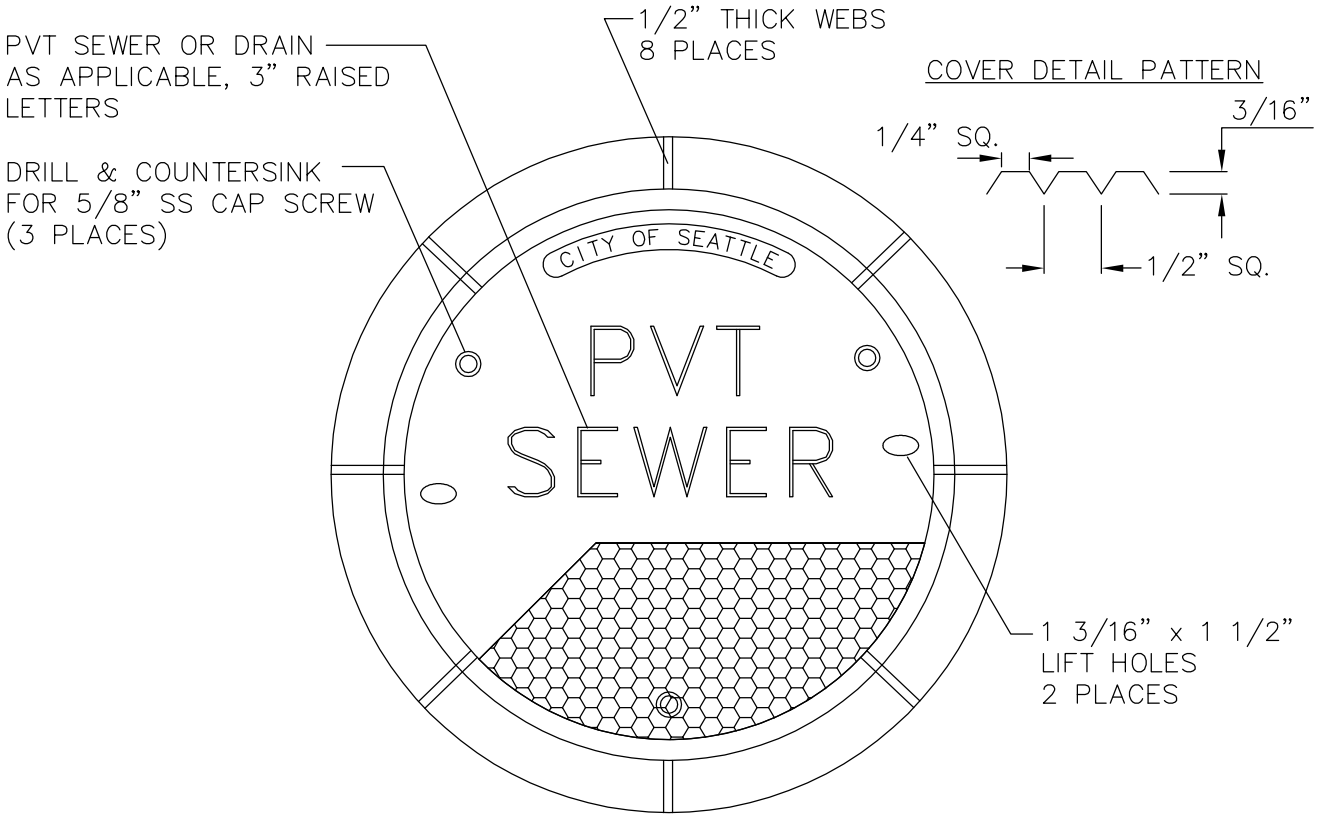

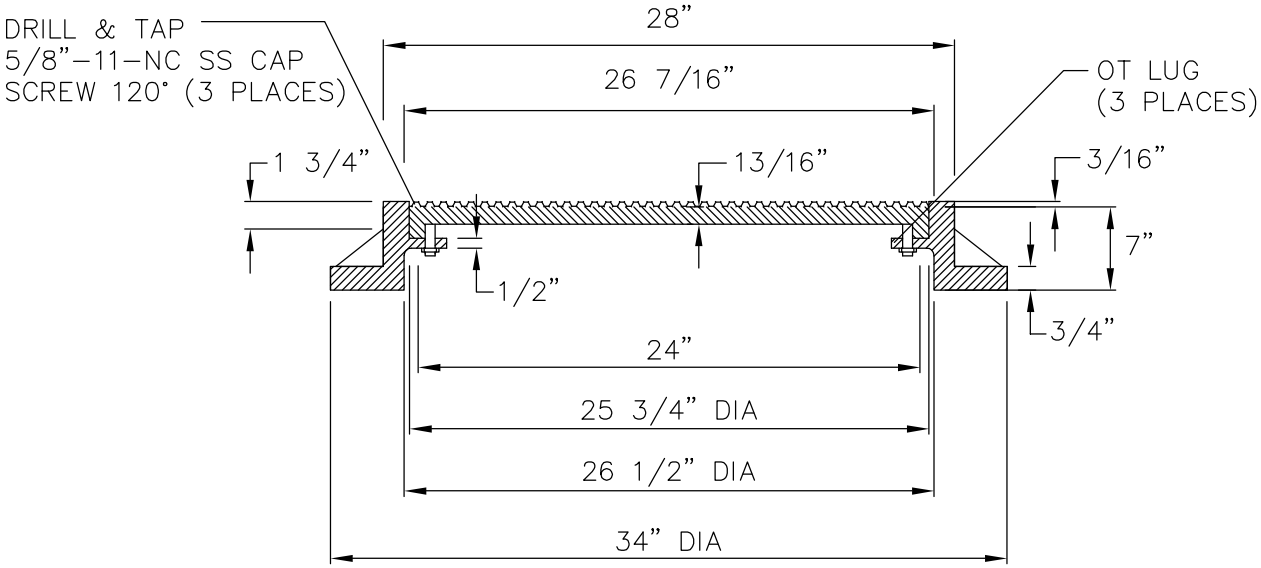

MATERIALS
FRAME: CAST IRON ASTM A48 CL. 30
COVER: DUCTILE IRON ASTM A536 CL 80-55-06
APPROX WT: RING-230 LBS, COVER-140 LBS
RATING: H-20
USE OLYMPIC FOUNDRY INC. RING AND COVER OR EQUIVALENT

City of Seattle		***OLYMPIC FOUNDRY INC.*** ***24"x7" SEATTLE 3-BOLT LOCKING*** ***MIANTENANCE HOLE RING AND COVER***