CITY OF SEATTLE

ORDINANCE _____

Council Bill_____

AN ORDINANCE relating to the Seattle Fire Code, adopting as the Seattle Fire Code the 2012 edition of the International Fire Code with some exceptions, amending and adding various provisions to that code; amending Section 22.600.020 of the Seattle Municipal Code; and repealing Sections 2-44 of Ordinance 123393.

BE IT ORDAINED BY THE CITY OF SEATTLE AS FOLLOWS:

Section 1. The 2012 International Fire Code, along with Appendixes B, D, E, F, G, H and I as published by the International Code Council, Inc., one copy of which is filed with the City Clerk in Clerk File 313133, is hereby adopted by reference.

Section 2. Section 22.600.020 of the Seattle Municipal Code is amended as follows:

22.600.020 The Seattle Fire Code

The Seattle Fire Code consists of:

1. the ((~~2009~~)) 2012 International Fire Code, along with Appendices B, D, E, F, G, H, and I ((~~and J~~)), all as published by the International Code Council, Inc., one copy of which is filed with the City Clerk in Clerk File ((~~310922~~)) 313133;

2. the amendments to the ((~~2009~~)) 2012 International Fire Code and to Appendices B, D, E, F, G, H, and I, ((~~and J~~)), adopted by Council by ordinance, introduced as Council Bill ((~~116918;~~)) 117844; and

3. the standards referenced in Chapter ((~~47~~)) 80 of the ((~~2009~~)) 2012 International Fire Code, including those standards added and NFPA Standards ((~~58,~~)) 130, and 502 that are further amended by Council by ordinance, introduced as Council Bill ((~~116918~~)) 117844. One copy of

each amended standard is on file with the City Clerk in Clerk Files ((~~310924, 310925, and 310923~~)) 310925 and 313144.

Wherever in this ordinance there is a conflict between metric units of measurement and English units, the English units govern.

Section 3. Chapter 1 of the 2012 International Fire Code is amended as follows:

CHAPTER 1

SCOPE AND ADMINISTRATION

Part 1—GENERAL PROVISIONS

SECTION 101

SCOPE AND GENERAL REQUIREMENTS

[A] 101.1 Title. These regulations shall be known as the *Seattle Fire Code* ((~~of [NAME OF JURISDICTION]~~)), hereinafter referred to as "this code."

Throughout this code, where references are made to the *International Building Code*, *International Residential Code*, *International Mechanical Code*, *International Fuel Gas Code*, and the *International Existing Building Code*, those references mean those codes with Seattle amendments. Where NFPA 70 is referenced, it means the *Seattle Electrical Code*, which is the *National Electrical Code* with Seattle amendments.

[A] 101.2 Scope. This code establishes regulations affecting or relating to structures, processes, premises, vehicles, *vessels*, and safeguards regarding:

1. The hazard of fire and explosion arising from the storage, handling or use of structures, materials or devices;
2. Conditions hazardous to life, property or public welfare in the occupancy of structures, vehicles, *vessels*, or premises;
3. Fire hazards in the structure, vehicles, *vessels*, or on the premises from occupancy or operation;
4. Matters related to the construction, extension, repair, alteration or removal of fire suppression or alarm systems; and
5. Conditions affecting the safety of fire fighters and emergency responders during emergency operations.

[A] 101.2.1 Appendices. Provisions in the appendices ((~~shall~~)) do not apply unless specifically adopted.

[A] 101.3 Intent. The purpose of this code is to establish the minimum requirements consistent with nationally recognized good practice for providing a reasonable level of life safety and property protection from the hazards of fire, explosion or dangerous conditions in new and existing buildings, structures, ((~~and~~))premises, vehicles, and *vessels* and to provide safety to fire fighters and emergency responders during emergency operations.

This code is enacted as an exercise of the police power of the City of Seattle to protect the public peace, health, safety and welfare, and its provisions shall be liberally construed to accomplish these purposes. The express purpose of this code is to promote the health, safety and welfare of the general public, and not to create or otherwise establish or designate any particular

class or group of persons who will or should be especially protected or benefitted by the terms of this code or ordinance.

The specific intent of this code is to place the obligation of complying with its requirements upon the *owners* or occupiers of premises, buildings, vehicles, *vessels*, and structures within its scope. No provision or term used in this code is intended to impose any duty whatsoever upon the city, or any of its officers or employees, for whom the implementation or enforcement of this code is discretionary, not mandatory.

* * *

101.6 Point of information or code interpretation. Text marked "Point of Information" or "Code Interpretation" in the *Seattle Fire Code* is for guidance only and does not have the force of law.

SECTION 102

APPLICABILITY

[A] 102.1 Construction and design provisions. The construction and design provisions of this code ((~~shall~~))apply to:

1. Structures, facilities and conditions arising after the adoption of this code.
2. Existing structures, facilities and conditions not legally in existence at the time of adoption of this code.
3. Existing structures, facilities and conditions when required in Chapter 11.
4. Existing structures, facilities and conditions which, in the opinion of the *fire code official*, constitute a distinct hazard to life or property.

* * *

[A] 102.5 Application of residential code. ((~~Where~~)) If structures are designed and constructed in accordance with the *International Residential Code*, the provisions of this code ((~~shall~~)) apply as follows:

1. Construction and design provisions: Provisions of this code pertaining to the exterior of the structure ((~~shall~~)) apply including, but not limited to, premises identification, fire apparatus access and water supplies. ((~~Where~~)) If interior or exterior systems or devices are installed, construction permits required by Section 105.7 of this code ((~~shall~~)) also apply.
2. Administrative, operational and maintenance provisions: All such provisions of this code ((~~shall~~)) apply.

* * *

[A] 102.7 Referenced codes and standards. The codes and standards referenced in this code shall be those that are listed in Chapter 80, including amendments adopted by Council by ordinance, and such codes and standards shall be considered part of the requirements of this code to the prescribed extent of each such reference and as further regulated in Sections 102.7.1 and 102.7.2.

* * *

Part 2—AMINISTRATIVE PROVISIONS

SECTION 103

DEPARTMENT OF FIRE PREVENTION

* * *

[A] 103.2 Appointment. ((~~The~~)) A *fire code official*, other than the fire chief, shall be appointed by the chief appointing authority of the jurisdiction; and the *fire code official*, other than the fire chief, shall not be removed from office except for cause and after full opportunity to be heard on specific and relevant charges by and before the appointing authority.

* * *

[A] 103.4 Liability. Nothing contained in this code is intended to, nor shall be construed to, create or form the basis for any liability on the part of the city, its officers, employees or agents, for any injury or damage resulting from the failure of the owner or occupier of premises, buildings, structures, vehicles or *vessels*, to comply with this code, or for any injury or damage caused by any act or omission on the part of the city by its officers, employees or agents in the course of implementing or enforcing this code.

Any lawsuit brought against the city, or its officers, or employees because of acts or omissions in the implementation or enforcement of this code, or other pertinent laws, ordinances, or regulations implemented through the enforcement of this code or enforced by the *fire code official*, shall, as provided by Seattle Municipal Code chapter 4.64, be defended by the City, and any resulting judgment or settlement shall be assumed or paid by the City as provided by Chapter 4.64 and other relevant sections of the *Seattle Municipal Code*.

Limited public funds are available for the implementation and enforcement of this code. The issuance of permits, reviews of permit applications, and inspections conducted pursuant to this code are spot checks designed to encourage compliance, and are not representations, guarantees,

or assurances that permits, or work undertaken pursuant to issuance of permits, comply with any applicable codes.

((~~The *fire code official*, member of the board of appeals, officer or employee charged with the enforcement of this code, while acting for the jurisdiction, in good faith and without malice in the discharge of the duties required by this code or other pertinent law or ordinance, shall not thereby be rendered liable personally, and is hereby relieved from all personal liability for any damage accruing to *persons* or property as a result of an act or by reason of an act or omission in the discharge of official duties.~~))

~~**[A] 103.4.1 Legal defense.** Any suit instituted against any officer or employee because of an act performed by that officer or employee in the lawful discharge of duties and under the provisions of this code shall be defended by the legal representative of the jurisdiction until the final termination of the proceedings. The *fire code official* or any subordinate shall not be liable for costs in an action, suit or proceeding that is instituted in pursuance of the provisions of this code; and any officer of the department of fire prevention, acting in good faith and without malice, shall be free from liability for acts performed under any of its provisions or by reason of any act or omission in the performance of official duties in connection therewith.~~))

SECTION 104

GENERAL AUTHORITY AND RESPONSIBILITIES

[A] 104.1 General. The *fire code official* is hereby authorized to enforce the provisions of this code and shall have the authority to render interpretations of this code, and to adopt policies, procedures, rules and regulations in order to carry out the provisions of this code and clarify the

application of its provisions. Such interpretations, policies, procedures, rules and regulations shall be in compliance with the intent and purpose of this code and shall not have the effect of waiving requirements specifically provided for in this code.

* * *

[A] 104.3 Right of entry. Whenever it is necessary to make an inspection to enforce the provisions of this code, or whenever the *fire code official* has reasonable cause to believe that there exists in a building or upon any premises any conditions or violations of this code which make the building or premises unsafe, dangerous or hazardous, the *fire code official* shall have the authority to enter the building or premises at all reasonable times to inspect or to perform the duties imposed upon the *fire code official* by this code. If such building or premises is occupied, the *fire code official* shall present credentials to the occupant and request entry. If such building or premises is unoccupied, the *fire code official* shall first make a reasonable effort to locate the *owner* or other *person* having charge or control of the building or premises and request entry. If entry is refused, the *fire code official* has recourse to every remedy provided by law to secure entry.

104.3.1 Owner consent. With the consent of the *owner* or occupier of a building, premises, *vehicle*, or *vessel*, or pursuant to a lawfully issued warrant, the *fire code official* may enter any building, premises, *vehicle*, or *vessel* at any reasonable time to inspect or to perform the duties authorized by this code.

[A] 104.3.((~~1~~))**2 Warrant.** ((~~When the *fire code official* has first obtained a proper inspection warrant or other remedy provided by law to secure entry, an~~)) An *owner* or occupant or

person having charge, care or control of the building or premises shall not fail or neglect, after ((~~proper request is made as herein provided,~~)) a warrant is presented, to permit entry therein by the *fire code official* for the purpose of inspection and examination pursuant to this code.

[A] 104.4 Identification. The *fire code official* shall carry proper identification when inspecting structures or premises in the performance of duties under this code.

[A] 104.5 Notices and orders. The *fire code official* is authorized to issue such notices or orders as are required to affect compliance with this code in accordance with Sections 109 ((~~.1 and 109.2~~)),110, and 111. The *fire code official* shall serve the responsible party with a copy of violations, correction letters, and orders issued.

[A] 104.6 Official records. The *fire code official* shall keep official records as required by Sections 104.6.1 through 104.6.4. Such official records shall be retained for not less than five years or for as long as the structure or activity to which such records relate remains in existence, unless otherwise provided by other laws or regulations.

[A] 104.6.1 Approvals. A record of approvals shall be maintained by the *fire code official* and shall be available for public inspection during business hours in accordance with applicable laws.

[A] 104.6.2 Inspections. The *fire code official* shall keep a record of ((~~each inspection made, including notices~~)) violations, correction letters, and orders issued, showing the findings and disposition of each.

[A] 104.6.3 Fire records. The fire department shall keep a record of fires occurring within its jurisdiction and of facts concerning the same, including statistics as to the extent of such fires

and the damage caused thereby, together with other information as required by the *fire code official*.

[A] 104.6.4 Administrative. Application for modification, alternative methods or materials and the final decision of the *fire code official* on any such application shall be in writing and shall be officially recorded in the permanent records of the *fire code official*.

* * *

[A] 104.10 Fire investigations. The fire code official, or the fire department ((~~or other responsible authority~~)) shall have the authority to investigate the cause, origin and circumstances of any fire, explosion or other hazardous condition. Information that could be related to trade secrets or processes shall not be made part of the public record, except as directed by a court of law.

104.10.1 Authority of Fire Department Fire Investigators to Exercise Powers of Police Officers. Members of the fire department Fire Investigation Unit (FIU) that have been granted Arson Investigator/Special Police Officer (SPO) commissions by the Chief of the Seattle Police Department in accordance with City of Seattle Ordinance 109759 shall have the powers described in the ordinance and other powers described in this code.

Fire Investigation Unit (FIU) fire investigators are authorized to take immediate charge of all physical evidence relating to the cause of the fire if it appears that such fire is of incendiary or undetermined origin.

[A] 104.10.((~~1~~))2 **Assistance from other agencies.** Police and other enforcement agencies shall have authority to render necessary assistance in the investigation of fires when requested to do so.

* * *

[A] 104.11.2 Obstructing operations. No *person* shall obstruct the operations of the fire department in connection with extinguishment, or control or investigation of any fire, or actions relative to other emergencies, or disobey any lawful command of the fire chief or officer of the fire department in charge of the emergency, or any part thereof, or any lawful order of a police officer assisting the fire department.

* * *

104.12 Vehicle impoundment and removal. The *fire code official* may order the owner or operator to remove, or may request that the Seattle Police Department impound a vehicle under the following conditions:

1. The vehicle poses an immediate hazard to public safety; or
2. The vehicle is transporting hazardous materials, and is left unattended on a residential street or within 500 feet (152 400 mm) of any building containing a Group A, R, E or I occupancy, including, but not limited to, any dwelling apartment, hotel, day care, school, hospital or health care facility; or
3. The vehicle contains or is carrying hazardous materials, or flammable or combustible liquids or gases, and is left unattended while transferring such materials, liquids or gases by means of hose line.

104.13 Prohibited uses, sales devices. The *fire code official* may prohibit the use, display or sale of any device, material or object that is designed to be used in such a manner as to violate any provisions of this code, or if the use or sale of such constitutes a distinct hazard to life or property. Any materials shown by nationally recognized fire test to have a life hazard greater than that indicated by the manufacturer's literature and controlled by building code interior finish regulations or fire code decorative material regulations is either prohibited or shall be installed or used with such additional fire safety features as are necessary to substantially reduce the life hazard.

104.14 Standby fire personnel and fire watch personnel. The *fire code official* has the authority to require, at no cost to the jurisdiction, standby fire personnel and/or fire watch personnel if in the opinion of the *fire code official* potentially hazardous conditions or reductions in a life safety feature exist. The *owner*, agent, or lessee shall provide one or more qualified persons, as required and approved, to be on duty. Such standby fire personnel or fire watch personnel shall be subject to the *fire code official's* orders at all times and remain on duty during the times such places are open to the public, when such activity is being conducted, or as required by the *fire code official*. Fire watch personnel are not employees or agents of the city.

SECTION 105

PERMITS AND CERTIFICATES

[A] 105.1 General. Permits shall be in accordance with Sections 105.1.1 through 105.7.14. Certificates issued by the *fire code official* are revocable in accordance with the provisions of section 105.5.

[A] 105.1.1 Permits required. Any property owner or authorized agent who intends to conduct an operation or business, or install or modify systems and equipment which is regulated by this code, or to cause any such work to be done, shall first make application to the *fire code official* and obtain the required permit. Permit fees, if any, may be required to be paid prior to issuance of the permit. Failure to pay the required permit fee may result in cancellation of the permit.

* * *

[A] 105.2 Application. Application for a permit required by this code shall be made to the *fire code official* in such form and detail as prescribed by the *fire code official*. Applications for permits shall be accompanied by such plans as prescribed by the *fire code official*.

[A] 105.2.1 Refusal to issue permit. If the application for a permit describes ((~~a use~~)) an activity that does not conform to the requirements of this code and other pertinent laws and ordinances, the *fire code official* ((~~shall~~)) may not issue a permit, ((~~but shall~~)) and may return the application to the applicant with the refusal to issue such permit. Such refusal shall, when requested, be in writing and shall contain the reasons for refusal.

[A] 105.2.2 Inspection authorized. Before a new operational permit is *approved*, the *fire code official* is authorized to inspect the receptacles, vehicles, buildings, devices, premises,

storage spaces or areas to be used to determine compliance with this code or any operational constraints required.

((~~**[A] 105.2.3 Time limitation of application.** An application for a permit for any proposed work or operation shall be deemed to have been abandoned 180 days after the date of filing, unless such application has been diligently prosecuted or a permit shall have been issued; except that the *fire code official* is authorized to grant one or more extensions of time for additional periods not exceeding 90 days each. The extension shall be requested in writing and justifiable cause demonstrated.~~))

[A] 105.2.((**4**))**3 Action on application.** The *fire code official* shall examine or cause to be examined applications for permits and amendments thereto within a reasonable time after filing. If the application or the *construction documents* do not conform to the requirements of pertinent laws, the *fire code official* ((~~shall~~)) may reject such application in writing, stating the reasons therefor. If the *fire code official* is satisfied that the proposed work or operation conforms to the requirements of this code and laws and ordinances applicable thereto, the *fire code official* shall issue a permit ((~~therefor~~)) as soon as practicable.

[A] 105.3 Conditions of a permit. The *fire code official* may condition any permit, increasing or decreasing the scope of activity, and/or specifying fire safety provisions in addition to those established by this code, if the *fire code official* deems such conditions necessary to provide reasonable public safety. A permit shall constitute permission to maintain, store or handle materials; or to conduct processes which produce conditions hazardous to life or property; or to install equipment utilized in connection with such activities; or to install or modify any *fire*

protection system or equipment or any other construction, equipment installation or modification in accordance with the provisions of this code where a permit is required by Section 105.6 or 105.7. Such permission shall not be construed as authority to violate, cancel or set aside any of the provisions of this code or other applicable regulations or laws of the jurisdiction.

* * *

[A] 105.3.3 Occupancy prohibited before approval. The building or structure shall not be occupied prior to the *fire code official* issuing a permit and conducting associated inspections indicating the applicable provisions of this code have been met.

105.3.3 Point of Information

Approval to occupy a building or structure is granted by the Department of Planning and Development through issuance of a Certificate of Occupancy or Temporary Certificate of Occupancy. A Fire Department recommendation to issue an occupancy certificate is conditioned upon applicable provisions of this code being met.

[A] 105.3.4 ((~~Conditional permits~~)) Temporary certificate of occupancy. ((~~Where permits are required and upon the request of a permit applicant, t~~)) The *fire code official* is authorized to recommend to the *building code official* that a Temporary Certificate of Occupancy be issued granting permission ((~~a conditional permit~~)) to occupy the premises or portion thereof before the entire work or operations on the premises is completed, provided that such portion or portions will be occupied safely prior to full completion or installation of equipment and

operations without endangering life or public welfare. The *fire code official* shall notify the ((~~permit applicant~~)) *building code official* in writing of any limitations or restrictions necessary to keep the ((~~permit~~)) occupied area safe. The holder of a ((~~conditional permit~~)) temporary certificate of occupancy shall proceed only to the point for which approval has been given, at the permit holder's own risk and without assurance that approval for the occupancy or the utilization of the entire premises, equipment or operations will be granted.

* * *

105.3.9 Liability Insurance. If liability insurance is required by any section of this code as a permit condition or for a license, the applicant shall maintain continuously on file with the *fire code official* for the entire period of the licensed or permitted activity, evidence of "Commercial General Liability" ("CGL") insurance coverage with a minimum limit of liability of $2,000,000 combined single limit per occurrence bodily injury and property damage subject to no deductible. Such evidence of insurance coverage shall be provided on an Acord Certificate of Liability Insurance or equivalent ("Certificate") issued to "Seattle Fire Department, 301 2nd Ave S., Seattle, WA 98104." "The City of Seattle" shall be an additional insured under CGL insurance on a primary and non-contributory basis per ISO Endorsement CG 20 26 or equivalent and a copy of the actual CGL policy provision documenting this must be attached to the Certificate. The *fire code official* may increase or decrease the above-stated minimum limits of liability. The purpose of the requirement is to insure that members of the public and the City will be compensated for losses caused by bodily injury or property

damage resulting from the negligent acts of the licensees, permittees, or their agents or employees.

If the issuance of a license or permit is conditioned upon obtaining CGL insurance by the applicant for such permit, the policy shall be:

1. Issued by a company or companies authorized to do business as an insurer in Washington State pursuant to the provisions of RCW Title 48;
2. Issued for the purpose of complying with the conditions and requirements of Section 105 of the *Seattle Fire Code*;
3. Canceled only on at least 30 days prior written notice to the *fire code official*, except 10 days notice cancellation for nonpayment of premium is allowed, or as specified in RCW 48.18.290, if applicable; and
4. Subject to approval as to sufficiency and form by the City's Risk Management Division at the request of the *fire code official*.

[A] 105.4 Construction documents. *Construction documents* shall be in accordance with this section.

[A] 105.4.1 Submittals. *Construction documents* and supporting data shall be submitted in ((~~two~~)) one or more sets with each application for a permit and in such form and detail as required by the *fire code official*. The *construction documents* shall be prepared by a registered design professional where required by the ((~~statutes of the jurisdiction in which the project is to be constructed~~)) *fire code official*.

Exception: The *fire code official* is authorized to waive the submission of *construction documents* and supporting data not required to be prepared by a registered design professional if it is found that the nature of the work applied for is such that review of *construction documents* is not necessary to obtain compliance with this code.

[A] 105.4.1.1 Examination of documents. The *fire code official* ((~~shall~~)) may examine or cause to be examined the accompanying *construction documents* and shall ascertain by such examinations whether the work indicated and described is in accordance with the requirements of this code.

* * *

[A] 105.4.4.1 Phased approval. The *fire code official* is authorized to issue a permit for the construction of part of a structure, system or operation before the *construction documents* for the whole structure, system or operation have been submitted, ((~~provided that~~)) if adequate information and detailed statements have been filed complying with pertinent requirements of this code. The holder of such permit for parts of a structure, system or operation shall proceed at the holder's own risk ((~~with the building operation~~)) and without assurance that a permit for the entire structure, system or operation will be granted.

* * *

((~~[A] **105.4.6 Retention of construction documents.** One set of *construction documents* shall be retained by the *fire code official* for a period of not less than 180 days from date of completion of the permitted work, or as required by state or local laws. One set of *approved*~~

~~*construction documents* shall be returned to the applicant, and said set shall be kept on the site of the building or work at all times during which the work authorized thereby is in progress.~~))

[A]105.5 Revocation of permits and certificates. Revocation of permits and certificates shall be in accordance with this section. ((~~The *fire code official* is authorized to revoke a permit issued under the provisions of this code when it is found by inspection or otherwise that there has been a false statement or misrepresentation as to the material facts in the application or *construction documents* on which the permit or approval was based including, but not limited to, any one of the following:~~

~~1. The permit is used for a location or establishment other than that for which it was issued.~~

~~2. The permit is used for a condition or activity other than that listed in the permit.~~

~~3. Conditions and limitations set forth in the permit have been violated.~~

~~4. There have been any false statements or misrepresentations as to the material fact in the application for permit or plans submitted or a condition of the permit.~~

~~5. The permit is used by a different *person* or firm than the name for which it was issued.~~

~~6. The permittee failed, refused or neglected to comply with orders or notices duly served in accordance with the provisions of this code within the time provided therein.~~

~~7. The permit was issued in error or in violation of an ordinance, regulation or this code.~~))

105.5.1 Nonemergency revocations, suspensions and denials of renewals. In accordance with applicable law, the *fire code official* may revoke or suspend a permit or certificate or deny a request to renew any permit or certificate upon evidence submitted to the *fire code official* that conditions or circumstances have changed so that continued use of the permit or

certificate would be unsafe or would violate this code. Such conditions or circumstances include, but are not limited to:

1. The permit has been used by a person other than the person to whom the permit was issued,
2. The permit has been used for a location other than that for which it was issued,
3. Any of the conditions or limitations in the permit or the code have been violated,
4. The permittee failed, refused or neglected to comply within the time provided with orders or notices duly served in accordance with the provisions of this code,
5. There has been a false statement or misrepresentation as to a material fact in the application or plans on which the permit or application was based, or
6. The permit was issued in error or in violation of any code, regulation or other law.

105.5.1.1 Notification. The permit or certificate holder shall be notified in writing no later than five business days prior to the revocation, suspension or denial of a request to renew such permit or certificate.

105.5.1.2 Requesting a hearing. The permit or certificate holder may request in writing a hearing before the *fire code official* for reconsideration of the decision to revoke, suspend or deny renewal. The request shall be filed with the *fire code official* by 5 o'clock p.m. of the fifth business day following service of the notice.

105.5.1.3 Hearing. The hearing, if one is requested, shall be held no later than five business day after receipt of the written request.

105.5.1.4 Final decision. The *fire code official* shall issue a final decision, in writing, sustaining, modifying or withdrawing the initial decision to revoke, suspend or deny a request to renew the permit or certificate no later than the fifth business day following such hearing. Further appeals shall be in accordance with Section 108 of this code.

105.5.2 Emergency Revocations, suspensions and denials of requests to renew. The fire *code official* may revoke, suspend or deny a request to renew a permit or certificate in emergency situations, without providing prior notice to the permit or certificate holder, if an imminent fire, life-safety, or other hazard regulated by this code exists, and failure to take immediate action may cause imminent harm to humans, domestic animals, livestock, wildlife, or to the immediate or neighboring property, lands or premises.

105.5.2.1 Surrendering permits or certificates. If such emergency is found to exist and if the fire code official revokes, suspends, or refuses to renew a permit or certificate, all certificates and permits shall be surrendered to the *fire code official* or his/her authorized representative upon demand.

105.5.2.2 Suspending activities. The activities sanctioned by the suspended or revoked certificates or permits shall be suspended until the *fire code official* finds the emergency no longer exists and reinstates the permit or certificate.

105.5.2.3 Requesting an appeal. Persons whose permits or certificates have been revoked or suspended without notice may appeal the *fire code official's* action by filing a written notice of appeal to the *fire code official* by 5 o'clock p.m. of the fifth business day

following such revocation, suspension or denial or a request to renew a permit or certificate.

105.5.2.4 Hearing. The hearing with the *fire code official* shall be no later than five business days from the receipt of such written appeal.

105.5.2.5 Final decision. The *fire code official* shall issue a final decision in writing, sustaining, modifying or withdrawing the initial decision to revoke, suspend or deny a request to renew the certificate or permit no later than the fifth business day following such hearing.

105.5.2.6 Further appeals. Further appeals shall be in accordance with Section 108 of this code.

[A] 105.6 Required operational permits. The *fire code official* is authorized to issue operational permits for the operations set forth in Sections 105.6.1 through 105.6.((~~46.~~))52.

[A] 105.6.1 Aerosol products. An operational permit is required to manufacture, store or handle an aggregate quantity of Level 2 or Level 3 aerosol products in excess of 500 pounds (227 kg) net weight.

[A] 105.6.2 Amusements buildings. An operational permit is required to operate a special amusement building.

[A] 105.6.3 Aviation facilities. An operational permit is required to use a Group H or Group S occupancy for aircraft servicing or repair and aircraft fuel-servicing vehicles. Additional permits required by other sections of this code include, but are not limited to, hot work, hazardous materials and flammable or combustible finishes.

105.6.4 Bonfires. An operational permit is required to ignite a bonfire.

[A] 105.6.((4))5 Carnivals and fairs. ((~~An operational permit is required to conduct a carnival or fair.~~)) See 105.6.38, Outdoor Assembly Event.

[A] 105.6.((~~5~~))6 Cellulose nitrate film. An operational permit is required to store, handle or use cellulose nitrate film in a Group A occupancy.

[A] 105.6.((~~6~~))7 Combustible dust-producing operations. An operational permit is required to operate a grain elevator, flour starch mill, feed mill, or a plant pulverizing aluminum, cola, cocoa, magnesium, spices or sugar, or other operations producing *combustible dusts* as defined in Chapter 2.

[A] 105.6.((~~7~~))8 Combustible fibers. An operational permit is required for the storage and handling of *combustible fibers* in quantities greater than 100 cubic feet (2.8 m^3).

Exception: A permit is not required for agricultural storage.

105.6.9 Combustible storage. An operational permit is required to store in any building or upon any premises class IV or high hazard commodities in excess of 2,500 cubic feet gross volume.

[A] 105.6.((~~8~~))10 Compressed gases. An operational permit is required for the storage, use or handling at *normal temperature and pressure* (NTP) of compressed gases in excess of the amounts listed in Table 105.6.10 ((~~8~~)).

Exception: Vehicles equipped for and using *compressed gas* as a fuel for propelling the vehicle.

TABLE 105.6.((~~8~~))10
PERMIT AMOUNTS FOR COMPRESSED GASES

TYPE OF GAS	AMOUNT (cubic feet at NTP)
Corrosive	200
Flammable (except *cryogenic fluids* and liquefied petroleum gases)	200
Highly toxic	Any Amount
Inert and simple asphyxiant	6,000
Oxidizing (including oxygen)	504
Pyrophoric	Any Amount
Toxic	Any Amount

For SI: 1 cubic foot = 0.02832 m^3.

[A] 105.6.((~~9~~))11 Covered and open mall buildings. An operational permit is required for:

1. The placement of retail fixtures and displays, concession equipment, displays of highly combustible goods and similar items in the mall.
2. The display of liquid- or gas-fired equipment in the mall.
3. The use of open-flame or flame-producing equipment in the mall.
4. The use of covered mall buildings for assembly purposes.

[A] 105.6.((~~10~~))12 Cryogenic fluids. An operational permit is required to produce, store, transport on site, use, handle or dispense cryogenic fluids in excess of the amounts listed in Table 105.6.((~~10~~))12.

Exception: Permits are not required for vehicles equipped for and using *cryogenic fluids* as a fuel for propelling the vehicle or for refrigerating the lading.

TABLE 105.6.((~~10~~))12
PERMIT AMOUNTS FOR CRYOGENIC FLUIDS

TYPE OF CRYOGENIC FLUID	INSIDE BUILDING (gallons)	OUTSIDE BUILDING (gallons)
Flammable	More than 1	60
Inert	60	500
Oxidizing (includes oxygen)	10	50
Physical or health hazard not indicated above	Any Amount	Any Amount

For SI: 1 gallon = 3.785 L.

[A] 105.6.((~~11~~))13 Cutting and welding. An operational permit is required to conduct cutting or welding operations within the jurisdiction. See 105.6.27, Hot Work Operations.

[A] 105.6.((~~12~~))14 Dry Cleaning. An operational permit is required to engage in the business of dry cleaning or to change to a more hazardous cleaning solvent used in existing dry cleaning equipment.

[A] 105.6.((~~13~~))15 Exhibits and trade shows. An operational permit is required to operate exhibits and trade shows.

[A] 105.6.((~~14~~))16 Explosives. An operational permit is required for the ((~~manufacture,~~)) storage, handling, sale or use of any quantity of *explosives*, *explosive materials*, fireworks or pyrotechnic special effects within the scope of Chapter 56.

Exception: Storage in Group R-3 occupancies of smokeless propellant, black powder and small arms primers for personal use, not for resale and in accordance with Section 5606.

105.6.16 Point of Information

The manufacture of *explosives* is prohibited within Seattle City limits.

[A] 105.6.((~~15~~))**17 Fire hydrant and valves.** An operational permit is required to use or operate fire hydrant or valves intended for fire suppression purposes which are installed on water systems and accessible to a fire apparatus access road that is open to or generally used by the public.

Exception: A permit is not required for authorized employees of the water company that supplies the system or the fire department to use or operate fire hydrants or valves.

[A] 105.6.((~~16~~))**18 Flammable and combustible liquids.** An operational permit is required:

1. To use or operate a pipeline for the transportation within facilities of flammable or *combustible liquids*. This requirement shall not apply to the off-site transportation in pipelines regulated by the Department of Transportation (DOTn) nor does it apply to piping systems.
2. To store, handle or use Class I liquids in excess of 5 gallons (19 L) in a building or in excess of 10 gallons (37.9 L) outside of a building, except that a permit is not required for the following:
   2.1. The storage or use of Class I liquids in the fuel tank of a motor vehicle, aircraft, motorboat, mobile power plant or mobile heating plant, or storage of *approved* portable motor boat fuel containers of 6 gallons or less individual capacity and 12 gallons aggregate capacity, unless such storage, in the opinion of the *fire code official*, would cause an unsafe condition.

2.2. The storage or use of paints, oils, varnishes or similar flammable mixtures when such liquids are stored for maintenance, painting or similar purposes for a period of not more than 30 days.

3. To store, handle or use Class II or Class IIIA liquids in excess of 25 gallons (95 L) in a building or in excess of 60 gallons (227 L) outside a building, except for fuel oil used in connection with oil-burning equipment.

4. To store, handle or use Class IIIB liquids in tanks or portable tanks for fueling motor vehicles at motor Fuel-dispensing facilities or where connected to fuel-burning equipment.

   Exception: Fuel oil and used motor oil used for space heating or water heating.

5. To remove Class I or II liquids from an underground storage tank used for fueling motor vehicles by any means other than the *approved*, stationary on-site pumps normally used for dispensing purposes.

6. To operate tank vehicles, equipment, tanks, plants, terminals, wells, fuel-dispensing stations, refineries, distilleries and similar facilities where flammable and *combustible liquids* are produced, processed, transported, stored, dispensed or used.

7. To place temporarily out of service (for more than 90 days) an underground, protected above-ground or above-ground flammable or *combustible liquid* tank.

8. To change the type of contents stored in a flammable or *combustible liquid* tank to a material that poses a greater hazard than that for which the tank was designed and constructed.

9. To manufacture, process, blend or refine flammable or *combustible liquids*.

10. To engage in the dispensing of liquid fuels into the fuel tanks of motor vehicles at commercial, industrial, governmental or manufacturing establishments.

11. To utilize a site for the dispensing of liquid fuels from tank vehicles into the fuel tanks of motor vehicles, marine craft and other special equipment at commercial, industrial, governmental or manufacturing establishments.

12. To engage in the business of removing, abandoning or otherwise disposing of residential heating oil tanks.

[A] 105.6.((~~17~~))**19 Floor finishing.** An operational permit is required for floor finishing or surfacing operations exceeding 350 square feet (33 m^2) using Class I or Class II liquids.

[A] 105.6.((~~18~~))**20 Fruit and crop ripening.** An operational permit is required to operate a fruit- or crop-ripening facility or conduct a fruit-ripening process using ethylene gas.

[A] 105.6.((~~19~~))**21 Fumigation and insecticidal fogging.** An operational permit is required to operate a business of fumigation or insecticidal fogging and to maintain a room, vault, freight container, or chamber in which a toxic or flammable fumigant is used.

[A] 105.6.((~~20~~))**22 Hazardous materials.** An operational permit is required to store, transport on site, dispense, use or handle hazardous materials in excess of the amounts listed in Table 105.6.((~~20~~))22.

105.6.23 Hazardous materials stabilization. A temporary permit is required to stabilize potentially unstable (reactive) hazardous materials.

[A] 105.6.((~~21~~))24 HPM facilities. An operational permit is required to store, handle or use hazardous production materials.

105.6.25 Helicopter lifts. A temporary permit is required to move suspended loads via helicopter over populated areas.

[A] 105.6.((~~22~~))26 High-piled storage. An operational permit is required to use a building or portion thereof as a *high piled storage area* exceeding 500 square feet (46 m^2).

TABLE 105.6.22 ((~~20~~))

PERMIT AMOUNTS FOR HAZARDOUS MATERIALS

TYPE OF MATERIAL	AMOUNT
Combustible liquids	See Section 105.6.16
Corrosive materials	
Gases	See Section 105.6.8
Liquids	55 gallons
Solids	1000 pounds
Explosive materials	See Section 105.6.14
Flammable materials	
Gases	See Section 105.6.8
Liquids	See Section 105.6.16
Solids	100 pounds
Highly toxic materials	
Gases	See Section 105.6.8
Liquids	Any Amount
Solids	Any Amount
Oxidizing materials	
Gases	See Section 105.6.8
Liquids	
Class 4	Any Amount
Class 3	1 gallon[a]
Class 2	10 gallons
Class 1	55 gallons
Solids	
Class 4	Any Amount
Class 3	10 pounds[b]
Class 2	100 pounds
Class 1	500 pounds

Organic peroxides	
Liquids	
Class I	Any Amount
Class II	Any Amount
Class III	1 gallon
Class IV	2 gallons
Class V	No Permit Required
Solids	
Class I	Any Amount
Class II	Any Amount
Class III	10 pounds
Class IV	20 pounds
Class V	No Permit Required
Pyrophoric materials	
Gases	Any Amount
Liquids	Any Amount
Solids	Any Amount
Toxic materials	
Gases	See Section 105.6.8
Liquids	10 gallons
Solids	100 pounds
Unstable (reactive) materials	
Liquids	
Class 4	Any Amount
Class 3	Any Amount
Class 2	5 gallons
Class 1	10 gallons
Solids	
Class 4	Any Amount
Class 3	Any Amount
Class 2	50 pounds
Class 1	100 pounds
Water-reactive materials	
Liquids	
Class 3	Any Amount
Class 2	5 gallons
Class 1	55 gallons
Solids	
Class 3	Any Amount
Class 2	50 pounds
Class 1	500 pounds

[A] 105.6.((~~23~~))<u>27</u> **Hot work operations.** An operational permit is required for hot work including, but not limited to:

1. Public exhibitions and demonstrations where hot work is conducted.

2. Use of portable hot work equipment inside a structure.

Exception: ((~~Work that is conducted under a construction permit.~~)) Approved self-contained torch assemblies or similar appliances using LP-gas in accordance with the following:

a. LP-gas cylinders that comply with UL 147A, Standard for Nonrefillable (Disposable) Type Fuel Gas Cylinder Assemblies.

b. LP-gas cylinders that have a maximum water capacity of 2.7 lb (1.2 kg).

c. The maximum aggregate water capacity of LP-gas cylinders in storage (e.g. not connected for use) and use does not exceed 2.7 lb (1.2 kg) per control area.

3. Fixed-site hot work equipment such as welding booths.

4. Hot work conducted within a wildfire risk area.

5. Application of roof coverings with the use of an open-flame device.

6. Hot work on storage tanks, piping and associated systems containing or previously containing flammable or combustible liquids, or other hazardous materials that could present a fire or explosion hazard.

7. Hot work on *vessels*.

8.((~~6.~~)) When *approved*, the *fire code official* shall issue a permit to carry out a hot work program. This program allows *approved* personnel to regulate their facility's hot work operations. The *approved* personnel shall be trained in the fire safety aspects denoted in this chapter and shall be responsible for issuing permits requiring compliance with the requirements found in Chapter 35. These permits shall be issued only to their employees or hot work operations under their supervision.

[A] 105.6.((~~24~~))**28 Industrial ovens.** An operational permit is required for operation of industrials ovens regulated by Chapter 30.

[A] 105.6.((~~25~~))**29 Lumber yards and woodworking plants.** An operational permit is required for the storage or processing of lumber exceeding 100,000 board feet (8,333 ft^3) (236 m^3).

[A] 105.6.((~~26~~))**30 Liquid- or gas-fueled vehicles or equipment in assembly buildings.** An operational permit is required to display, operate or demonstrate liquid- or gas-fueled vehicles or equipment in assembly buildings.

[A] 105.6.((~~27~~))**31 LP-gas.** An operational permit is required for:

1. Storage and use of LP-gas.

Exceptions:

1. A permit is not required for individual containers with a 500-gallon (1893 L) water capacity or less or multiple container systems having an aggregate quantity not exceeding 500 gallons (1893 L), serving occupancies in Group R-3.
2. A permit is not required for LP-gas containers having a water capacity not exceeding 48 pounds [nominal 20 pounds (9 kg) LP-gas] connected to a LP-gas grill unless located at a public assembly or on a public way, or if used for commercial purposes.
3. A permit is not required for storage of up to three spare forklift containers each having a maximum individual water capacity of 104 pounds (10 gallons LP-gas).

2. Operation of cargo tankers that transport LP-gas.

[A] 105.6.((~~**28**~~))**32** **Magnesium.** An operational permit is required to melt, cast, heat treat or grind more than 10 pounds (4.54 kg) of magnesium.

105.6.33 Marine terminal and container freight stations. An annual operational permit is required to handle or temporarily locate containers, tanks, or cylinders of hazardous materials at marine terminals and container freight stations located within the Seattle City limits.

((~~**[A] 105.6.29 Miscellaneous combustible storage.** An operational permit is required to store in any building or upon any premises in excess of 2,500 cubic feet (71m3) gross volume of combustible empty packing cases, boxes, barrels or similar containers, rubber tires, rubber, cork or similar combustible material.~~))

[A] 105.6.((~~**30**~~))**34** **Open burning.** Open burning is prohibited in the City of Seattle. ((~~An operational permit is required for the kindling or maintaining of an open fire or a fire on any public street, alley, road, or other public or private ground. Instructions and stipulations of the permit shall be adhered to.~~

~~**Exception:** *Recreational fires.*~~))

[A] 105.6.((~~**31**~~))**35** **Open flames and torches.** An operational permit is required to remove paint with a torch; or to use a torch or open-flame device in a wildfire risk area.

[A] 105.6.((~~**32**~~))**36** **Open flames and candles.** An operational permit is required to use open flames or candles in connection with assembly areas, dining areas of restaurants or drinking establishments.

Exception: A separate open flame and candle permit is not required at a facility with a valid place of assembly permit.

[A] 105.6.((~~33~~))37 Organic coatings. An operational permit is required for any organic-coating manufacturing operation producing more than 1 gallon (4 L) of organic coating in one day.

105.6.38 Outdoor assembly event. An operational permit is required to operate an *outdoor assembly event*.

[A] 105.6.((~~34~~))39 Places of assembly. An operational permit is required to operate a place of *assembly* with an occupant load of 100 or more.

[A] 105.6.((~~35~~))40 Private fire hydrants. An operational permit is required for the removal from service, use or operation of private fire hydrants.

Exception: A permit is not required for private industry with trained maintenance personnel, private fire brigade or fire departments to maintain, test and use private fire hydrants.

[A] 105.6.((~~36~~))41 Pyrotechnic special effects material. An operational permit is required for use and handling of pyrotechnic special effects material.

[A] 105.6.((~~37~~))42 Pyroxylin plastics. An operational permit is required for storage or handling of more than 25 pounds (11 kg) of cellulose nitrate (pyroxylin) plastics, and for the assembly or manufacture of articles involving pyroxylin plastics.

[A] 105.6.((~~38~~))43 Refrigeration equipment. An operational permit is required to operate a mechanical refrigeration unit or system as regulated by Chapter 6.

Exception: Refrigeration systems that have a valid annual mechanical permit from the Department of Planning and Development.

[A] 105.6.((~~39~~))44 Repair garages and motor fuel-dispensing facilities. An operational permit is required for operation of repair garages, and automotive, marine and fleet motor fuel-dispensing facilities.

[A] 105.6.((~~40~~))45 Rooftop heliports. An operational permit is required for the operation of a rooftop heliport.

[A] 105.6.((~~41~~))46 Spraying or dipping. An operational permit is required to conduct a spraying or dipping operation utilizing flammable or *combustible liquids* or the application of combustible powders regulated by Chapter 24.

Exception: Mobile spray coaters licensed by, and meeting the requirements of, the Puget Sound Clean Air Agency.

105.6.46 Point of Information

A no-fee operational permit is required for spraying operations utilizing water-based paints in accordance with Chapter 24.

[A] 105.6.((~~42~~))47 Storage of tires, scrap tires and tire byproducts. An operational permit is required to establish, conduct or maintain storage of scrap tires and tire byproducts that exceeds 2,500 cubic feet (71 m^3) of total volume of scrap tires and for indoor storage of tires and tire byproducts.

105.6.48 Temporary assembly occupancy. An operational permit is required to use any building or structure, or portion thereof, other than established Group A occupancies for assembly purposes where the occupant load is more than 50 persons. Plans shall be submitted to the *fire code official* at least 30 days prior to the event where temporary *alterations* are made to the existing *means of egress*. The number of such permits for any building or structure, or portion thereof, is limited to one per quarter. Additional permits may be issued where application for a change of use for the building, or structure, or portion thereof, has been submitted to the Department of Planning and Development (DPD) with the approval of DPD.

[A] 105.6.((~~**43**~~))**49 Temporary membrane structures and tents.** See 105.7.15. ((~~An operational permit is required to operate an air-supported temporary membrane structure or a tent having an area in excess of 400 square feet (37 m2).~~

~~**Exceptions:**~~

~~1. Tents used exclusively for recreational camping purposes.~~

~~2. Tents open on all sides, which comply with all of the following:~~

~~2.1. Individual tents having a maximum size of 700 square feet (65 m2).~~

~~2.2. The aggregate area of multiple tents placed side by side without a fire break clearance of not less than 12 feet (3658 mm) shall not exceed 700 square feet (65 m2) total.~~

~~2.3. A minimum clearance of 12 feet (3658 mm) to structures and other tents shall be provided.~~))

[A] 105.6.((~~44~~))50 Tire-rebuilding plants. An operational permit is required for the operation and maintenance of a tire-rebuilding plant.

[A] 105.6.((~~45~~))51 Waste handling. An operational permit is required for the operation of wrecking yards, junk yards and waste material-handling facilities.

[A] 105.6.((~~46~~))52 Wood products. An operational permit is required to store chips, hogged material, lumber or plywood in excess of 200 cubic feet (6 m^3).

105.7 Required construction permits. The *fire code official* is authorized to issue construction permits for work as set forth in Sections 105.7.1 through 105.7.((~~16~~))15.

105.7 Point of Information

Building permits for construction are issued by the Department of Planning and Development (DPD). The fire code does not require separate Fire Department issued construction permits for the following:

• Automatic fire-extinguishing systems.

• Battery systems.

• Emergency responder radio coverage systems.

• Fire alarm and detection systems and related equipment.

• Fire pump and related equipment

• Standpipe systems.

Fire Department Construction and Operational Permits

If a construction permit is required and an operational permit is also required, the approved construction permit is renewable annually as an operational permit.

[A] 105.7.1 Automatic fire-extinguishing systems. A construction permit issued by the Department of Planning and Development is required for installation of or modification to an automatic fire-extinguishing system. Maintenance performed in accordance with this code is not considered a modification and does not require a permit.

[A] 105.7.2 Battery systems. A permit issued by the Department of Planning and Development is required to install stationary storage battery systems having a liquid capacity of more than 50 gallons (189 L).

* * *

[A] 105.7.5 Emergency responder radio coverage system. A construction permit issued by the Department of Planning and Development is required for installation of or modification to emergency responder radio coverage systems and related equipment. Maintenance performed in accordance with this code is not considered a modification and does not require a permit.

[A] 105.7.6 Fire alarm and detection systems and related equipment. A construction permit issued by the Department of Planning and Development is required for installation of or modification to fire alarm and detection systems and related equipment. Maintenance performed in accordance with this code is not considered a modification and does not require a permit.

[A] 105.7.7 Fire pumps and related equipment. A construction permit issued by the Department of Planning and Development is required for installation of or modification to fire pumps and related fuel tanks, jockey pumps, controllers and generators. Maintenance

performed in accordance with this code is not considered a modification and does not require a permit.

* * *

[W] ((~~**[A] 105.7.13 Solar photovoltaic power systems.** A construction permit is required to install or modify solar photovoltaic power systems.~~))

[A] 105.7.((~~**14**~~))**13 Spraying or dipping.** A construction permit is required to install or modify a spray room, dip tank or booth.

[A] 105.7.((~~**15**~~))**14 Standpipe systems.** A construction permit issued by the Department of Planning and Development is required for the installation, modification or removal from service of a standpipe system. Maintenance performed in accordance with this code is not considered a modification and does not require a permit.

[A] 105.7.((~~**16**~~))**15 Temporary membrane structures and tents.** A construction permit is required to erect a ((~~n air-supported~~)) temporary membrane structure or a tent having an area in excess of 400 square feet (37 m^2) if all of the following conditions are met:

1. The membrane structure or tent will be erected for a time period not to exceed four weeks,
2. The membrane structure or tent will be located at least 200 feet from shorelines,
3. No stage, platform, bleacher or similar structure greater than 4 feet in height will be installed inside the membrane structure or tent,
4. The membrane structure or tent will not be attached to a building or other permanent structure for support, and

5. The installation permit does not propose foul weather use, or a structure of unusual shape, unusual location or large area or height.

Exceptions:

1. Tents used exclusively for recreational camping purposes.
2. Funeral tents and curtains or extensions attached thereto, when used for funeral services.
3. Tents and awnings open on all sides which comply with all of the following:
   - 3.1. Individual tents shall have a maximum size of 700 square feet (65 m^2).
   - 3.2. The aggregate area of multiple tents placed side by side without a fire break clearance of not less than 12 feet (3658 mm) shall not exceed 700 square feet (65 m^2) total.
   - 3.3. A minimum clearance of 12 feet (3658 mm) to structures and other tents shall be maintained.

105.7.15 Point of Information

If any one of the above-noted conditions (items 1-5) is not met, a permit for the membrane structure or tent may be required from the Department of Planning and Development.

SECTION 106

INSPECTIONS

* * *

106.5 Special inspections. The *fire code official* is authorized to appoint qualified persons or agencies having special technical skills as special inspectors or plan reviewers and accept their inspection, plan review and evaluation of specialized fire protection equipment or systems.

106.5.1 Other inspections. The *fire code official* is authorized to accept inspections performed by other jurisdictions and agencies and honor permits and certificates issued by other jurisdictions for activities regulated by this code, upon presentation to the *fire code official* of satisfactory evidence that such inspections, permits and certificates are substantially in accord with the fire safety requirements of this code.

SECTION 107

MAINTENANCE

* * *

[A] 107.4 Rendering equipment inoperable. Portable or fixed fire-extinguishing systems or devices and fire-warning systems shall not be rendered inoperative or inaccessible except as necessary during emergencies, maintenance, repairs, *alterations*, drills or prescribed testing.

Exception: When approved by the *fire code official*.

* * *

[A] 107.5 Overcrowding. Overcrowding or admittance of any *person* beyond the *approved* capacity of a building or a portion thereof shall not be allowed. The *fire code official*, upon finding any overcrowding conditions or obstructions in *aisles*, passageways or other *means of egress*, or upon finding any condition which constitutes a life safety hazard, shall be authorized

to direct actions be taken to reduce the overcrowding or to cause the event to be stopped until such condition or obstruction is corrected.

SECTION 108
((~~BOARD OF~~))APPEALS

108 Point of Information

For information on appeals procedures, see Seattle Fire Department Information Bulletin *Requesting a Review by the Seattle Fire Code Appeals Board* at http://www.seattle.gov/fire/FMO/firecode/cam/5972CAM%20FireCodeAppeals.pdf

[A] 108.1 Appeals. Appeals from decisions or actions pertaining to the application and interpretation of this Code shall first be addressed to the *fire code official*. If not resolved with the *fire code official*, the appellant may submit a written request to the *fire code official* for a review by the Fire Code Appeals Board in accordance with all applicable by-laws, rules, regulations and ordinances. The result of this review is advisory only, in accordance with City of Seattle Ordinance 119799. Following receipt of the Fire Code Appeals Board recommendation the fire chief, who shall not have acted as the *fire code official* in the first appeal of the application or interpretation of the code, shall issue a final written decision. ((~~**Board of appeals established.** In order to hear and decide appeals of orders, decisions or determinations made by the *fire code official* relative to the application and interpretation of this code, there shall be and is hereby created a board of appeals. The board of appeals shall be appointed by the governing body and shall hold office at its pleasure. The *fire code official* shall be an ex officio member of~~

~~said board but shall have no vote on any matter before the board. The board shall adopt rules of procedure for conducting its business, and shall render all decisions and findings in writing to the appellant with a duplicate copy to the *fire code official*.~~))

((~~**[A] 108.2 Limitations on authority.** An application for appeal shall be based on a claim that the intent of this code or the rules legally adopted hereunder have been incorrectly interpreted, the provisions of this code do not fully apply, or an equivalent method of protection or safety is proposed. The board shall have no authority to waive requirements of this code.~~))

((~~**[A] 108.3 Qualifications.** The board of appeals shall consist of members who are qualified by experience and training to pass on matters pertaining to hazards of fire, explosions, hazardous conditions or *fire protection systems* and are not employees of the jurisdiction.~~))

SECTION 109

VIOLATIONS

[A] 109.1 Unlawful acts. It shall be unlawful for a *person*, firm or Corporation to erect, construct, alter, repair, remove, demolish or utilize a building, occupancy, premises or system regulated by this code, or cause same to be done, in conflict with or in violation of any of the provisions of this code. <u>It is a violation of the *Seattle Fire Code* for any person to fail to comply with the *Seattle Fire Code* or with any order issued by the *fire code official*.</u>

[A] 109.2 Owner/occupant responsibility. Correction and abatement of violations of this code shall be the responsibility of the *owner*. If an occupant creates, or allows to be created, hazardous conditions in violation of this code, the occupant shall be held responsible for the abatement of such hazardous conditions.

[A] 109.3 Notice of violation. When the *fire code official* finds a building, premises, vehicle, *vessel*, storage facility or outdoor area that is in violation of this code, the *fire code official* is authorized to ((~~prepare~~)) issue a written notice of violation describing the ((~~conditions deemed unsafe~~)) violation and, when compliance is not immediate, specifying a time for reinspection. Nothing in this subsection shall be deemed to limit or preclude any other enforcement action or proceeding, and nothing in this section shall be deemed to obligate or require the *fire code official* to issue a notice of violation prior to the imposition of civil or criminal penalties.

[A] 109.3.1 Service. A notice of violation issued pursuant to this code shall be served upon the *owner*, operator, occupant or other person responsible for the condition or violation, either by personal service, mail or by delivering the same to, and leaving it with, some person of responsibility upon the premises. For unattended or abandoned locations, a copy of such notice of violation shall be posted on the premises in a conspicuous place at or near the entrance to such premises and the notice of violation ((~~shall~~)) may be mailed by certified mail with return receipt requested or a certificate of mailing, to the last known address of the *owner*, occupant or both.

[A] 109.3.2 Compliance with orders and notices. A notice of violation issued or served as provided by this code shall be complied with by the *owner*, operator, occupant or other person responsible for the condition or violation to which the notice of violation pertains.

[A] 109.3.3 Prosecution of violations. If the notice of violation is not complied with promptly or by the time specified in the notice, the *fire code official* is authorized to request the legal counsel of the jurisdiction to institute the appropriate legal proceedings at law or in

equity to restrain, correct or abate such violation,((~~or~~)) to require removal or termination of the unlawful occupancy of the structure in violation of the provisions of this code or of the order or notice ((~~direction made pursuant hereto~~)), or to collect a penalty for violation.

[A] 109.3.4 Unauthorized tampering. Signs, tags or seals posted or affixed by the *fire code official* shall not be mutilated, destroyed or tampered with or removed without authorization from the *fire code official*.

[A] 109.4 ((~~**Violation**~~ **p**)) **Penalties.** Penalties shall be in accordance with this section.

109.4.1 Alternative civil penalties. ((~~*Persons*~~)) Any person who shall violate a provision of this code or shall fail to comply with any of the requirements thereof or who shall erect, install, alter, repair or do work in violation of the *approved construction documents* or directive of the *fire code official*, or of a permit or certificate used under provisions of this code, shall be ((~~guilty of a [SPECIFY OFFENSE], punishable by a fine of not more than [AMOUNT] dollars or by imprisonment to exceeding [NUMBER OF DAYS], or both such fine and imprisonment. Each day that a violation continues after due notice has been served shall be deemed a separate offense.~~)) subject to a cumulative civil penalty in an amount not to exceed $1,000 per day for each violation from the time the violation occurs or begins until compliance is achieved. The penalty shall be collected by civil action brought in the name of the City. The *fire code official* shall notify the City Attorney in writing of the name of any person, firm or corporation subject to the penalty, and the City Attorney shall, with the assistance of the *fire code official*, take appropriate action to collect the penalty. In any civil

action for a penalty, the city has the burden of proving by a preponderance of the evidence that a violation exists or existed.

109.4.2 Alternative criminal penalty. Any person who shall violate a provision of this code or shall fail to comply with any of the requirements thereof or who shall erect, install, alter, repair or do work in violation of the *approved construction documents* or directive of the *fire code official*, or of a permit or certificate used under provisions of this code, shall be guilty of a gross misdemeanor subject to the provisions of *Seattle Municipal Code* Chapters 12A.02 and 12A.04, except that absolute liability shall be imposed for such a violation or failure to comply and none of the mental states described in Section 12A.04.030 need be proved. The *fire code official* may request the City Attorney prosecute such violations criminally as an alternative to the civil penalties provision. Each day that a violation continues shall be deemed a separate offense.

[A]109.((~~**4.1**~~))**4.3 Abatement of violation.** In addition to the imposition of ((~~the~~)) civil and criminal penalties ((~~herein described~~)), the *fire code official* is authorized to institute appropriate action to prevent unlawful construction; ((~~or~~)) to restrain, correct or abate a violation; ((~~or~~)) to prevent illegal occupancy of a structure or premises; or to stop an illegal act, conduct of business or occupancy of a structure on or about any premises.

SECTION 110

UNSAFE BUILDINGS, PREMISES, VEHICLES AND VESSELS

[A] 110.1 General. If ((~~during the inspection of~~)) a premises, a building or structure or any building system, vehicle or *vessel*, in whole or in part, ((~~constitutes a clear and inimical threat to~~

~~human life, safety or health,~~)) endangers any property or the health or safety of the occupants of the property or of neighboring premises, buildings, vehicles, *vessels*, or the health and safety of the public or fire department personnel the *fire code official* shall issue such notice or orders to remove or remedy the conditions as shall be deemed necessary in accordance with this section. ((~~and shall~~)) The *fire code* official may refer the building to the ((~~building department~~)) Department of Planning and Development for any repairs, *alterations*, remodeling, removing or demolition required.

[A] 110.1.1 Unsafe conditions. Structures, premises or existing equipment that are or hereafter become unsafe or deficient because of inadequate *means of egress*, ((~~or which~~)) that constitute a fire hazard, ((~~or are otherwise dangerous to human life or the public welfare, or which~~)) that involve illegal or improper occupancy or inadequate maintenance, or that are otherwise dangerous to human life or public welfare, shall be deemed an unsafe condition. A vacant structure which is not secured against unauthorized entry as required by Section 311 shall be deemed unsafe.

[A] 110.1.2 Structural hazards. When an apparent structural hazard is caused by the faulty installation, operation or malfunction of any of the items or devices governed by this code, the *fire code official* ((~~shall~~)) is authorized to immediately notify the building code official in accordance with Section 110.1.

[A] 110.2 Evacuation. The *fire code official* or the fire department official in charge of an incident shall be authorized to order the immediate evacuation of any occupied premises, building, vehicle, or *vessel* deemed unsafe when such premises, building, vehicle, or *vessel* has

hazardous conditions that present imminent danger to premises, building, vehicle, or *vessel* occupants. *Persons* so notified shall immediately leave the structure or premises, vehicle, or *vessel* and shall not enter or re-enter until authorized to do so by the *fire code official* or the fire department official in charge of the incident.

[A] 110.3 Summary abatement. Where conditions exist that are deemed hazardous to life and property, the *fire code official* or fire department official in charge of the incident is authorized to abate summarily such hazardous conditions that are in violation of this code.

[A] 110.4 Abatement. The *owner*, operator or occupant of a building or premises deemed unsafe by the *fire code official* shall abate or cause to be abated or corrected such unsafe conditions either by repair, rehabilitation, demolition or other *approved* corrective action.

110.5 Notification. The *fire code official* shall serve the responsible party with a copy of violations, correction letters and orders issued.

SECTION 111

STOP WORK OR USE ORDER

[A] 111.1 Order. Whenever the *fire code official* finds any work or use regulated by this code being performed in a manner contrary to the provisions of this code or in a dangerous or unsafe manner, the *fire code official* is authorized to issue a stop work or use order.

[A] 111.2 Issuance. A stop work or use order shall be in writing and shall be given to the *owner* of the property, or to the *owner's* agent, or to the *person* doing the work or use. Upon issuance of a stop work or use order, the cited work or use shall immediately cease. The stop work or use

order shall state the reason for the order, and the conditions under which the cited work or use is authorized to resume.

[A] 111.3 Emergencies. Where an emergency exists, the *fire code official* shall not be required to give a written notice prior to stopping the work or use.

[A] 111.4 Failure to comply. It is a violation of this code for ((~~A~~))any *person*((~~who shall~~)) to continue any work or use after having been served with a stop work or use order, except such work or use as that *person* is directed to perform to remove a violation or unsafe condition.((~~, shall be liable to a fine of not less than [AMOUNT] dollars or more than [AMOUNT] dollars.~~))

* * *

SECTION 113

FEES

[A] 113.1 Fees. A permit shall not be issued until the fees have been paid, nor shall an amendment to a permit be released until the additional fee, if any, has been paid.

Exception: Those permits for which the *fire code official*, pursuant to the fee ordinance, authorizes invoices to be sent for the fees after the permits are issued.

[A] 113.2 Schedule of permit fees. A fee for each permit shall be paid as required, in accordance with the schedule ((~~as~~)) established by the ((~~applicable~~)) governing authority.

((**[A]** ~~**113.3 Work commencing before permit issuance.** Any *person* who commences any work, activity or operation regulated by this code before obtaining the necessary permits shall be subject to an additional fee established by the applicable governing authority, which shall be in addition to the required permit fees.~~))

[A] 113.((**4**))**3 Related fees.** The payment of the fee for the construction, *alteration*, removal or demolition of work done in connection ((~~to~~)) or concurrently with the work or activity authorized by a permit ((~~shall~~)) does not relieve the applicant or holder of the permit from the payment of other fees that are prescribed by law.

113.((~~5~~))**4 Refunds.** The applicable governing authority is authorized to establish a refund policy.

***

Section 4. Chapter 2 of the 2012 International Fire Code is amended as follows:

CHAPTER 2

DEFINITIONS

***

SECTION 202

GENERAL DEFINITIONS

***

[W] ADULT FAMILY HOME. A dwelling in which a person or persons provide personal care, special care, room and board to more than one but not more than six adults who are not related by blood or marriage to the person or persons providing the services.

***

[W] ALERT SIGNAL. A distinctive signal indicating the need for trained personnel and occupants to initiate a specific action, such as shelter-in-place.

[W] ALERT SYSTEM. Approved devices, equipment and systems or combinations of systems used to transmit or broadcast an alert signal.

***

[B] AWNING. ((~~An architectural projection that provides weather protection, identity or decoration and is partially or wholly supported by the building to which it is attached. An awning is comprised of a lightweight frame structure over which a covering is attached.~~)) A protective covering with a nonrigid surface projecting from a building.

***

BERTH. The water space to be occupied by a boat or other vessel alongside or between bulkheads, piers, piles, fixed and floating docks, or any similar access structure.

***

BOAT. Any device in which a person may be transported upon water and includes every motorboat, sailboat, pontoon boat, rowboat, skiff, dinghy, or canoe, regardless of size.

BOATHOUSE An independently floating structure designed to be moored to a main float system to enclose and protect a vessel or vessels. A boathouse is capable of being moved on water, but is typically moored to a float system for long periods of time.

***

BONFIRE. An outdoor fire utilized for ceremonial or recreational purposes and exceeding the size of a recreational fire.

***

[A] BUILDING OFFICIAL. The ((~~officer or other designated authority charged with the administration and enforcement of this code~~)) Director of the Department of Planning and Development, or a duly authorized representative.

***

CANOPY. ((~~A structure or architectural projection of rigid construction over which a covering is attached that provides weather protection, identity or decoration, and may be structurally independent or supported by attachment to a building on one end and by not less than one stanchion on the outer end.~~)) A protective covering with a rigid surface projecting from a building. Marquees are a type of canopy.

***

[W] CHILD DAY CARE. The care of children during any period of a 24-hour day.

[W] CHILD DAY CARE HOME, FAMILY. A child day care facility, licensed by the state, located in the dwelling of the person or persons under whose direct care and supervision the child is placed, for the care of 12 or fewer children, including children who reside at the home.

***

CONTAINER FREIGHT STATION. A transload facility used primarily for loading and unloading cargo from containers.

***

COVERED BOAT MOORAGE. A pier or system of floating or fixed accessways to which vessels on water may be secured and any portion of which are covered by a roof.

***

DESIGNATED HOT WORK FACILITY. Those piers, designated by the fire code official, and by virtue of their construction, location, fire protection, emergency vehicle access and fire hydrant availability, that are suitable to permit certain repairs to vessels.

***

[W] EMERGENCY ((~~EVACUATION~~)) DRILL. An exercise performed to train staff and occupants and to evaluate their efficiency and effectiveness in carrying out emergency ((~~evacuation~~)) procedures.

***

EMERGENCY POWER SYSTEM. An electrical system that complies with *Seattle Electrical Code* Article 700.

***

[B] EXIT PASSAGEWAY. An exit component that ((~~is separated from other interior spaces of a building or structure by fire-resistance-rated construction and opening protectives, and~~)) provides for a protected path of egress travel in a horizontal direction to an *exit* or the *exit discharge.*

***

FIRE DEPARTMENT MASTER KEY. A limited issue key of special or controlled design to be carried by fire department officials in command which will open key boxes on specified properties.

202 Point of Information

The *fire code official* has approved the "KnoxBox" as the access key box for use in the City of Seattle.

***

FIRE DETECTION SYSTEM. A system of smoke or heat detectors monitored at an approved central station, with no requirement for notification appliances in the building.

***

FIRE DISTRICT. That part of the city within the boundary described as follows:

Beginning at the intersection of the center line of Alaskan Way and Clay Street; thence northeasterly along the center line of Clay Street to an intersection with the center line of Denny Way; thence easterly along the center line of Denny Way to an intersection with the center line of Yale Avenue; thence southeasterly along the center line of Yale Avenue to an intersection with the center line of Interstate Highway 5; thence southerly and southeasterly along the center line of Interstate 5 to an intersection with the center line of 7th Avenue South; thence southerly along the center line of 7th Avenue South to an intersection with the center line of Dearborn Street; thence westerly along the center line of Dearborn Street to an intersection with the center line of Airport Way; thence northwesterly along the center line of Airport Way to an intersection with the center line of 4th Avenue South; thence southerly along the center line of 4th Avenue south to an intersection with the center line of South Royal Brougham Way; thence westerly along said center line of South Royal Brougham Way to an intersection with the center line of South Alaskan Way; thence southerly along the center line of South Alaskan Way to an

intersection with the center line of South Massachusetts Street; thence westerly along the centerline of South Massachusetts Street to the Outer Harbor Line in Elliott Bay; thence northerly and northwesterly along said Outer Harbor Line to an intersection with the center line of West Harrison Street; thence easterly along the center line of West Harrison Street to an intersection with the center line of Alaskan Way; then southeasterly along the center line of Alaskan Way to the point of beginning.

Buildings and structures located partially within and partially outside the Fire District are considered to be located in the Fire District.

Point of Information

For a map of the City of Seattle *Fire District*, see the *Seattle Building Code*.

***

[B] FIRE SEPARATION DISTANCE. The distance measured from the building face to one of the following:

1. The closest interior lot line;
2. To the ((~~centerline~~)) opposite side of a street, an alley or public way; or
3. To an imaginary line between two buildings on the property.

The distance shall be measured at right angles from the face of the wall.

***

[B] FIRE WALL. A fire-resistance-rated wall having protected openings, which restricts the spread of fire and extends continuously from the foundation to or through the roof. ((, ~~with~~

~~sufficient structural stability under fire conditions to allow collapse of construction on either side without collapse of the wall~~)).

***

GRADE PLANE. A reference plane representing the average of finished ground level adjoining the building at *exterior walls*. Where the finished ground level slopes away from the *exterior walls*, the reference plane shall be established by the lowest points within the area between the building and the *lot line* or, where the *lot line* is more than 6 feet (1829 mm) from the building, between the building and a point 6 feet (1829 mm) from the building. For grade of structures built over water, see Seattle Building Code Section 425.2.

***

[W] GRAVITY-OPERATED DROP OUT VENTS. Automatic smoke and heat vents containing heat-sensitive glazing designed to shrink and drop out of vent openings when exposed to fire.

***

HEIGHT, BUILDING. The vertical distance from *grade plane* to the average height of the highest roof surface other than rooftop structures complying with Seattle Building Code Section 1509.

***

[W] HOSPICE CARE CENTERS. A building or portion thereof used on a 24-hour basis for the provision of hospice services to terminally ill inpatients.

***

MARINA. ((~~Any portion of the ocean or inland water, either naturally or artificially protected, for the mooring, servicing or safety of vessels and shall include artificially protected works, the public or private lands ashore, and structures or facilities provided within the enclosed body of water and ashore for the mooring or servicing of vessels or the servicing of their crews or passengers.~~)) A facility, generally on the waterfront, that stores and services boats in berths, on moorings, and in dry storage or dry stack storage.

***

MARINE TERMINAL. A facility comprised of one or more berths, piers, wharves, loading and unloading areas, warehouses, and storage yards and used for transfer of people and/or cargo between waterborne and land transportation modes.

***

[W] NIGHTCLUB. An A-2 Occupancy use under the 2006 International Building Code in which the aggregate area of concentrated use of unfixed chairs and standing space that is specifically designated and primarily used for dancing or viewing performers exceeds three hundred fifty square feet, excluding adjacent lobby areas. "Nightclub" does not include theaters with fixed seating, banquet halls, or lodge halls.

***

NON-PRODUCTION LABORATORY FACILITY. A facility where the containers used for reactions, transfers, and other handling of chemicals are designed to be easily and safely manipulated by one person. It is a workplace where chemicals are used or synthesized on a nonproduction basis.

***

OCCUPANCY CLASSIFICATION. For the purposes of this code, certain occupancies are defined as follows:

***

[W] GROUP E, DAY CARE FACILITIES. This group includes buildings and structures or portions thereof occupied by more than five children older than 2 ½ years of age who receive educational, supervision or personal care services for less than 24 hours per day.

Within places of worship. Rooms and spaces within places of worship providing such care during religious functions shall be classified as part of the primary occupancy.

Five or fewer children. A facility having five or fewer children receiving such care shall be classified as part of the primary occupancy.

Family child day care homes. Family child day care homes licensed by Washington State for the care of twelve or fewer children shall be classified as Group R-3.

((~~**Five or fewer children in a dwelling unit.** A facility such as the above within a *dwelling unit* and having five or fewer children receiving such care shall be classified as a Group R-3 occupancy or shall comply with the *International Residential Code*.~~))

***

[W] INSTITUTIONAL GROUP I-1. This occupancy shall include buildings, structures or parts thereof for more than 16 persons ((~~who reside on a 24-hour basis, in a supervised environment and receive custodial care. The persons receiving care are capable of self preservation.~~)) , on a 24-hour basis, who because of age, mental disability or other reasons,

live in a supervised residential environment that provides *personal care services*. The occupants are capable of responding to an emergency situation without physical assistance from staff. This group shall include, but not be limited to, the following:

Alcohol and drug centers

Assisted living facilities

Congregate care facilities

Convalescent facilities

Group homes

Half-way houses

Residential board and care facilities

Social rehabilitation facilities

State licensed care facilities. A facility such as the above providing licensed care to clients in one of the categories listed in the Seattle Building Code Section 310.1 licensed by Washington State shall be classified as Group R-2.

Five or fewer persons receiving care. A facility such as the above with five or fewer persons receiving such care and adult family homes licensed by Washington state shall be classified as Group R-3 or shall comply with the *International Residential Code*.((~~provided an *automatic sprinkler system* is installed in accordance with Section 903.3.1.3 or *International Residential Code* Section P2904.~~))

((~~**Six to sixteen persons receiving care.** A facility such as above, housing at least six and not more than 16 persons receiving such care, shall be classified as Group R-4.~~))

[W][B] INSTITUTIONAL GROUP I-2. This occupancy shall include buildings and tructures used for medical, surgical, psychiatric, nursing or custodial care for ((~~care on a 24-hour basis for more than five~~)) persons who are not capable of self-preservation. This group shall include, but not be limited to, the following:

((~~Foster~~)) Child care facilities

Detoxification facilities

Hospice care centers

Hospitals

Mental hospitals

Nursing homes

((~~Psychiatric hospitals~~))

State licensed care facilities. A facility providing licensed care to clients in one of the categories listed in *Seattle Building Code* Section 310.1 licensed by Washington State shall be classified as Group R-2.

((~~**Five or fewer persons receiving care.** A facility such as the above with five or fewer persons receiving such care shall be classified as Group R-3 or shall comply with the *International Residential Code* provided an *automatic sprinkler system* is installed in accordance with Section 903.3.1.3 or Section P2904 of the *International Residential Code*.~~))

***

[W] INSTITUTIONAL GROUP I-4, DAY CARE FACILITIES. This group shall include buildings and structures occupied by ((~~more than five~~)) persons of any age who receive custodial care for less than 24 hours by ((~~persons~~)) individuals other than parents or guardians, relatives by blood, marriage, or adoption, and in a place other than the home of the person cared for. ((~~This group shall include, but not be limited to, the following:~~

~~Adult day care~~

~~Child day care~~))

Adult care facility. A facility that provides accommodations for less than 24 hours for more than five unrelated adults and provides supervision and *personal care services* shall be classified as Group I-4.

Exception: Where the occupants are capable of responding to an emergency situation without physical assistance from the staff, the facility shall be classified as Group R-3.

((~~Classification as Group E.~~ ~~A child day care facility that provides care for more than five but no more than 100 children 2 ½ years or less of age, where the rooms in which the children are cared for are located on a *level of exit discharge* serving such rooms and each of these child care rooms has an *exit* door directly to the exterior, shall be classified as Group E.~~))

Within a place of religious worship. Rooms and spaces within places of religious worship providing such care during religious functions shall be classified as part of the primary occupancy.

[W] ((~~**Five or fewer occupants receiving care.** A facility having five or fewer persons receiving custodial care shall be classified as part of the primary occupancy.~~))

[W] Child care facility. Child care facilities that provide supervision and personal care on a less than 24-hour basis for more than five children 2 1/2 years of age or less shall be classified as Group I-4.

Exceptions:

1. A child day care facility that provides care for more than five but no more than 100 children 2 1/2 years or less of age, where the rooms in which the children are cared for are located on a *level of exit discharge* serving such rooms and each of these child care rooms has an *exit* door directly to the exterior, shall be classified as Group E.
2. Family child day care homes licensed by Washington state for the care of 12 or fewer children shall be classified as Group R-3.

Five or fewer occupants receiving care in a *dwelling unit*. A facility such as the above within a *dwelling unit* and having five or fewer persons receiving custodial care shall be classified as a Group R-3 occupancy or shall comply with the *International Residential Code* in accordance with Section 101.2 of the *International Building Code*.

***

RESIDENTIAL GROUP R. Residential Group R includes, among others, the use of a building or structure, or a portion thereof, for sleeping purposes when not classified as an Institutional Group I or when not regulated by the *International Residential Code* in

accordance with Section 101.2 of the *International Building Code*. Residential occupancies shall include the following:

[W] RESIDENTIAL GROUP R-1. Residential occupancies containing sleeping units where the occupants are primarily transient in nature, including:

Boarding houses (transient) ((~~with more than 10 occupants~~))

Congregate living facilities (transient) with more than 10 occupants

Hotels (transient)

Motels (transient)

Congregate living facilities (transient) with 10 or fewer occupants are permitted to comply with the construction requirements for Group R-3.

[W] RESIDENTIAL GROUP R-2. Residential occupancies containing *sleeping units* or more than two *dwelling units* where the occupants are primarily permanent in nature, including:

Apartment houses

Boarding homes licensed by Washington state under Chapter 388-78A WAC

Boarding houses (nontransient) ((~~with more than 16 occupants~~))

Congregate living facilities (nontransient) with more than 16 occupants

Convents

Dormitories

Fraternities and sororities

Hotels (nontransient)

Live/work units

Monasteries

Motels (nontransient)

Residential treatment facilities as licensed by Washington state under Chapter 246-337 WAC

Vacation timeshare properties

[W] RESIDENTIAL GROUP R-3 Residential occupancies where the occupants are primarily permanent in nature and not classified as Group R-1, R-2, ((~~R-4~~)) or I, including:

Adult care facilities that provide accommodations for five or fewer persons of any age for less than 24 hours.

((~~Boarding houses (nontransient) with 16 or fewer occupants~~

~~Boarding houses (transient) with 10 or fewer occupants~~

~~Buildings that do not contain more than two dwelling units~~))

((~~Care~~)) Child care facilities that provide accommodations for five or fewer persons of any age for less than 24 hours

Congregate living facilities (nontransient) with 16 or fewer occupants

Congregate living facilities (transient) with ((~~10~~)) 16 or fewer occupants.

[W] Adult family homes, family child day care homes. Adult care within a single-family home, adult family homes and family child day care homes are permitted to comply with the *International Residential Code*.

[W] Foster family care homes. Foster family care homes licensed by Washington State are permitted to comply with the *International Residential Code*, as an accessory use to a dwelling, for six or fewer children including those of the resident family.

((~~**Care facilities within a dwelling.** Care facilities for five or fewer persons receiving care that are within a single-family dwelling are permitted to comply with the *International Residential Code* provided an *automatic sprinkler system* is installed in accordance with Section 903.3.1.3 or Section P2904 of the *International Residential Code*.~~))

[W] ((~~**RESIDENTIAL GROUP R-4** Residential occupancies shall include buildings arranged for occupancy as residential care/assisted living facilities including more than five but not more than 16 occupants, excluding staff. Group R-4 occupancies shall meet the requirements for construction as defined for Group R-3, except as otherwise provided for in this code or shall comply with the *International Residential Code*, provided the building is protected by an *automatic sprinkler system* installed in accordance with Section 903.2.8.~~

~~Alcohol and drug centers~~

~~Assisted living facilities~~

~~Congregate care facilities~~

~~Convalescent facilities~~

~~*Group homes*~~

~~Halfway houses~~

~~Residential board and *custodial care* facilities~~

~~Social rehabilitation facilities~~

~~Group R-4 occupancies shall meet the requirements for construction as defined for Group R-3, except as otherwise provided for in this code.~~))

[B] Storage Group S. Storage Group S occupancy includes, among others, the use of a building or structure, or a portion thereof, for storage that is not classified as a hazardous occupancy.

Moderate-hazard storage, Group S-1. Buildings occupied for storage uses that are not classified as Group S-2, including, but not limited to, storage of the following:

Aerosols, Levels 2 and 3

Aircraft hangar (storage and repair)

Bags: cloth, burlap and paper

Bamboos and rattan

Baskets

Belting: canvas and leather

Books and paper in rolls or packs

Boots and shoes

Buttons, including cloth covered, pearl or bone

Cardboard and cardboard boxes

Clothing, woolen wearing apparel

Cordage

Dry boat storage (indoor)

Furniture

Furs

Glues, mucilage, pastes and size

Grains

Horns and combs, other than celluloid

Leather

Linoleum

Lumber

Motor vehicle and marine repair garages complying with the maximum allowable quantities of hazardous materials *listed* in Table 2703.1.1(1) (see Section 406.6 of the *International Building Code*)

Photo engravings

Resilient flooring

Silks

Soaps

Sugar

Tires, bulk storage of

Tobacco, cigars, cigarettes and snuff

Upholstery and mattresses

Wax candles

Low-hazard storage, Group S-2. Includes, among others, buildings used for the storage of noncombustible materials such as products on wood pallets or in paper cartons with or without single thickness divisions; or in paper wrappings. Such products are permitted to have a negligible amount of plastic trim, such as knobs, handles or film wrapping. Storage uses shall include, but not be limited to, storage of the following:

Asbestos

Beverages up to and including 16-percent alcohol in metal, glass or ceramic containers

Cement in bags

Chalk and crayons

<u>Covered boat moorage not classified as Group U</u>

Dairy products in nonwaxed coated paper containers

Dry cell batteries

Electrical coils

Electrical motors

Empty cans

Food products

Foods in noncombustible containers

Fresh fruits and vegetables in nonplastic trays or containers

Frozen foods

Glass

Glass bottles, empty or filled with noncombustible liquids

Gypsum board

Inert pigments

Ivory

Meats

Metal cabinets

Metal desks with plastic tops and trim

Metal parts

Metals

Mirrors

Oil-filled and other types of distribution transformers

Parking garages, open or enclosed

Porcelain and pottery

Stoves

Talc and soapstones

Washers and dryers

***

OUTDOOR ASSEMBLY EVENT. Private or public event conducted outdoors, including but not limited to beer gardens and mazes, having a projected attendance of 500 or more or confines 100 or more attendees by permanent or temporary installation of barricades or fencing.

Exception: Events held at Group R, Division 3 occupancies.

***

PIER. ((~~A structure built over the water, supported by pillars or piles, and used as a landing place, pleasure pavilion or similar purpose.~~)) A structure, usually of greater length than width, of timber, stone, concrete or other material, having a deck and projecting from the shore into waters so that boats may be moored alongside for loading, unloading, storage, repairs or commercial uses.

***

[W] PORTABLE SCHOOL CLASSROOM. A structure, transportable in one or more sections, which requires a chassis to be transported, and is designed to be used as an educational space with or without a permanent foundation. The structure shall be trailerable and capable of being demounted and relocated to other locations as needs arise.

***

[W] RECALL SIGNAL. An electrically or mechanically operated signal used to recall occupants after an emergency drill or to terminate a shelter-in-place event that shall be distinct from any alarm or alert signal used to initiate an emergency plan, or other signals.

***

REPAIR GARAGE. ((~~A building, structure or portion thereof used for servicing or repairing motor vehicles.~~))

Major Repair Garage. A building or portions of a building where major repairs, such as engine overhauls, painting, body and fender work, and repairs that require draining of the motor vehicle fuel tank are performed on motor vehicles, including associated floor space used for offices, parking, or showrooms.

Minor Repair Garage. A building or portions of a building used for lubrication, inspection, and minor automotive maintenance work, such as engine tune-ups, replacement of parts, fluid changes (e.g., oil, antifreeze, transmission fluid, brake fluid, air conditioning refrigerants, etc.), brake system repairs, tire rotation, and similar routine maintenance work, including associated floor space used for offices, parking, or showrooms.

***

[W] SHELTER-IN-PLACE. An emergency response used to minimize exposure of facility occupants to chemical or environmental hazards by taking refuge in pre-determined interior rooms or areas where actions are taken to isolate the interior environment from the exterior hazard.

***

SHIPYARD. A pier, wharf or series of piers and wharves and related onshore facilities, designated by the *fire code official*, that by virtue of the pier construction, location, emergency vehicle access, fire protection, hydrant availability and onsite safety personnel in accordance with Seattle Fire Department Administrative Rule 26.02.09, *Designated Hot Work Facilities and Shipyards* and any future revisions of this rule adopted by the *fire code official*, is suitable to permit repairs, including major conversions, on marine vessels of any length.

***

SLIP. A berthing place between or adjacent to piers, wharves, or docks: the water areas associated with boat moorage.

***

[B] STANDBY POWER SYSTEM, LEGALLY REQUIRED. An electrical power system that complies with *Seattle Electrical Code* Article 701, Legally Required Standby Systems.

***

STANDBY FIRE PERSONNEL. Uniformed employees of the Seattle Fire Department.

***

[B] STORY ABOVE GRADE PLANE. Any story having its finished floor surface entirely above grade plane, or in which the finished surface of the next floor ((~~next~~)) above is:

1. More than 6 feet (1829 mm) above grade plane; or
2. More than 12 feet (3658 mm) above the finished ground level ((~~at any point~~)) for more than 25 feet (7620 mm) of the perimeter. Required driveways up to 22 feet (6706 mm) wide shall not be considered in calculating the 25 foot distance if there is at least 10 feet (3048 mm) between the driveway and all portions of the 25 foot area.

***

Section 5. Chapter 3 of the 2012 International Fire Code is amended as follows:

CHAPTER 3

GENERAL REQUIREMENTS

***

SECTION 304

COMBUSTIBLE WASTE MATERIAL

304.3 Containers. Combustible rubbish, and waste material kept within or near a structure shall be stored in accordance with Sections 304.3.1 through 304.3.((**4**))3.

304.3.1 Spontaneous ignition. Materials susceptible to spontaneous ignition, such as oily rags, shall be stored in a *listed* disposal container. Contents of such containers shall be removed and disposed of daily.

304.3.2 Capacity exceeding 5.33 cubic feet. Containers with a capacity exceeding 5.33 cubic feet (40 gallons) (0.15 m3) shall be provided with lids. Containers and lids shall be constructed of noncombustible materials or of combustible materials with a peak rate of heat release not exceeding 300 kW/m2 when tested in accordance with ASTM E 1354 at an incident heat flux of 50 kW/m2 in the horizontal orientation.

Exceptions:

1. Wastebaskets in Group I-3 occupancies shall comply with Section 808.1.
2. Waste accumulated for collection by the City's solid waste utility shall be stored in containers (to include recycling containers) specified in the City's solid waste collection contracts authorized by ordinance.
3. Containers in areas protected by an *approved automatic sprinkler system* installed throughout in accordance with Section 903.3.1.1, 903.3.1.2 or 903.3.1.3.

***

SECTION 307

OPEN BURNING, RECREATIONAL FIRES AND PORTABLE OUTDOOR FIREPLACES

307.1 General. A person shall not kindle or maintain or authorize to be kindled or maintained any *open burning.* ((~~unless conducted and *approved* in accordance with this section.~~))

Exception: Bonfires allowed under a permit issued by the fire code official.

((~~**307.1.1 Prohibited open burning.** *Open burning* that is offensive or objectionable because of smoke emissions or when atmospheric conditions or local circumstances make such fires hazardous shall be prohibited.~~

~~**Exception:** Prescribed burning for the purpose of reducing the impact of wildland fire when authorized by the *fire code official*.~~))

307.2 Permit required. A permit shall be obtained from the *fire code official* in accordance with Section 105.6 prior to kindling ((~~a fire for recognized silvicultural or range or wildlife management practices, prevention or control of disease or pests, or~~)) a *bonfire*. ((~~Application for such approval shall only be presented by and permits issued to the *owner* of the land upon which the fire is to be kindled.~~))

307.2.1 Authorization. Where required by state or local law or regulations, ((~~*open burning*~~)) bonfires shall only be permitted with prior approval from the state or local air and water quality management authority, provided that all conditions specified in the authorization are followed.

307.3 Extinguishment authority. When ((~~*open burning*~~)) a bonfire, recreational fire, or portable outdoor fireplace creates or adds to a hazardous situation, or a required permit for ((~~*open burning*~~)) a bonfire has not been obtained, the *fire code official* is authorized to order the extinguishment of the ((~~open~~)) burning operation.

307.4 Location. The location for ((~~*open burning* shall not be less than 50 feet (15 240 mm) from any structure, and provisions shall be made to prevent the fire from spreading to within 50 feet~~

~~(15 240 mm) of any structure~~)) bonfires, recreational fires, and portable outdoor fireplaces shall be in accordance with sections 307.4.1 through 307.4.3

((~~**Exceptions:**~~

~~1. Fires in *approved* containers that are not less than 15 feet (4572 mm) from a structure.~~

~~2. The minimum required distance from a structure shall be 25 feet (7620 mm) where the pile size is 3 feet (914 mm) or less in diameter and 2 feet (610 mm) or less in height~~.))

***

307.5 Attendance. ((~~*Open burning*, b~~)) Bonfires, *recreational fires* and use of portable outdoor fireplaces shall be constantly attended until the fire is extinguished. A minimum of one portable fire extinguisher complying with Section 906 with a minimum 4-A rating or other *approved* on-site fire-extinguishing equipment, such as dirt, sand, water barrel, garden hose or water truck, shall be available for immediate utilization.

307.8 General burning prohibitions Trash, yard waste, rubbish and paper are prohibited as fuel for bonfires, recreational fires and fires in outdoor fireplaces.

307 Point of Information

Hazards from *bonfires*, *recreational fires*, and fires in outdoor fireplaces may include but are not limited to smoke or odor emissions causing potential for false alarms, medical alarms, hazards to health, and exposure to other structures from fire.

If conducting a bonfire or recreational fire or if using an outdoor fireplace, fire extinguishing equipment in accordance with SFC 307.5 shall be available for immediate use. For additional regulations and information pertaining to outdoor fires and burning, see RCW 70.94. Go to

www.pscleanair.org for information on how to register an air quality complaint with the Puget Sound Clean Air Agency.

See SFD Client Assistance Memo *Recreational and Cooking Fire Regulations* at www.seattle.gov/fire. For air quality and burn ban status information and regulations contact the Puget Sound Clean Air Agency referenced above.

SECTION 308

OPEN FLAMES

[W] **((~~308.1.4 Open-flame cooking devices.~~** ~~Charcoal burners and other open-flame cooking devices shall not be operated on combustible balconies or within 10 feet (3048 mm) of combustible construction.~~

~~**Exceptions:**~~

~~1. One- and two-family *dwellings*.~~

~~2. Where buildings, balconies and decks are protected by an *automatic sprinkler system*.~~

~~3. LP-gas cooking devices having LP-gas container with a water capacity not greater than 21/2 pounds [nominal 1 pound (0.454 kg) LP-gas capacity].~~))

308.1.((~~5~~))4 Location near combustibles. Open flames such as from candles, lanterns, kerosene heaters and gas-fired heaters shall not be located on or near decorative material or similar combustible materials.

308.1.((~~6~~))5 Open-flame devices. Torches and other devices, machines or processes liable to start or cause fire shall not be operated or used in or upon wildfire risk areas, except by a permit in accordance with Section 105.6 secured from the *fire code official*.

Exception: Use within inhabited premises or designated campsites which are a minimum of 30 feet (9144 mm) from grass-, grain-, brush- or forest-covered areas.

308.1.((~~6~~))5.1 Signals and markers. Flame-employing devices, such as lanterns or kerosene road flares, shall not be operated or used as a signal or marker in or upon wildfire risk areas.

Exception: The proper use of fuses at the scenes of emergencies or as required by standard railroad operating procedures.

308.1.((~~6~~))5.2 Portable fueled open-flame devices. Portable open-flame devices fueled by flammable or combustible gases or liquids shall be enclosed or installed in such a manner as to prevent the flame from contacting combustible material.

Exceptions:

1. LP-gas-fueled devices used for sweating pipe joints or removing paint in accordance with Chapter 38.
2. Cutting and welding operations in accordance with Chapter 26.
3. Torches or flame-producing devices in accordance with Section 308.1((~~4~~))3 and 308.1.5.
4. Candles and open-flame decorative devices in accordance with Section 308.1((~~3~~))4.

[W] 308.1.((~~7~~))**6 Religious ceremonies.** ((~~When, in the opinion of the *fire code official*, adequate safeguards have been taken, participants in religious ceremonies are allowed to carry hand-held candles.~~)) Participants in religious ceremonies shall not be precluded from carrying hand-held candles. Hand-held candles shall not be passed from one *person* to another while lighted.

[W] 308.1.((~~7~~))**6.1 Aisles and exits.** Candles shall be prohibited in areas where occupants stand, or in an *aisle* or *exit*.

Exception: Candles used in religious ceremonies.

308.1.((~~8~~))7 **Flaming food and beverage preparation.** The preparation of flaming foods or beverages in places of assembly and drinking or dining establishments shall be in accordance with Sections 308.1.((~~8~~))7.1 through 308.1.((~~8~~))7.5.

308.1.((~~8~~))**7.1 Dispensing.** Flammable or *combustible liquids* used in the preparation of flaming foods or beverages shall be dispensed from one of the following:

1. A 1-ounce (29.6 ml) container; or
2. A container not exceeding 1-quart (946.5 ml) capacity with a controlled pouring device that will limit the flow to a 1-ounce (29.6 ml) serving.

308.1.((~~8~~))**7.2 Containers not in use.** Containers shall be secured to prevent spillage when not in use.

308.1.((~~8~~))**7.3 Serving of flaming food.** The serving of flaming foods or beverages shall be done in a safe manner and shall not create high flames. The pouring, ladling or spooning of

liquids is restricted to a maximum height of 8 inches (203 mm) above the receiving receptacle.

308.1.((~~8~~))7.4 Location. Flaming foods or beverages shall be prepared only in the immediate vicinity of the table being serviced. They shall not be transported or carried while burning.

308.1.((~~8~~))7.5 Fire protection. The *person* preparing the flaming foods or beverages shall have a wet cloth towel immediately available for use in smothering the flames in the event of an emergency.

***

308.3 Group A occupancies. Open-flame devices shall not be used in a Group A occupancy.

Exceptions:

1. Open-flame devices are allowed to be used in the following situations, provided *approved* precautions are taken to prevent ignition of a combustible material or injury to occupants:
   1.1. Where necessary for ceremonial or religious purposes in accordance with Section 308.1.((~~7~~))6.
   1.2. On stages and platforms as a necessary part of a performance in accordance with Section 308.3.2.
   1.3. Where candles on tables are securely supported on substantial noncombustible bases and the candle flames are protected.

2. Heat-producing equipment complying with Chapter 6 and the *International Mechanical Code*.
3. Gas lights are allowed to be used provided adequate precautions satisfactory to the *fire code official* are taken to prevent ignition of combustible materials.

***

308.4 Group R occupancies. Open flame, fire and burning in Group R occupancies shall comply with the requirements of Sections 308.1 through 308.1.((~~6~~))5.2 and 308.4.1.

***

SECTION 310

SMOKING

***

310.3 "No Smoking" signs. The *fire code official* is authorized to order the posting of "No Smoking" signs in a conspicuous location in each structure or location in which smoking is prohibited. The content, lettering, size, color and location of required "No Smoking" signs shall be *approved*.

310.3 Point of Information

See *Seattle Municipal Code* 10.64 for requirements for posting "no smoking" signs in public places.

***

SECTION 311

VACANT PREMISES

***

311.1.1 Abandoned premises. Buildings, structures and premises ((~~for which an *owner* cannot be identified or located by dispatch of a certificate of mailing to the last known or registered address,~~)) which persistently or repeatedly become unprotected or unsecured, which have been occupied by unauthorized *persons* or for illegal purposes, or which present a danger of structural collapse or fire spread to adjacent properties ((~~shall~~)) may be considered abandoned, declared unsafe and abated by demolition or rehabilitation in accordance with the ((~~*International Property Maintenance Code* and the~~)) *International Building Code and Seattle Municipal Code*.

***

311.2.2 Fire protection. Fire alarm, sprinkler and standpipe systems shall be maintained in an operable condition at all times.

Exceptions:

1. When the premises have been cleared of all combustible materials and debris and, in the opinion of the *fire code official*, the type of construction, *fire separation distance* and security of the premises do not create a fire hazard.
2. Where *approved* by the *fire* ((~~chief~~)) *code official*, buildings that will not be heated and where *fire protection systems* will be exposed to freezing temperatures, fire alarm and sprinkler systems are permitted to be placed out of service and standpipes are permitted to be maintained as dry systems (without an automatic water supply),

provided the building has no contents or storage, and windows, doors and other openings are secured to prohibit entry by unauthorized *persons*.

***

311.5 Placards. ((~~A~~)) If any vacant or abandoned buildings or structures are determined to be unsafe pursuant to Section 110 of this code relating to structural or interior hazards the fire code official shall be authorized to require marking ((~~shall be marked~~)) as required by Sections 311.5.1 through 311.5.5.

***

SECTION 313

FUELED EQUIPMENT

313.1 General. Fueled equipment including, but not limited to, vehicles, watercraft, motorcycles, mopeds, lawn-care equipment, portable generators and portable cooking equipment, shall not be stored, operated or repaired within a building.

Exceptions:

1. Buildings or rooms constructed for such use in accordance with the *International Building Code*.
2. Where allowed by Section 314.
3. Storage of equipment utilized for maintenance purposes is allowed in *approved* locations when the aggregate fuel capacity of the stored equipment does not exceed 10 gallons (38 L) and the building is equipped throughout with an *automatic sprinkler system* installed in accordance with Section 903.3.1.1.

***

315.2.2.1 Storage under stairways. Storage is prohibited under exit stairways.

Exception: Enclosures under stairways in accordance with Section 1009.9.3.

***

315.2.5 Storage arrangements. Storage shall be within 20 feet of the two aisles each at least 44 inches wide. No block pile shall exceed 40 feet by 40 feet unless approved by the *fire code official*. No dead-end aisle shall be longer than 10 times the width. All storage in unsprinklered areas shall be within 150 feet (45720mm) aisle travel of fire department exterior access openings.

***

315.4.2 Height. Storage in the open shall not exceed 20 feet (6096 mm) in height.

Exception: Boat storage in accordance with NFPA 303.

***

315.6 Basement storage and sale of combustible materials. Storage and sale of combustible material in basements shall be in accordance with sections 315.6.1 through 315.6.5.

315.6.1 Storage room size. Combustible material being stored or available for sales shall be placed in rooms no larger than 500 sq.ft. (46.5 m^2)

315.6.2 Storage room construction. Each storage room shall be separated from other areas by fire barriers with at least one hour fire-resistance rating.

315.6.3 Number of storage rooms. There shall be a maximum of three storage rooms within any one basement.

315.6.4 Storage room access. Each storage room shall be provided with access directly from the building exterior, or through a one-hour fire resistance rated corridor between each room and an exterior door, or exit enclosure.

315.6.5 Storage room restrictions. Storage rooms shall not contain any material classified as a flammable liquid, hazardous material, or highly combustible material.

Exception: Areas protected with an approved automatic sprinkler system that are separated from other areas in the basement by fire barriers with at least a one-hour fire resistance.

***

SECTION 319

FIXED GUIDEWAY TRANSIT AND PASSENGER RAIL SYSTEMS

319.1 Fixed guideway transit and passenger rail systems. Fixed guideway transit and passenger rail systems shall be in accordance with NFPA 130 as amended.

319 Point of Information

Adopted local amendments to NFPA 130 can be accessed at

http://www.seattle.gov/fire/FMO/firecode/nfpaAmendments.htm

SECTION 320

ROAD TUNNELS, BRIDGES AND OTHER LIMITED ACCESS HIGHWAYS

320.1 Road tunnels, bridges and other limited access highways. Road tunnels, bridges, and other limited access highways shall be in accordance with NFPA 502 as amended.

320 Point of Information

Adopted local amendments to NFPA 502 can be accessed at

http://www.seattle.gov/fire/FMO/firecode/nfpaAmendments.htm

***

Section 6. Chapter 4 of the 2012 International Fire Code is amended as follows:

CHAPTER 4

EMERGENCY PLANNING AND PREPAREDNESS

SECTION 401

GENERAL

***

[W] 401.2 Approval. Where required by ((~~this code~~)) the *fire code official*, fire safety plans, emergency procedures and employee training programs shall be *approved* ((~~by the *fire code official*~~)).

***

401.9 Evacuation required. In the event of activation of a fire or emergency alarm, occupants of the building or portion of the building in which the alarm is activated shall make a safe and orderly evacuation out of the building, or as provided in the building's fire safety and evacuation plan.

Exceptions:

1. Where the occupant's physical or other disability makes the occupant unable to evacuate without assistance and no assistance is immediately available; or

2. Where the presence of smoke, fire, structural collapse or other hazard or obstruction in the occupant's means of egress makes evacuation unsafe.

SECTION 402

DEFINITIONS

402.1 Definition. The following terms are defined in Chapter 2.

[W] ALARM SIGNAL.

[W] ALERT SIGNAL.

[W] ALERT SYSTEM.

[W] EMERGENCY ((~~EVACUATION~~)) DRILL.

[W] ((~~LOCKDOWN.~~))

[W] SHELTER-IN-PLACE.

[W] RECALL SIGNAL.

SECTION 403

PUBLIC ASSEMBLAGES AND EVENTS

403.1 Fire watch and standby fire personnel. When, in the opinion of the *fire code official*, it is essential for public safety in a place of assembly or any other place where people congregate, because of the number of *persons*, or the nature of the performance, exhibition, display, contest or activity, the *owner*, agent or lessee shall provide, at no cost to the jurisdiction, one or more fire

watch personnel or *standby fire personnel*, as required and *approved*, to remain on duty during the times such places are open to the public, or when such activity is being conducted.

403.1.1 Duties. Fire watch personnel shall keep diligent watch for fires, obstructions to *means of egress* and other hazards during the time such place is open to the public or such activity is being conducted and take prompt measures for remediation of hazards, extinguishment of fires that occur and assist in the evacuation of the public from the structures. *Fire watch* personnel and *standby fire personnel* are subject to the *fire code official's* orders at all times; shall remain on duty during the times such places are open to the public, or as otherwise required by *fire code official;* and shall not be required or permitted, while on duty, to perform any duties other than those specified by the *fire code official.*

Where a *fire protection system* is out of service, the procedures detailed in Administrative Rule 9.06.07*, Out-Of-Service Fire and Life Safety Systems* and any future revisions of this rule adopted by the *fire code official* shall be implemented.

403.2 Public safety plan. ((~~In other than Group A or E occupancies, where the fire code official determines that an indoor or outdoor gathering of persons~~)) An approved public safety plan shall be developed for outdoor assembly events when the projected attendance exceeds 6,000 persons and for indoor or outdoor assembly events when the fire code official believes the event may have ((~~has~~)) an adverse impact on public safety through diminished access to buildings, structures, fire hydrants and fire apparatus access roads or ((~~where such gatherings~~)) may adversely affect public safety services of any kind. ((~~, the fire code official shall have the~~

~~authority to order the development of, or prescribe a plan for, the provision of an approved level of public safety.~~))

403.2.1 Contents. The public safety plan ((~~, where required by Section 403.2,~~)) shall ((~~address such items as emergency vehicle ingress and egress, fire protection, emergency egress or escape routes, emergency medical services, public assembly areas and the directing of both attendees and vehicles (including the parking of vehicles), vendor and food concession distribution, and the need for the presence of law enforcement, and fire and emergency medical services personnel at the event.~~)) include an assessment of all of the following conditions and related ((~~appropriate~~)) safety measures:

(1) Nature of the events and the participants and attendees

(2) Access and egress movement, including crowd density problems

(3) Medical emergencies

(4) Fire hazards and/or fire protection equipment provided

(5) Permanent and temporary structural systems

(6) Severe weather conditions

(7) Earthquakes

(8) Civil or other disturbances

(9) Hazardous materials incidents within and near the facility

(10) Acts of terrorism within and near the facility

(11) Relationships among facility management, event participants, emergency response agencies, and others having a role in the assembly events.

***

[W] SECTION 404

FIRE SAFETY AND ((~~EVACUATION~~)) EMERGENCY PLANS

[W] 404.1 General. Fire safety, evacuation and ((~~lockdown~~)) shelter-in-place plans and associated drills shall comply with the requirements of Sections 404.2 through 404.5.1.

[W] 404.2 Fire safety and evacuation plans. Fire safety and evacuation plans shall comply with the requirements of Sections 404.2.1 through 404.2.2.2.

[W] 404.2.1 Where required. A ((~~n *approved*~~)) fire safety and evacuation plan shall be prepared and maintained for the following occupancies and buildings.

1. Group A((~~, other than Group A occupancies used exclusively for purposes of religious worship that have an occupant load less than 2,000~~)) having an *occupant load* of 100 or more.
2. Group B buildings having an *occupant load* of 500 or more *persons* or more than 100 *persons* above or below the lowest *level of exit discharge*.
3. Group E.
4. Group F buildings having an *occupant load* of 500 or more *persons* or more than 100 *persons* above or below the lowest *level of exit discharge*.
5. Group H.

6. Group I.

7. Group R-1.

8. Group R-2 college and university buildings((~~.~~)) and boarding homes, group homes and residential treatment facilities licensed by the State of Washington.

((~~9. Group R-4.~~))

((~~10.~~))9. High-rise buildings.

((~~11.~~))10. Group M buildings having an *occupant load* of 500 or more *persons* or more than 100 *persons* above or below the lowest *level of exit discharge*.

((~~12.~~))11. Covered malls exceeding 50,000 square feet (4645 m2) in aggregate floor area.

((~~13.~~))12. Underground buildings.

((~~14.~~))13. Buildings with an atrium and having an occupancy in Group A, E or M.

404.2.1 Point of Information

The State of Washington does not adopt Group R-4 occupancies. Group R-4 occupancies are considered "Group R-2 occupancies licensed by the State of Washington". Special provisions may apply.

[W] 404.((~~3~~))**2.2 Contents.** Fire evacuation and safety plan contents shall be in accordance with Sections 404.((~~3.1~~))2.2.1 and 404.((~~3.2~~))2.2.2.

[W] 404.((~~3~~))**2.2.1 Fire evacuation plans.** Fire evacuation plans shall include the following:

1. Emergency egress or escape routes and whether evacuation of the building is to be complete or, where *approved*, by selected floors or areas only.
2. Procedures for employees who must remain to operate critical equipment before evacuating.
3. Procedures for assisted rescue for *persons* unable to use the general *means of egress* unassisted.
4. Procedures for accounting for employees and occupants after evacuation has been completed.
5. Identification and assignment of personnel responsible for rescue or emergency medical aid.
6. The preferred and any alternative means of notifying occupants of a fire or emergency.
7. The preferred and any alternative means of reporting fires and other emergencies to the fire department or designated emergency response organization.
8. Identification and assignment of personnel who can be contacted for further information or explanation of duties under the plan.
9. A description of the emergency voice/alarm communication system alert tone and preprogrammed voice messages, where provided.

[W] 404.((~~3~~))2.2.2 Fire safety plans. Fire safety plans shall include the following:

1. The procedure for reporting a fire or other emergency.

2. The life safety strategy and procedures for notifying, relocating or evacuating occupants, including occupants who need assistance.
3. Site plans indicating the following:
   3.1. The occupancy assembly point.
   3.2. The locations of fire hydrants.
   3.3. The normal routes of fire department vehicle access.
4. Floor plans identifying the locations of the following:
   4.1. Exits.
   4.2. Primary evacuation routes.
   4.3. Secondary evacuation routes.
   4.4. Accessible egress routes.
   4.5. Areas of refuge.
   4.6. Exterior areas for assisted rescue.
   4.7. Manual fire alarm boxes.
   4.8. Portable fire extinguishers.
   4.9. Occupant-use hose stations.
   4.10. Fire alarm annunciators and controls.
5. A list of major fire hazards associated with the normal use and occupancy of the premises, including maintenance and housekeeping procedures.
6. Identification and assignment of personnel responsible for maintenance of systems and equipment installed to prevent or control fires.

7. Identification and assignment of personnel responsible for maintenance, housekeeping and controlling fuel hazard sources.

[W] 404.3 Shelter-in-place. Shelter-in-place plans shall comply with the requirements of Sections 404.3.1 through 404.3.3.

[W] 404.3.1 Where required. A shelter-in-place plan shall be prepared and maintained for all Group E occupancies.

Exception: Daycares not collocated on a Group E campus.

[W] 404.3.2 Shelter-in-place plan contents. Shelter-in-place plans shall include the following:

1. Identification of the procedures for initiating the shelter-in-place plan throughout the facility or campus.
2. Identification of prearranged alert and recall signals to notify all occupants.
3. Identification of procedures for reporting the facility is sheltering-in-place to the local emergency dispatch center.
4. A means of two-way communication between a central location and each secure area.
5. Identification of protective security measures.
6. Location of emergency supplies.
7. Accountability procedures for staff to report the presence or absence of occupants.
8. Identification of crisis response team members in accordance with the National Incident Management System.

9. Actions to be taken in the event of a fire or medical emergency while sheltering-in-place.

[W] ((~~**404.3.3 Lockdown plans.** Where facilities develop a lockdown plan, the lockdown plan shall be in accordance with Sections 404.3.3.1 through 404.3.3.3.~~

~~**404.3.3.1 Lockdown plan contents.** Lockdown plans shall be *approved* by the *fire code official* and shall include the following:~~

~~1. Initiation. The plan shall include instructions for reporting an emergency that requires a lockdown.~~

~~2. Accountability. The plan shall include accountability procedures for staff to report the presence or absence of occupants.~~

~~3. Recall. The plan shall include a prearranged signal for returning to normal activity.~~

~~4. Communication and coordination. The plan shall include an *approved* means of two-way communication between a central location and each secured area.~~

~~**404.3.3.2 Training frequency.** The training frequency shall be included in the lockdown plan. The lockdown drills shall not substitute for any of the fire and evacuation drills required in Section 405.2.~~

~~**404.3.3.3 Lockdown notification.** The method of notifying building occupants of a lockdown shall be included in the plan. The method of notification shall be separate and distinct from the fire alarm signal.~~))

[W] 404.4 Maintenance. ((~~Fire safety and evacuation~~)) Emergency plans shall be reviewed or updated annually or as necessitated by changes in staff assignments, occupancy or the physical arrangement of the building.

404.5 Availability. ((~~Fire safety and evacuation~~)) Emergency plans shall be available in the workplace for reference and review by employees, and copies shall be furnished to the *fire code official* for review upon request.

***

[W] SECTION 405

EMERGENCY ((~~EVACUATION~~)) DRILLS

[W] 405.1 General. Emergency ((~~evacuation~~)) drills complying with the provisions of this section shall be conducted at least annually in the occupancies listed in Section 404.2.1 or when required by the *fire code official*. Drills shall be designed in cooperation with the local authorities.

[W] 405.2 Frequency. Required emergency ((~~evacuation~~)) drills shall be held at the intervals specified in Table 405.2 or more frequently where necessary to familiarize all occupants with the drill procedure.

[W] 405.2.1 Group E Occupancies. At a minimum the following drills shall be conducted during each year.

1. One drill using the school mapping information system

   Exception: Daycares not co-located on a school campus.

2. Six fire evacuation drills

3. One shelter-in-place drill

[W] TABLE 405.2
((~~FIRE AND EVACUATION~~)) EMERGENCY DRILL FREQUENCY AND PARTCIPATION

GROUP OR OCCUPANCY	FREQUENCY	PARTICIPATION
Group A	Quarterly	Employees
Group B[c]	Annually	Employees
Group E	Monthly[a,e]	All occupants
Group F	Annually	Employees
Group I	Quarterly on each shift	Employees((~~b~~))
Group R-1	Quarterly on each shift	Employees
Group R-2[f]	Quarterly on each shift	Employees
Group R-2[d]	Four Annually	All occupants
((~~Group R-4~~))	((~~Quarterly on each shift~~))	((~~Employees[b]~~))
High-rise buildings	Annually	Employees

a. The frequency shall be allowed to be modified in accordance with Section 408.3.2.

b. Fire and evacuation drills in residential care assisted living facilities shall include complete evacuation of the premises in accordance with Section 408.10.5. Where occupants receive habilitation or rehabilitation training, fire prevention and fire safety practices shall be included as part of the training program.

c. Group B buildings having an occupant load of 500 or more persons or more than 100 persons above or below the lowest level of exit discharge.

d. Applicable to Group R-2 college and university buildings in accordance with Section 408.3.

e. [W] Daycares collocated on a Group E campus shall participate in emergency drills occurring on the campus.

f. [W] Applicable to boarding homes, group homes, and residential treatment facilities licensed by the state of Washington.

Table 405.2 Point of Information

The State of Washington does not adopt Group R-4 occupancies. Group R-4 occupancies are considered "Group R-2 occupancies licensed by the state of Washington". Special provisions may apply.

***

[W] 405.4 Time. Drills shall be held at unexpected times and under varying conditions to simulate the unusual conditions that occur in case of ((~~fire.~~)) an emergency.

[W] 405.5 Record keeping. Records shall be maintained of required emergency ((~~evacuation~~)) drills and include the following information:

1. Identity of the *person* conducting the drill.
2. Date and time of the drill.
3. Notification method used.
4. Staff members on duty and participating.

5. Number of occupants ((~~evacuated~~)) participating.

6. Special conditions simulated.

7. Problems encountered and corrective actions taken.

8. Weather conditions when occupants were evacuated.

9. Time required to accomplish complete evacuation, or shelter-in-place.

[W] 405.6 Notification. Where required by the *fire code official*, prior notification of emergency ((~~evacuation~~)) drills shall be given to the *fire code official*.

[W] 405.7 Initiation. Emergency drills shall be initiated in accordance with Sections 405.7.1 through 405.7.3.

[W] 405.7.1 Fire evacuation drills. Where a fire alarm system is provided, emergency evacuation drills shall be initiated by activating the fire alarm system. The fire alarm monitoring company shall be notified prior to the activation of the fire alarm system for a proposed drill and again at the conclusion of the transmission and restoration of the fire alarm system to normal mode.

Exception: Evacuation drills conducted between the hours of 9 p.m. and 6 a.m. in Group R-2 boarding homes, group homes, and residential treatment facilities licensed by the State of Washington are not required to be initiated by the fire alarm system.

[W] 405.7.2 Shelter-in-place drills. Shelter-in-place drills shall be initiated by the shelter-in-place alert signal, generated by the alerting system in accordance with Section 915.

[W] 405.8 Accountability. As building occupants arrive at the assembly point, efforts shall be made to determine if all occupants have been successfully evacuated and/or have been accounted for in the shelter-in-place.

[W] 405.9 Recall and reentry. ((~~An electrically or mechanically operated signal used to recall occupants after an evacuation shall be separate and distinct from the signal used to initiate the evacuation.~~))The recall signal initiation means shall be manually operated and under the control of the *person* in charge of the premises or the official in charge of the incident. No one shall reenter the premises until authorized to do so by the official in charge.

SECTION 406

EMPLOYEE TRAINING AND RESPONSE PROCEDURES

[W] 406.1 General. Employees in the occupancies listed in Section 404.2.1 shall be trained in the ((~~fire~~))emergency procedures described in their ((~~fire evacuation and fire safety~~)) emergency plans. Training shall be based on the matters contained in the plans required and ((~~these plans and as~~))described in Sections 404.2 and 404.3.

[W] 406.2 Frequency. Employees shall receive training in the contents of the ((~~fire safety and evacuation~~)) emergency plans and their duties as part of new employee orientation and at least annually thereafter. Records shall be kept and made available to the *fire code official* upon request.

[W] 406.3 Employee training program. Employees shall be trained in fire prevention, evacuation, sheltering-in-place, and fire safety in accordance with Sections 406.3.1 through 406.3.4.

***

[W] 406.3.3 Emergency ((~~**lockdown**~~)) **shelter-in-place training.** Where a facility has a ((~~lockdown~~)) shelter-in-place plan, employees shall be trained on the alert and recall signals, communication system, location of emergency supplies, the use of the incident notification and alarm system and their assigned duties and procedures in the event of an ((~~emergency lockdown~~)) alarm or emergency.

***

SECTION 408

USE AND OCCUPANCY-RELATED REQUIREMENTS

***

408.2 Group A occupancies. Group A occupancies shall comply with the requirements of Sections 408.2.1 and 408.2.2 and Sections 401 through 406.

408.2.1 Seating plan. The fire safety and evacuation plans for assembly occupancies shall include the information required by Section 404. ((~~3~~)) 2.2 and a detailed seating plan, *occupant load* and *occupant load* limit. Deviations from the *approved* plans shall be allowed provided the *occupant load* limit for the occupancy is not exceeded and the *aisles* and exit accessways remain unobstructed.

***

[W] ((~~**408.10 Group R-4 occupancies.** Group R-4 occupancies shall comply with the requirements of Sections 408.10.1 through 408.10.5 and Sections 401 through 406.~~))

~~**408.10.1 Fire safety and evacuation plan.** The fire safety and evacuation plan required by Section 404 shall include special staff actions, including fire protection procedures necessary for residents, and shall be amended or revised upon admission of a resident with unusual needs.~~

~~**408.10.2 Staff training.** Employees shall be periodically instructed and kept informed of their duties and responsibilities under the plan. Such instruction shall be reviewed by the staff at least every two months. A copy of the plan shall be readily available at all times within the facility.~~

~~**408.10.3 Resident training.** Residents capable of assisting in their own evacuation shall be trained in the proper actions to take in the event of a fire. The training shall include actions to take if the primary escape route is blocked. Where the resident is given rehabilitation or habilitation training, training in fire prevention and actions to take in the event of a fire shall be a part of the rehabilitation training program. Residents shall be trained to assist each other in case of fire to the extent their physical and mental abilities permit them to do so without additional personal risk.~~

~~**408.10.4 Drill frequency.** Emergency evacuation drills shall be conducted at least six times per year, two times per year on each shift. Twelve drills shall be conducted in the first year of operation. Drills are not required to comply with the time requirements of Section 405.4.~~

~~**408.10.5 Resident participation.** Emergency evacuation drills shall involve the actual evacuation of residents to a selected assembly point and shall provide residents with~~

~~experience in exiting through all required exits. All required exits shall be used during emergency evacuation drills.~~

~~**Exception:** Actual exiting from windows shall not be required. Opening the window and signaling for help shall be an acceptable alternative.)~~)

408.10 Point of Information

The State of Washington does not adopt Group R-4 occupancies. Group R-4 occupancies are considered "Group R-2 occupancies licensed by the State of Washington". Special provisions may apply.

***

408.11.1 Lease plan. A lease plan shall be prepared for each covered and open mall building. The plan shall include the following information in addition to that required by Section 404.((~~3.2:~~))2.2.2:

1. Each occupancy, including identification of tenant.
2. *Exits* from each tenant space.
3. Fire protection features, including the following:
   - 3.1. Fire department connections.
   - 3.2. *Fire command center*.
   - 3.3. Smoke management system controls.
   - 3.4. Elevators, elevator machine rooms and controls.
   - 3.5. Hose valve outlets.

3.6. Sprinkler and standpipe control valves.

3.7. Automatic fire-extinguishing system areas.

3.8. Automatic fire detector zones.

3.9. *Fire barriers*.

408.11.1.1 ((~~**Approval**~~)) **Submittal.** The lease plan shall be submitted to the *fire code official* when required, and shall be maintained on site for immediate reference by responding fire service personnel.

***

Section 7. Chapter 5 of the 2012 International Fire Code is amended as follows:

CHAPTER 5

FIRE SERVICE FEATURES

***

SECTION 503

FIRE APPARATUS ACCESS ROADS

503.1 Where required. Fire apparatus access roads shall be provided and maintained in accordance with Sections 503.1.1 through 503.1.3 and Appendix D as amended.

***

503.2.1 Dimensions. Fire apparatus access roads shall have an unobstructed width of not less than 20 feet (6096 mm), exclusive of shoulders, except for *approved* security gates in accordance with Section 503.6, and an unobstructed vertical clearance of not less than ((~~13 feet 6 inches (4115 mm)~~)) 14 feet.

Exceptions:

1. Access roads serving not more than two Group R-3 or U occupancies shall have an unobstructed width of not less than 12 feet.
2. Public streets shall be in accordance with Seattle Right of Way Improvements Manual.

***

503.2.4 Turning radius. The required turning radius of a fire apparatus access road shall be ((~~determined by the *fire code official*.~~)) 25 feet minimum inside curb and 50 feet minimum outside curb.

503.2.5 Dead ends. Dead-end fire apparatus access roads in excess of 150 feet (45 720 mm) in length shall be provided with ((~~an *approved* area for turning around fire apparatus.~~)) a turnaround in accordance with Appendix D as amended.

503.2.6 Bridges and elevated surfaces. Where a bridge or an elevated surface is part of a fire apparatus access road, the bridge shall be constructed and maintained in accordance ((~~AASHTO HB 17.~~)) with the Seattle Right of Way Improvements Manual. Bridges and elevated surfaces shall be designed for a live load sufficient to carry the imposed loads of fire apparatus. Vehicle load limits shall be posted at both entrances to bridges when required by the *fire code official*. Where elevated surfaces designed for emergency vehicle use are adjacent to surfaces which are not designed for such use, *approved* barriers, *approved* signs or both shall be installed and maintained when required by the *fire code official*.

503.2.7 Grade. The grade of the fire apparatus access road shall be ((~~within the limits established by the *fire code official* based on the fire department's apparatus.~~)) in accordance with Appendix D as amended.

503.2.8 Angles of approach and departure. The angles of approach and departure for fire apparatus access roads shall be ((~~within the limits established by the *fire code official* based on the fire department's apparatus.~~)) in accordance with the Seattle Right of Way Improvements Manual.

***

503.6 Security gates. The installation of security gates across a fire apparatus access road shall be *approved* by the *fire* ((~~chief~~)) *code official*. Where security gates are installed, they shall have an *approved* means of emergency operation. The security gates and the emergency operation shall be maintained operational at all times. Electric gate operators, where provided, shall be *listed* in accordance with UL 325. Gates intended for automatic operation shall be designed, constructed and installed to comply with the requirements of ASTM F 2200.

***

SECTION 506

KEY BOXES

***

506.1 Where required. Key boxes shall be installed in accordance with this section:

506.1.1 Access key box. Where access to or within a structure or an area is restricted because of secured openings or where immediate access is necessary for life-saving or fire-fighting

purposes, the *fire code official* is authorized to require a key box to be installed in an *approved* location. The key box shall be of an *approved* type listed in accordance with UL 1037, and shall contain keys to gain necessary access as required by the *fire code official*.

506.1 Point of Information

The *fire code official* has approved the "KnoxBox" as the access key box for use in the City of Seattle. For more information see Seattle Fire Department Information Bulletin #965 Key Boxes for Emergency Access.

((~~**506.1.2 Key boxes for nonstandardized fire service elevator keys.** Key boxes provided for nonstandardized fire service elevator keys shall comply with Section 506.1 and all of the following:~~

~~1. The key box shall be compatible with an existing rapid entry key box system in use in the jurisdiction and *approved* by the *fire code official*.~~

~~2. The front cover shall be permanently labeled with the words "Fire Department Use Only – Elevator Keys."~~

~~3. The key box shall be mounted at each elevator bank at the lobby nearest to the lowest level of fire department access.~~

~~4. The key box shall be mounted 5 feet 6 inches (1676 mm) above the finished floor to the right side of the elevator bank.~~

~~5. Contents of the key box are limited to fire service elevator keys. Additional elevator access tools, keys and information pertinent to emergency planning or elevator access shall be permitted when authorized by the *fire code official*.~~

~~6. In buildings with two or more elevator banks, a single key box shall be permitted to be used when such elevator banks are separated by not more than 30 feet (9144 mm). Additional key boxes shall be pro- vided for each individual elevator or elevator bank separated by more than 30 feet (9144 mm).~~

~~**Exception:** A single key box shall be permitted to be located adjacent to a *fire command center* or the non- standard fire service elevator key shall be permitted to be secured in a key box used for other purposes and located in accordance with Section 506.1.~~))

506.1.2. Elevator key box. An elevator key box locked and keyed to the standard city elevator key box access key shall be provided at the designated recall floor above the Phase I recall switch or in the main lobby above the hall call button when no recall feature exists.

506.1.2.1 Elevator key box requirements. The elevator key box shall meet the following standards:

1. Dimensions – 6.5 inches high, 6 inches wide and 2 inches deep.
2. Material – 16 gauge steel welded.
3. Color – red unless located in the main lobby above the call button, six feet nominal above the floor, in which case any color is approved.
4. Labeling – "FOR EMERGENCY USE."
5. Lock – Ace 1-inch (25 mm) cylinder cam lock key #39504.
6. Mounting height shall be 6 feet nominal above floor.

506.1.2.2 Elevator key box contents. Keys for access to and for the operation of elevator equipment shall be tagged, labeled and retained in the key box. The elevator key box shall

contain standard and non-standard fire emergency service keys (Phase I and II, one key for each switch). The elevator key box may, in addition, contain keys for any or all of the following:

1. Machine room door;
2. Secondary level door;
3. Pit door;
4. Roof door;
5. Independent, hospital emergency and/or attendant operation;
6. Hoistway access;
7. Mechanical hoist access devices (broken arm, lunar, etc.);
8. Miscellaneous switch keys;
9. Fire alarm panel room;
10. Sprinkler valve control room

506.1.2.2 Point of Information

Due to security consideration, elevator key boxes should not contain master keys to tenant spaces. Keys in elevator key boxes should be limited to those for access of the building systems and equipment listed in *Seattle Fire Code*, Section 506.1.2.2.

((~~**506.1.1**~~)) **506.2 Locks.** An *approved* lock shall be installed on gates or similar barriers when required by the *fire code official*.

***

SECTION 507

FIRE PROTECTION WATER SUPPLIES

507.1 Required water supply. An *approved* water supply capable of supplying the required fire flow for fire protection shall be provided to premises upon which facilities, buildings or portions of buildings are hereafter constructed or moved into or within the jurisdiction, and for buildings undergoing a substantial alteration as determined by the Department of Planning and Development.

***

507.3 Fire flow. Fire flow requirements for buildings or portions of buildings and facilities shall be ((~~determined by an *approved* method.~~)) in accordance with Appendix B.

Exceptions:

1. Fire flow requirements for shipyards and designated marine hot work facilities shall be in accordance with Administrative Rule 26.02.09 and any future revisions to this rule adopted by the *fire code official*.
2. Fire flow requirements for new and existing covered marinas shall be in accordance with Chapters 36 and 94 respectively.
3. [W] Fire flow is not required for structures under 500 square feet with a B, U, or I occupancy where structures are at least 30 feet from any other structure and are used only for recreation.

***

507.5.6 Physical protection. Where fire hydrants are subject to impact by a motor vehicle, guard posts or other *approved* means shall comply with Section 312. Any horizontal, lateral or diagonal elements that are a part of the protection for a fire hydrant shall not interfere with the ability to freely access and safely operate the hydrant.

SECTION 508

FIRE COMMAND CENTER

508.1 General. Where required by other sections of this code and in all buildings classified as high-rise buildings by the *International Building Code*, a *fire command center* for fire department operations shall be provided and shall comply with Sections 508.1.1 through 508.1.5.

508.1.1 Location and access. The location and accessibility of the *fire command center* shall be *approved* by the ((~~fire chief~~)) *fire code official*.

[W] 508.1.2 Separation. The *fire command center* shall be separated from the remainder of the building by not less than a ((~~1~~)) 2-hour *fire barrier* constructed in accordance with Section 707 of the *International Building Code* or *horizontal assembly* constructed in accordance with Section 711 of the *International Building Code*, or both.

***

508.1.5 Required features. The *fire command center* shall comply with NFPA 72 and shall contain the following features:

1. The emergency voice/alarm communication system control unit.
2. The fire department communications system.
3. Fire detection and alarm system annunciator.

4. Annunciator unit visually indicating the location of the elevators and whether they are operational.

5. Status indicators and controls for air distribution systems.

6. The fire-fighter's control panel required by Section 909.16 for smoke control systems installed in the building.

7. Controls for unlocking *stairway* doors simultaneously.

8. Sprinkler valve and water-flow detector display panels.

9. Emergency and standby power status indicators.

10. A telephone for fire department use with controlled access to the public telephone system.

11. Fire pump status indicators.

12. Schematic building plans indicating the typical floor plan and detailing the building core, *means of egress*, *fire protection systems*, fire-fighting equipment and fire department access, and the location of *fire walls*, *fire barriers*, *fire partitions*, *smoke barriers* and smoke partitions.

13. An *approved* Building Information Card that contains, but is not limited to, the following information:

13.1 General building information that includes: property name, address, the number of floors in the building (above and below grade), use and occupancy classification (for mixed uses, identify the different types of occupancies on each floor), estimated building population (i.e., day, night, weekend);

13.2 Building emergency contact information that includes: a list of the building's emergency contacts (e.g., building manager, building engineer, etc.) and their respective work phone number, cell phone number, and e-mail address;

13.3 Building construction information that includes: the type of building construction (e.g., floors, walls, columns, and roof assembly);

13.4 Exit stair information that includes: number of *exit stairs* in the building, each *exit stair* designation and floors served, location where each *exit stair* discharges, *exit stairs* that are pressurized, *exit stairs* provided with emergency lighting, each *exit stair* that allows reentry, *exit stairs* providing roof access; elevator information that includes: number of elevator banks, elevator bank designation, elevator car numbers and respective floors that they serve, location of elevator machine rooms, location of sky lobby, location of freight elevator banks;

13.5 Building services and system information that includes: location of mechanical rooms, location of building management system, location and capacity of all fuel oil tanks, location of emergency generator, location of natural gas service;

13.6 *Fire protection system* information that includes: locations of standpipes, location of fire pump room, location of fire department connections, floors protected by *automatic sprinklers*, location of different types of *automatic sprinkler systems* installed (e.g., dry, wet, pre-action, etc.); and

13.7 Hazardous material information that includes: location of hazardous material, quantity of hazardous material.

14. Work table.

15. Generator supervision devices, manual start and ((~~transfer~~)) stop features.

16. Public address system, where specifically required by other sections of this code.

17. Elevator fire recall switch in accordance with ASME A17.1.

18. Elevator emergency or standby power selector switch(es), where emergency or *legally required standby power* is provided.

19. On-site fire protection water tank fill valve control switch, tank level indicators, tank low level alarm, and tank fill signal.

***

SECTION 510

EMERGENCY RESPONDER RADIO COVERAGE

510.1 Emergency responder radio coverage in new buildings. ((~~All new buildings shall have a~~)) A*pproved* radio coverage for emergency responders shall be provided within ((~~the~~)) buildings meeting any of the following conditions:

1. There are more than 5 *stories above grade plane* (as defined by the Seattle Building Code Section 202);

2. The total building area is 50,000 square feet or more;

3. The total *basement* area is 10,000 square feet or more; or

4. There are floors used for human occupancy more than 30 feet below the finished floor of the lowest level of exit discharge.

The radio coverage system shall be installed in accordance with Sections 510.4 through 510.5.3 of this code and with the provisions of NFPA 72, National Fire Alarm and Signaling Code. ((~~based upon the existing coverage levels of the public safety communication systems of the jurisdiction at the exterior of the building~~.)) This section shall not require improvement of the existing public safety communication systems.

Exceptions:

1. ((~~Where *approved* by the building official and the *fire code official*, a~~)) A wired communication system in accordance with Section 907.2.13.2 shall be permitted to be installed or maintained in lieu of an *approved* radio coverage system for buildings not classified as a high rise by the Seattle Building Code. For buildings without a *fire command center* the communications control equipment and portable handsets shall be located inside the building at the main building entrance, or other *approved* location.
2. Buildings and areas of buildings that have minimum radio coverage signal strength levels of the King County Regional 800 MHz Radio System within the building in accordance with Section 510.4.1 without the use of a radio coverage system. ((~~Where it is determined by the *fire code official* that the radio coverage system is not needed.~~))
3. In facilities where emergency responder radio coverage is required and such systems, components or equipment required could have a negative impact on the normal operations of that facility, the *fire code official* shall have the authority to accept an automatically activated emergency responder radio coverage system.
4. One and two family dwellings and townhouses.

510.2 Emergency responder radio coverage in existing buildings. Existing buildings shall be provided with *approved* radio coverage for emergency responders as required in Chapter 11.

510.3 Permit required. A construction permit for the installation of or modification emergency responder radio coverage systems and related equipment is required as specified in Section 105.7.5. Maintenance performed in accordance with this code is not considered a modification and does not require a permit.

510.4 Technical requirements. Systems, components, and equipment required to provide emergency responder radio coverage systems shall comply with Sections 511.4.1 through 511.4.2.5.

510.4.1 Radio signal strength. The building shall be considered to have acceptable emergency responder radio coverage when signal strength measurements in ((~~95~~)) 90 percent of all areas on each floor of the building meet the signal strength requirements in Sections 510.4.1.1 and 510.4.1.2.

510.4.1.1 Minimum signal strength into the building. A minimum signal strength of -95 dBm shall be receivable within the building when transmitted from the King County Regional 800 MHz Radio System.

510.4.1.2 Minimum signal strength out of the building. A minimum signal strength of -95 dBm shall be received by the King County Regional 800 MHz Radio System ((~~agency's radio system~~)) when transmitted from within the building.

Exception: Critical areas, such as the *fire command center*(s), the fire pump room(s), *interior exit stairways*, *exit passageways*, elevator lobbies, standpipe cabinets, sprinkler

sectional valve locations, and other areas required by the *fire code official*, shall be provided with 99 percent floor area radio coverage.

510.4.2 System design. The emergency responder radio coverage system shall be designed in accordance with Sections 510.4.2.1 through 510.4.2.5.

510.4.2.1 Amplification systems allowed. Buildings and structures which cannot support the required level of radio coverage shall be equipped with a radiating cable system, a distributed antenna system with Federal Communications Commission (FCC)-certified signal boosters, or other system allowed ((~~approved~~)) by the ((~~*fire code official*~~)) City of Seattle's Radio System Manager in order to achieve the required adequate radio coverage.

510.4.2.2 Technical criteria. The ((~~*fire code official*~~)) City of Seattle's Radio System Manager shall ((~~maintain a document providing the specific technical information and requirements for the emergency responder radio coverage system. This document shall contain, but not be limited to,~~)) provide the various frequencies required, the location of radio sites, effective radiated power of radio sites, and other supporting technical information upon request by the building owner or owner's representative.

510.4.2.3 ((~~Secondary~~)) Power supply sources. ((~~Emergency responder radio coverage systems shall be provided with an *approved* secondary source of power. The secondary power supply shall be capable of operating the emergency responder radio coverage system for a period of at least 24 hours. When primary power is lost, the power supply to the emergency responder radio coverage system shall automatically transfer to the secondary power supply.~~)) Emergency responder radio coverage systems shall be provided

with at least two independent and reliable power supply sources conforming to NFPA 72 and the Seattle Electrical Code, one primary and one secondary.

510.4.2.4 Signal booster requirements. If used, signal boosters shall meet the following requirements:

1. All signal booster components shall be contained in a National Electrical Manufacturer's Association (NEMA) 4-type or other *approved* enclosure.
2. Battery systems used for the emergency power source shall be contained in a NEMA 4-type waterproof cabinet.

   Exception: Listed battery systems that are contained in integrated battery cabinets.
3. The signal booster system and ((~~battery system shall be electrically supervised and~~)) power supply(ies) shall include automatic supervisory and trouble signals that are monitored by a supervisory service and are annunciated by the fire alarm system in accordance with NFPA 72 ((~~, or when *approved* by the *fire code official*, shall sound an audible signal at a constantly attended location~~)).

   Exception: For buildings without a fire alarm system, a dedicated monitoring panel in accordance with NFPA 72 shall be provided to annunciate automatic supervisory and trouble signals for the signal booster system and power supply(ies) and sound an audible signal at a constantly attended location.
4. Equipment shall have FCC certification prior to installation.

5. Unless otherwise approved by the City of Seattle's Radio System Manager, only channelized signal boosters shall be permitted.

510.4.2.5 Additional frequencies and change of frequencies. The emergency responder radio coverage system shall be capable of modification or expansion in the event frequency changes are required by the FCC or additional frequencies are made available by the FCC.

510.5 Installation requirements. The installation of the public safety radio coverage system shall be in accordance with Sections 510.5.1 through 510.5.4 ((~~5~~)).

510.5.1 Approval prior to installation. Amplification systems capable of operating on frequencies licensed to any public safety agency by the FCC shall not be installed without prior coordination and approval of the ((~~*fire code official*~~)) City of Seattle's Radio System Manager.

510.5. 2 Minimum qualifications of personnel. The minimum qualifications of the system designer and lead ((~~installation~~)) acceptance test personnel shall include:

1. A valid FCC-issued general radio operators license; and
2. Certification of in-building system training issued by or a certificate issued by the manufacturer of the equipment being installed.

((~~These qualifications shall not be required where demonstration of adequate skills and experience satisfactory to the *fire code official* is provided.~~))

510.5. 3 Acceptance test procedure and system certification. When an emergency responder radio coverage system is required, and upon completion of installation, the building

owner shall have the radio system tested to ensure that two-way coverage on each floor of the building is ((~~a minimum of 90 percent~~)) in accordance with Section 510.4.1. The test procedure shall be conducted as follows

1. ((~~Each floor of the building shall be divided into a grid of 20 approximately equal test areas.~~)) Talk-back testing from a site to the King County Regional 800 MHz Radio System shall use Seattle Fire Department radio(s) and be witnessed by a representative of the Seattle Fire Department.
2. ((~~The test shall be conducted using a calibrated portable radio of the latest brand and model used by the agency talking through the agency's radio communications system.~~)) Each floor of the building shall be divided into a grid of 20 approximately equal test areas.
3. ((~~Failure of a maximum of two nonadjacent test areas shall not result in failure of the test.~~)) A test location approximately in the center of each test area shall be selected for the test, with the radio enabled to verify two-way communications to and from the outside of the building through the King County Regional 800 MHz Radio System. Once the test location has been selected, that location shall represent the entire test area. Failure in the selected test location shall be considered failure of that test area.
4. ((~~In the event that three of the test areas fail the test, in order to be more statistically accurate, the floor shall be permitted to be divided into 40 equal test areas. Failure of a maximum of four nonadjacent test areas shall not result in failure of the test. If the system fails the 40-area test, the system shall be altered to meet the 90 percent coverage requirement.~~)) The test for emergency responder radio coverage will be considered passed

when 90% of the test locations on each floor are able to pass two-way communications to and from the outside of the building.

Exception: Critical areas shall be provided with 99 percent floor area radio coverage.

5. ((~~A test location approximately in the center of each test area shall be selected for the test, with the radio enabled to verify two-way communications to and from the outside of the building through the public agency's radio communications system. Once the test location has been selected, that location shall represent the entire test area. Failure in the selected test location shall be considered failure of that test area. Additional test locations shall not be permitted.~~)) In the event that three of the test areas on a floor fail the talk back test, in order to be more statistically accurate, the floor shall be permitted to be divided into 40 equal test areas. If the system fails the 90% coverage requirement for the 40-area test, the emergency responder radio system shall be altered to meet the 90 percent coverage requirement.

Exception: Critical areas shall be provided with 99 percent floor area coverage.

6. The gain values/output levels of all amplifiers shall be measured and the test measurement results shall be kept on file with the building *owner* so that the measurements can be verified during annual tests. In the event that the measurement results become lost, the building owner shall be required to rerun the acceptance test to reestablish the gain values.

7. As part of the installation a spectrum analyzer or other suitable test equipment shall be utilized to ensure spurious oscillations are not being generated by the subject signal

booster. This test shall be conducted at time of installation and subsequent annual inspections.

8. Prior to issuance of the building Certificate of Occupancy, the building owner or owner's representative shall provide the Seattle Fire Department with a certification letter stating that the emergency responder radio coverage system has been installed and tested in accordance with Sections 510.4 and 510.5, and that the system is complete and fully functional. A system acceptance test report shall be submitted to the City of Seattle's Radio System Manager, maintained on the premises and be made available to the fire department upon request. The report shall verify compliance with Section 510.5.4, and include the emergency responder radio coverage system equipment data sheets, diagram showing device locations and wiring schematic, and a copy of the electrical permit and system certification letter.

510.5.4 FCC compliance. The emergency responder radio coverage system installation and components shall also comply with all applicable federal regulations including, but not limited to, FCC 47 CFR Part 90.219.

510.6 Maintenance. The emergency responder radio coverage system shall be maintained operational at all times in accordance with Sections 510.6.1 through 510.6.((~~3~~))5.

510.6.1 Testing and proof of compliance. The emergency responder radio coverage system shall be inspected and tested annually or whenever structural changes occur including additions or remodels that could materially change the original field performance tests. Testing shall consist of the following:

1. In-building coverage test as described in Section 510.5.4.
2. Signal boosters shall be tested to ensure that the gain/output level is the same as it was upon initial installation and acceptance.
3. Backup batteries and power supplies shall be tested under load of a period of one hour to verify that they will properly operate during an actual power outage. If within the 1-hour test period the battery exhibits symptoms of failure, the test shall be extended for additional 1-hour periods until the integrity of the battery can be determined.
4. All other active components shall be checked to verify operation within the manufacturer's specifications.
5. At the conclusion of the testing, a report, which shall verify compliance with Sections 510.5.~~4~~ and 510.6 shall be ((~~submitted to the *fire code official*~~)) maintained on the premises and be made available to the fire department upon request.

510.6.2 Additional frequencies. The building *owner* shall modify or expand the emergency responder radio coverage system at their expense in the event frequency changes are required by the FCC or additional frequencies are made available by the FCC. Prior approval of a public safety radio coverage system on previous frequencies does not exempt this section.

510.6.3 Field testing. ((~~Agency~~)) Seattle Fire Department personnel shall have the right to enter onto the property at any reasonable time to conduct field testing to verify the required level of radio coverage.

510.6.4 Qualifications of testing personnel. All tests shall be documented and signed by a person in possession of a current FCC General Radiotelephone Operator license, or a current

technician certification issued by a nationally recognized organization, school or a certificate issued by the manufacturer of the equipment being installed.

510.6.5 Continuing operation/supervision. The occurrence of any fault in an emergency responder radio coverage system where the system function is decreased shall result in the transmission of a supervisory signal to a supervisory service. Systems that are out-of-service for more than 8 hours require notification to the *fire code official*.

Section 8. Chapter 6 of the 2012 International Fire Code is amended as follows:

CHAPTER 6

BUILDING SERVICES AND SYSTEMS

SECTION 601

GENERAL

601.1 Scope. The provisions of this chapter shall apply to the installation, operation and maintenance of fuel-fired appliances and heating systems, emergency power systems and *legally required standby power systems*, electrical systems and equipment, mechanical refrigeration systems, elevator recall, stationary storage battery systems and commercial kitchen equipment.

601.2 Permits. Permits shall be obtained for refrigeration systems, battery systems, fuel tanks connected to emergency and *legally required standby power systems*, and solar photovoltaic power systems as set forth in Sections 105.6 and 105.7.

***

SECTION 603

FUEL-FIRED APPLIANCES

***

603.3.2.1 Quantity limits. One or more fuel oil storage tanks containing Class II or III *combustible liquid* shall be permitted in a building. The aggregate capacity of all such tanks shall not exceed 660 gallons (2498 L).

Exceptions:

1. The aggregate capacity limit shall be permitted to be increased to 3,000 gallons (11 356 L) of Class II or III liquid for storage in protected above-ground tanks complying with Section 5704.2.9.7, when all of the following conditions are met:

   1.1 The entire 3,000-gallon (11 356 L) quantity shall be stored in protected above-ground tanks;

   1.2 The 3,000-gallon (11 356 L) capacity shall be permitted to be stored in a single tank or multiple smaller tanks; and

   1.3 The tanks shall be located in a room protected by an *automatic sprinkler system* complying with Section 903.3.1.1.

2. Tanks installed in accordance with Administrative Rule 34.01.04 *Use of Protected Aboveground Tanks For Fuel Storage Inside Buildings* and any future revisions of this rule adopted by the fire code official.

***

[W] 603.4 Portable unvented heaters. Portable unvented fuel-fired heating equipment shall be prohibited in occupancies in Groups A, E, I, R-1, R-2, and R-3((~~and R-4~~)).

Exceptions:

1. *Listed* and *approved* unvented fuel-fired heaters, including portable outdoor gas-fired heating appliances, in one- and two-family *dwellings*.

2. Portable outdoor gas-fired heating appliances shall be allowed in accordance with Section 603.4.2.

***

SECTION 604

EMERGENCY AND LEGALLY REQUIRED STANDBY POWER SYSTEMS

***

604.2 Where required. Emergency and *legally required standby power systems* shall be provided where required by Sections 604.2.1 through 604.2.18.4.

***

604.2.2 Smoke control systems. ((~~Standby~~)) Emergency power shall be provided for smoke control systems in accordance with Section 909.11.

Exception: *Legally required standby power* is acceptable for shaft pressurization systems in low-rise buildings.

***

604.2.5 Accessible means of egress elevators. *Legally required ((*~~*S*~~*)) standby power* shall be provided for elevators that are part of an accessible *means of egress* in accordance with Section 1007.4.

604.2.6 Accessible means of egress platform lifts. *Legally required* *((~~S~~))standby power* in accordance with this section or ASME A18.1 shall be provided for platform lifts that are part of an accessible *means of egress* in accordance with Section 1007.5.

604.2.7 Horizontal sliding doors. *Legally required((~~S~~))standby power* shall be provided for horizontal sliding doors in accordance with Section 1008.1.4.3.

***

604.2.9 Membrane structures. Emergency power shall be provided for *exit* signs in temporary tents and membrane structures in accordance with Section 3103.12.6.1. *Legally required((~~S~~))standby power* shall be provided for auxiliary inflation systems in permanent membrane structures in accordance with the *International Building Code*.

604.2.10 Hazardous materials. Emergency or *legally required standby power* shall be provided in occupancies with hazardous materials in accordance with Sections 5004.7 and 5005.1.5.

***

604.2.12 Organic peroxides. *Legally required* *((~~S~~))standby power* shall be provided for occupancies with organic peroxides in accordance with Section 6204.1.11.

604.2.13 Covered and open mall buildings. Covered mall buildings exceeding 50,000 square feet (4645 m^2) and open mall buildings exceeding 50,000 square feet (4645 m^2) within the established perimeter line shall be provided with *legally required standby power* systems which are capable of operating the emergency voice/alarm communication.

604.2.14 High-rise buildings. ((~~Standby p~~))Power, light and emergency systems in high-rise buildings shall comply with the requirements of Sections 604.2.14.1 through 604.2.14.3.

604.2.14.1 ((~~Standby~~)) Emergency power. An ((~~standby~~)) emergency power system shall be provided. Where the ((~~standby~~)) emergency system is a generator set inside a building, the system shall be located in a separate room enclosed with 2-hour *fire barriers* constructed in accordance with Section 707 of the *International Building Code* or *horizontal assemblies* constructed in accordance with Section 711 of the *International Building Code*, or both. System supervision with manual start and transfer features shall be provided at the *fire command center*.

Exception: A separate room for the generator set is not required for systems having fuel quantities meeting the limits of Section 603.3 when located in a sprinklered parking garage of Type I or II construction.

604.2.14.1.1 Fuel supply. An on-premises fuel supply, sufficient for not less than 2-hour full-demand operation of the system, shall be provided.

((~~**Exception:** When *approved*, the system shall be allowed to be supplied by natural gas pipelines.~~))

604.2.14.1.2 Capacity. The ((~~standby~~)) emergency system shall have a capacity and rating that supplies all equipment required to be operational at the same time. The generating capacity is not required to be sized to operate all of the connected electrical equipment simultaneously.

604.2.14.1.3 Connected facilities. Power and lighting facilities for the *fire command center* and elevators specified in Sections 403.((~~4.8.3~~))9 and 403.6 of the *International Building Code*, as applicable, shall be transferable to the ((~~standby~~)) emergency source. ((~~Standby~~)) Emergency power shall be provided for at least one elevator to serve all floors and be transferable to any elevator.

604.2.14.2 Separate circuits and luminaires. Separate lighting circuits and luminaires shall be required to provide sufficient light with an intensity of not less than 1 foot-candle (11 lux) measured at floor level in all *means of egress corridors*, *stairways*, smokeproof enclosures, elevator cars and lobbies, and other areas that are clearly a part of the escape route.

604.2.14.2.1 Other circuits. Circuits supplying lighting for the *fire command center* and mechanical equipment rooms shall be transferable to the ((~~standby~~)) emergency source.

604.2.14.3 Emergency systems. *Exit* signs, *exit* illumination as required by Chapter 10, electrically powered fire pumps required to maintain pressure, and elevator car lighting are classified as emergency systems and shall operate within 10 seconds of failure of the normal power supply and shall be capable of being transferred to the ((~~standby~~)) emergency source.

Exception: *Exit* sign, *exit* and *means of egress* illumination are permitted to be powered by a standby source in buildings of Group F and S occupancies.

604.2.15 Underground buildings. Emergency ((~~and standby~~)) power systems in underground buildings covered in Chapter 4 of the *International Building Code* shall comply with Sections 604.2.15.1 and 604.2.15.2.

604.2.15.1 ((~~Standby~~)) Emergency power. An ((~~standby~~)) emergency power system complying with this section and NFPA 70 shall be provided for ((~~standby~~)) emergency power loads as specified in Section 604.2.15.1.1.

[B] 604.2.15.1.1 ((~~Standby~~)) Emergency power loads. The following loads are classified as ((~~standby~~)) emergency power loads:

1. Smoke control system.
2. Ventilation and automatic fire detection equipment for smokeproof enclosures.
3. Fire pumps.
4. ((~~Standby~~))Emergency power shall be provided for elevators in accordance with Section 3003 of the *International Building Code* and escalators in accordance with NFPA 130.
5. Emergency voice/alarm communication systems.
6. Fire alarm systems.
7. Automatic fire detection systems.
8. Elevator car lighting.
9. Means of egress lighting and exit sign illumination as required by Chapter 10.

[B] 604.2.15.1.2 Pickup time. The ((~~standby~~)) emergency power system shall pick up its connected loads within 60 seconds of failure of the normal power supply.

~~**604.2.15.2 Emergency power.** An emergency power system complying with this code and NFPA 70 shall be provided for emergency power loads as specified in Section 604.2.15.2.1.~~

~~**604.2.15.2.1 Emergency power loads.** The following loads are classified as emergency power loads:~~

~~1. Emergency voice/alarm communication systems.~~

~~2. Fire alarm systems.~~

~~3. Automatic fire detection systems.~~

~~4. Elevator car lighting.~~

~~5. *Means of egress* lighting and *exit* sign illumination as required by Chapter 10.~~))

***

604.2.17 Airport traffic control towers. A legally required standby power system shall be provided in airport traffic control towers more than 65 feet (19 812 mm) in height. Power shall be provided to the following equipment:

1. Pressurization equipment, mechanical equipment and lighting.
2. Elevator operating equipment.
3. Fire alarm and smoke detection systems.

604.2.18 Elevators. In buildings and structures where legally required standby or emergency power is required or furnished to operate an elevator, the operation shall be in accordance with Sections 604.2.18.1 through 604.2.18.4.

604.2.18.1 Manual transfer. ((~~Standby~~)) legally required standby power or emergency power shall be manually transferable to all elevators in each bank.

604.2.18.2 One elevator. Where only one elevator is installed, the elevator shall automatically transfer to ((~~standby~~)) legally required standby power or emergency power within 60 seconds after failure of normal power.

604.2.18.3 Two or more elevators. Where two or more elevators are controlled by a common operating system, all elevators shall automatically transfer to ((~~standby~~)) legally required standby power and emergency power within 60 seconds after failure of normal power where the ((~~standby~~)) legally required standby power and emergency power source is of sufficient capacity to operate all elevators at the same time. Where the ((~~standby~~)) legally required standby power and emergency power source is not of sufficient capacity to operate all elevators at the same time, all elevators shall transfer to ((~~standby~~)) legally required standby power and emergency power in sequence, return to the designated landing and disconnect from the ((~~standby~~)) legally required standby power and emergency power source. After all elevators have been returned to the designated level, at least one elevator shall remain operable from the ((~~standby~~)) legally required standby power and emergency power source.

604.2.18.4 Machine room ventilation. Where ((~~standby~~)) legally required standby or emergency power is connected to elevators, the machine room ventilation or air conditioning shall be connected to the ((~~standby~~)) legally required standby or emergency power source.

604.2.19 Refrigeration systems. If treatment, detection, continuous ventilation, or alarm systems are required for refrigeration systems, such systems shall be connected to a legally-required standby source of power to supply electrical power in the event of loss from the primary source.

604.3 Maintenance. Emergency and *legally required standby power* systems shall be maintained in accordance with NFPA 110 and NFPA 111 such that the system is capable of supplying service within the time specified for the type and duration required.

604.3.1 Schedule. Inspection, testing and maintenance of emergency and *legally required standby power* systems shall be in accordance with an *approved* schedule established upon completion and approval of the system installation.

604.3.2 Written record. Written records of the inspection, testing and maintenance of emergency and *legally required standby power* systems shall include the date of service, name of the servicing technician, a summary of conditions noted and a detailed description of any conditions requiring correction and what corrective action was taken. Such records shall be kept on the premises served by the emergency or *legally required standby power* system and ((~~be available for inspection by~~))shall be submitted to the *fire code official* in accordance with Administrative Rule 9.02.09, *Confidence Test Requirements for Life Safety Systems* and any future revisions of this rule adopted by the *fire code official*.

604.3.3 Switch maintenance. Emergency and *legally required standby power* system transfer switches shall be included in the inspection, testing and maintenance schedule required by Section 604.3.1. Transfer switches shall be maintained free from accumulated dust and dirt.

Inspection shall include examination of the transfer switch contacts for evidence of deterioration. When evidence of contact deterioration is detected, the contacts shall be replaced in accordance with the transfer switch manufacturer's instructions.

604.4 Operational inspection and testing. Emergency power systems, including all appurtenant components shall be inspected and tested under load in accordance with NFPA 110 and NFPA 111.

Exception: Where the emergency <u>or legally required</u> power system is used for *standby power* or peak load shaving, such use shall be recorded and shall be allowed to be substituted for scheduled testing of the generator set, provided that appropriate records are maintained.

***

SECTION 605

ELECTRICAL EQUIPMENT, WIRING AND HAZARDS

***

[<u>W</u>]((~~605.11 Solar photovoltaic power systems.~~ ~~Solar photovoltaic power systems shall be installed in accordance with Sections 605.11.1 through 605.11.4, the *International Building Code* and NFPA 70.~~

~~**Exception:** Detached, nonhabitable Group U structures including, but not limited to, parking shade structures, carports, solar trellises and similar structures shall not be subject to the requirements of this section.~~

~~**605.11.1 Marking.** Marking is required on interior and exterior direct-current (DC) conduit, enclosures, race- ways, cable assemblies, junction boxes, combiner boxes and disconnects.~~

~~**605.11.1.1 Materials.** The materials used for marking shall be reflective, weather resistant and suitable for the environment. Marking as required in Sections 605.11.1.2 through 605.11.1.4 shall have all letters capitalized with a minimum height of 3/8 inch (9.5 mm) white on red background.~~

~~**605.11.1.2 Marking content.** The marking shall contain the words "WARNING: PHOTOVOLTAIC POWER SOURCE."~~

~~**605.11.1.3 Main service disconnect.** The marking shall be placed adjacent to the main service disconnect in a location clearly visible from the location where the disconnect is operated.~~

~~**605.11.1.4 Location of marking.** Marking shall be placed on interior and exterior DC conduit, raceways, enclosures and cable assemblies every 10 feet (3048 mm), within 1 foot (305 mm) of turns or bends and within 1 foot (305 mm) above and below penetrations of roof/ceiling assemblies, walls or barriers.~~

~~**605.11.2 Locations of DC conductors.** Conduit, wiring systems, and raceways for photovoltaic circuits shall be located as close as possible to the ridge or hip or valley and from the hip or valley as directly as possible to an outside wall to reduce trip hazards and maximize ventilation opportunities. Conduit runs between sub arrays and to DC combiner boxes shall be installed in a manner that minimizes the total amount of conduit on the roof by taking the shortest path from the array to the DC combiner box. The DC combiner boxes shall be located such that conduit runs are minimized in the pathways between arrays. DC~~

~~wiring shall be installed in metallic conduit or raceways when located within enclosed spaces in a building. Conduit shall run along the bottom of load bearing members.~~

~~**605.11.3 Access and pathways.** Roof access, pathways, and spacing requirements shall be provided in accordance with Sections 605.11.3.1 through 605.11.3.3.3.~~

~~**Exceptions:**~~

~~1. Residential structures shall be designed so that each photovoltaic array is no greater than 150 feet (45720 mm) by 150 feet (45720 mm) in either axis.~~

~~2. Panels/modules shall be permitted to be located up to the roof ridge where an alternative ventilation method approved by the fire chief has been provided or where the fire chief has determined vertical ventilation techniques will not be employed.~~

~~**605.11.3.1 Roof access points.** Roof access points shall be located in areas that do not require the placement of ground ladders over openings such as windows or doors, and located at strong points of building construction in locations where the access point does not conflict with overhead obstructions such as tree limbs, wires, or signs.~~

~~**605.11.3.2 Residential systems for one- and two- family dwellings.** Access to residential systems for one- and two-family dwellings shall be provided in accordance with Sections 605.11.3.2.1 through 605.11.3.2.4.~~

~~**605.11.3.2.1 Residential buildings with hip roof layouts.** Panels/modules installed on residential buildings with hip roof layouts shall be located in a manner that provides a 3-foot-wide (914 mm) clear access pathway from the eave to the ridge on each roof~~

~~slope where panels/modules are located. The access pathway shall be located at a structurally strong location on the building capable of supporting the live load of fire fighters accessing the roof.~~

~~**Exception:** These requirements shall not apply to roofs with slopes of two units vertical in 12 units horizontal (2:12) or less.~~

~~**605.11.3.2.2 Residential buildings with a single ridge.** Panels/modules installed on residential buildings with a single ridge shall be located in a manner that provides two, 3-foot-wide (914 mm) access pathways from the eave to the ridge on each roof slope where panels/modules are located.~~

~~**Exception:** This requirement shall not apply to roofs with slopes of two units vertical in 12 units horizontal (2:12) or less.~~

~~**605.11.3.2.3 Residential buildings with roof hips and valleys.** Panels/modules installed on residential buildings with roof hips and valleys shall be located no closer than 18 inches (457 mm) to a hip or a valley where panels/modules are to be placed on both sides of a hip or valley. Where panels are to be located on only one side of a hip or valley that is of equal length, the panels shall be permitted to be placed directly adjacent to the hip or valley.~~

~~**Exception:** These requirements shall not apply to roofs with slopes of two units vertical in 12 units horizontal (2:12) or less.~~

~~**605.11.3.2.4 Residential building smoke ventilation.** Panels/modules installed on residential buildings shall be located no higher than 3 feet (914 mm) below the ridge in order to allow for fire department smoke ventilation operations.~~

~~**605.11.3.3 Other than residential buildings.** Access to systems for occupancies other than one- and two- family dwellings shall be provided in accordance with Sections 605.11.3.3.1 through 605.11.3.3.3.~~

~~**Exception:** Where it is determined by the *fire code official* that the roof configuration is similar to that of a one- or two-family dwelling, the residential access and ventilation requirements in Sections 605.11.3.2.1 through 605.11.3.2.4 shall be permitted to be used.~~

~~**605.11.3.3.1 Access.** There shall be a minimum 6- foot-wide (1829 mm) clear perimeter around the edges of the roof.~~

~~**Exception:** Where either axis of the building is 250 feet (76 200 mm) or less, there shall be a minimum 4-foot-wide (1290 mm) clear perimeter around the edges of the roof.~~

~~**605.11.3.3.2 Pathways.** The solar installation shall be designed to provide designated pathways. The pathways shall meet the following requirements:~~

~~1. The pathway shall be over areas capable of supporting the live load of fire fighters accessing the roof.~~

~~2. The centerline axis pathways shall be provided in both axes of the roof. Centerline axis pathways shall run where the roof structure is capable of~~

~~supporting the live load of fire fighters accessing the roof.~~

~~3. Shall be a straight line not less than 4 feet (1290 mm) clear to skylights or ventilation hatches.~~

~~4. Shall be a straight line not less than 4 feet (1290 mm) clear to roof standpipes.~~

~~5. Shall provide not less than 4 feet (1290 mm) clear around roof access hatch with at least one not less than 4 feet (1290 mm) clear pathway to parapet or roof edge.~~

~~**605.11.3.3.3 Smoke ventilation.** The solar installation shall be designed to meet the following requirements:~~

~~1. Arrays shall be no greater than 150 feet (45720 mm) by 150 feet (45 720 mm) in distance in either axis in order to create opportunities for fire department smoke ventilation operations.~~

~~2. Smoke ventilation options between array sections shall be one of the following:~~

~~2.1. A pathway 8 feet (2438 mm) or greater in width.~~

~~2.2. A 4 foot (1290 mm) or greater in width pathway and bordering roof skylights or smoke and heat vents.~~

~~2.3. A 4 foot (1290 mm) or greater in width pathway and bordering 4 foot by 8 foot (1290 mm by 2438 mm) "venting cutouts" every 20 feet (6096 mm) on alternating sides of the pathway.~~

~~**605.11.4 Ground-mounted photovoltaic arrays.** Ground-mounted photovoltaic arrays shall comply with Sections 605.11 through 605.11.2 and this section. Setback requirements~~

~~shall not apply to ground-mounted, free-standing photovoltaic arrays. A clear, brush-free area of 10 feet (3048 mm) shall be required for ground- mounted photovoltaic arrays.~~))

***

SECTION 606

MECHANICAL REFRIGERATION

***

606.8 Refrigerant ((~~**detector**~~)) **detection system.** Machinery rooms shall contain a refrigerant ((~~detector~~)) detection system with an audible and visual alarm. The detector, or a sampling tube that draws air to the detector, shall be located in an area where refrigerant from a leak will concentrate. The alarm shall be actuated at a value not greater than the corresponding TLV-TWA values shown in the ((~~*International*~~))*Seattle Mechanical Code* for the refrigerant classification. Detectors and alarms shall be placed in *approved* locations. The detectors shall transmit a signal to an approved location.

***

606.17 Standby power. Where mechanical ventilation, treatment systems, temperature control, alarm, detection or other electrically operated systems are required, such systems shall be provided with legally required standby power.

Exception: Legally required standby power is not required where an approved fail-safe engineered system is installed.

SECTION 607

ELEVATOR OPERATION,

MAINTENANCE AND FIRE SERVICE KEYS

607.1 Emergency operation. Existing elevators with a travel distance of 25 feet (7620 mm) or more shall comply with the requirements in Chapter 46. New elevators shall be provided with Phase I emergency recall operation and Phase II emergency in-car operation in accordance with ASME A17.1 and Seattle Building Code.

***

607.4 Elevator key location. Keys for the elevator car doors and fire-fighter service keys shall be kept in an ((~~*approved* location for immediate use by the fire department.~~)) elevator key box in accordance with section 506.1.2.

607.5 Standardized fire service elevator keys. Buildings with elevators equipped with Phase I emergency recall, Phase II emergency in-car operation, or a fire service access elevator shall be equipped to operate with a standardized fire service elevator key *approved* by the *fire code official.*

((~~Exception:~~ ~~The owner shall be permitted to place the building's nonstandardized fire service elevator keys in a key box installed in accordance with Section 506.1.2.~~))

***

SECTION 608

STATIONARY STORAGE BATTERY SYSTEMS

608.1 Scope. Stationary storage battery systems having an electrolyte capacity of more than 50 gallons (189 L) for flooded lead-acid, nickel cadmium (Ni-Cd) and valve-regulated lead-acid VRLA, or 1,000 pounds (454 kg) for lithium-ion and lithium metal polymer, used for facility

legally required standby power, emergency power or uninterrupted power supplies shall comply with this section and Table 608.1.

***

SECTION 609

COMMERCIAL KITCHEN HOODS

***

[W] [M] 609.2 Where required. A Type I hood shall be installed at or above all commercial cooking appliances and domestic cooking appliances used for commercial purposes that produce grease vapors.

Exceptions:

1. A type I hood is not required to be installed in R-2 occupancies licensed by the State of Washington.
2. A Type I hood shall not be required for an electric cooking appliance where an approved testing agency provides documentation that the appliance effluent contains 5 mg/m^3 or less of grease when tested at an exhaust flow rate of 500 cfm in accordance with Section 17 of UL 710B.

[W] 609.3 Operations and maintenance. Commercial cooking systems shall be operated and maintained in accordance with Sections 609.3.1 through 609.3.4 and Chapter 11 of NFPA 96.

***

SECTION 610

COMMERCIAL KITCHEN COOKING OIL STORAGE

610.4 Tank Venting. Normal and emergency venting for cooking oil storage tanks shall terminate ((~~outside the building~~)) as specified in Sections 5704.2.7.3 and 5704.2.7.4.

***

Section 9. Chapter 8 of the 2012 International Fire Code is amended as follows:

CHAPTER 8

INTERIOR FINISH, DECORATIVE MATERIALS AND FURNISHINGS

***

SECTION 806

DECORATIVE VEGETATION IN NEW AND EXISTING BUILDINGS

***

[W] 806.1.1 Restricted occupancies. Natural cut trees shall be prohibited in Group ((~~A, E,~~)) I-1, I-2, I-3, I-4, ((~~M, R-1,~~)) and R-2 ((~~and R-4~~)) occupancies((~~.~~)) providing licensed care to clients in one of the categories listed in Section 310.1 of the *International Building Code* licensed by Washington state.

((~~**Exceptions:**~~

~~1. Trees located in areas protected by an approved automatic sprinkler system installed in accordance with Section 903.3.1.1 or 903.3.1.2 shall not be prohibited in Groups A, E, M, R-1 and R-2.~~

~~2. Trees shall be allowed within dwelling units in Group R-2 occupancies.~~))

[W] 806.1.2 Support devices. The support device that holds the tree in an upright position shall be of a type that is stable and that meets all of the following criteria:

1. The device shall hold the tree securely and be of adequate size to avoid tipping over of the tree.
2. The device shall be capable of containing a minimum ((~~two-day~~)) supply of water in accordance with Table 806.1.2.
3. The water level, when full, shall cover the tree stem at least 2 inches (51 mm). The water level shall be maintained above the fresh cut and checked at least once daily.

[W] TABLE 806.1.2

SUPPORT STAND WATER CAPACITY

TREE STEM DIAMETER (inches)	MINIMUM SUPPORT STAND WATER CAPACITY (gallons)	TYPICAL DAILY WATER EVAPORATION AMOUNT (gallons)
Up to 4	1	1/4 to 1

4 to 6	1 1/2	1 1/4 to 1 1/2
7 to 8	2	1 3/4 to 2
9 to 12	3	2 1/4 to 3
13 and over	4	Over 3

***

SECTION 807

DECORATIVE MATERIALS OTHER THAN DECORATIVE VEGETATION IN NEW AND EXISTING BUILDINGS

***

807.2 Acceptance criteria and reports. Where required to be flame resistant, decorative materials shall be tested by an *approved* agency and meet the flame propagation performance criteria of NFPA 701 or other *approved* standard, or such materials shall be noncombustible. Reports of test results shall be prepared in accordance with NFPA701 and furnished to the *fire code official* upon request.

807.2 Point of Information

Acceptable flame certificates for decorative materials include:

1. Certificates indicating compliance with NFPA 701.

2. Certificates verifying approval through the California State Fire Marshal.

3. Certificates indicating compliance with CPAI-84 (*Canvas Products Association International*).

***

Section 10. Chapter 9 of the 2012 International Fire Code is amended as follows:

CHAPTER 9

FIRE PROTECTION SYSTEMS

SECTION 901

GENERAL

***

901.4.7 Certification. Individuals who install, inspect, test or maintain *fire protection systems* or portable fire extinguishers shall obtain the proper certificate from the *fire code official* in accordance with Administrative Rule 9.01.13, *Certification for Installing, Maintaining and Testing Life Safety Systems and Equipment* and any future revisions of this rule adopted by the fire code official.

***

901.5.1 Occupancy. It shall be unlawful to occupy any portion of a building or structure until the systems required ((~~fire detection, alarm and suppression systems~~)) by this chapter have been tested and *approved*.

901.5.1 Point of Information

For additional details see Administrative Rule 9.07.07, *Partial / Phased Occupancy, Occupancy during Construction and Temporary Certificates of Occupancy* and any future revisions of this rule adopted by the *fire code official.*

901.6 Inspection, testing and maintenance. Fire detection, alarm and extinguishing systems, mechanical smoke exhaust systems, fire hydrant systems, fire standpipe systems, fire pump systems, private fire service mains, and smoke and heat vents shall be maintained in an operative condition at all times, and shall be replaced or repaired where defective. Nonrequired *fire protection systems* and equipment shall be inspected, tested and maintained or removed when approved by the *fire code official.*

901.6.1 Confidence Test: All *Fire protection systems,* including nonrequired systems, shall be confidence tested in accordance with the Administrative Rule 9.02.09 *Confidence Test Requirements for Life Safety Systems* and any future revisions of this rule adopted by the *fire code official*.

Exceptions:

1. NFPA 13D sprinkler systems
2. Single and multiple station smoke alarms
3. Fire hydrants and fire service mains owned by the City of Seattle

901.6.((~~1~~))2 Standards. *Fire protection systems* shall be inspected, tested and maintained in accordance with the referenced standards *listed* in Table 901.6.((~~1~~))2.

TABLE 901.6.((~~1~~))2
FIRE PROTECTION SYSTEM MAINTENANCE STANDARDS

SYSTEM	STANDARD
Portable fire extinguishers	NFPA 10
Carbon dioxide fire-extinguishing system	NFPA 12
Halon 1301 fire-extinguishing systems	NFPA 12A

Dry-chemical extinguishing systems	NFPA 17
Wet-chemical extinguishing systems	NFPA 17A
Water-based fire protection systems	NFPA 25
Fire alarm systems	NFPA 72
Mechanical smoke exhaust systems	NFPA 204
Smoke and heat vents	NFPA 204
Water-mist systems	NFPA 750
Clean-agent extinguishing systems	NFPA 2001

901.6.((~~2~~))**3 Records.** Records of all system inspections, tests and maintenance required by the referenced standards shall be maintained on the premises for a minimum of three years and shall be copied to the *fire code official* upon request. Additionally, confidence test documentation shall be submitted to the fire code official in accordance with Administrative Rule 9.02.09, *Confidence Test Requirements for Life Safety Systems* and any future revisions of this rule adopted by the *fire code official.*

901.6.((~~2~~))**3.1 Records information.** Initial records shall include the name of the installation contractor, type of components installed, manufacturer of the components, location and number of components installed per floor. Records shall also include the manufacturers' operation and maintenance instruction manuals. Such records shall be maintained on the premises.

901.7 Systems out of service. Where a ((~~required~~)) *fire protection system* is out of service, the procedures detailed in Administrative Rule 9.06.07, *Out-Of-Service Fire and Life Safety Systems* and any future revisions of this rule adopted by the *fire code official* shall be implemented. ((~~the fire department and the *fire code official* shall be notified immediately and, where required by the *fire code official*, the building shall either be evacuated or an *approved* fire watch shall be~~

~~provided for all occupants left unprotected by the shutdown until the *fire protection system* has been returned to service.~~

~~Where utilized, fire watches shall be provided with at least one *approved* means for notification of the fire department and their only duty shall be to perform constant patrols of the protected premises and keep watch for fires.~~))

***

901.11 Cabinets. Cabinets containing fire-fighting equipment, such as standpipes, fire hose, fire extinguishers or fire department valves, shall not be blocked from use or obscured from view.

901.11.1 Cabinet equipment identification. Cabinets shall be identified in an *approved* manner by a permanently attached sign with letters not less than 2 inches (51 mm) high in a color that contrasts with the background color, indicating the equipment contained therein.

Exceptions:

1. Doors not large enough to accommodate a written sign shall be marked with a permanently attached pictogram of the equipment contained therein.
2. Doors that have either an *approved* visual identification clear glass panel or a complete glass door panel.

901.11.2 Locking cabinet doors. Cabinets shall be unlocked.

Exceptions:

1. Visual identification panels of glass or other *approved* transparent frangible material that is easily broken and allows access.
2. *Approved* locking arrangements.

3. Group I-3 occupancies.

***

SECTION 903

AUTOMATIC SPRINKLER SYSTEMS

***

903.2.1.2 Group A-2. An *automatic sprinkler system* shall be provided for Group A-2 occupancies where one of the following conditions exists:

1. The *fire area* exceeds 5,000 square feet (464m2).
2. The *fire area* has an *occupant load* of 100 or more.
3. The *fire area* is located on a floor other than a *level of exit discharge* serving such occupancies.

   Exception: Item 3 above does not apply to fire areas that include space located one floor above the level of exit discharge if the occupant load of the upper floor is less than 50.

***

903.2.1.6 Nightclub. An automatic sprinkler system shall be provided throughout group A-2 *nightclubs* as defined in this code.

***

903.2.3 Group E. An *automatic sprinkler system* shall be provided for Group E occupancies. ((~~as follows:~~

~~1. Throughout all Group E *fire areas* greater than 12,000 square feet (1115 m2) in area.~~

~~2. Throughout every portion of educational buildings below the lowest *level of exit discharge* serving that portion of the building.~~

~~**Exception:** An *automatic sprinkler system* is not required in any area below the lowest *level of exit discharge* serving that area where every classroom throughout the building has at least one exterior *exit* door at ground level.~~))

Exceptions:

1. Portable school classrooms with an *occupant load* of 50 or less calculated in accordance with Table 1004.1.2, provided that the aggregate area of any cluster of portable school classrooms does not exceed 5,000 square feet (1465 m^2); and clusters of portable school classrooms shall be separated as required in Chapter 5 of the *Seattle Building Code*.
2. Group E occupancies with an occupant load of 50 or less calculated in accordance with Table 1004.1.2.

***

903.2.8 Group R. An *automatic sprinkler system* installed in accordance with Section 903.3 shall be provided throughout all buildings with a Group R *fire area*.

[W] Exception: Group R-1 if all of the following conditions apply:

1. The Group R *fire area* is no more than 500 square feet and is used for recreational use only.
2. The Group R *fire area* is on only one story.
3. The Group R *fire area* does not include a basement.

4. The Group R *fire area* is no closer than 30 feet from another structure.

5. Cooking is not allowed within the Group R *fire area*.

6. The Group R *fire area* has an *occupant load* of no more than 8.

7. A hand-held (portable) fire extinguisher is in every Group R *fire area*.

***

903.3.1.1 NFPA 13 sprinkler systems. Where the provisions of this code require that a building or portion thereof be equipped throughout with an *automatic sprinkler system* in accordance with this section, sprinklers shall be installed throughout in accordance with NFPA 13 except as provided in Section 903.3.1.1.1 and Administrative Rule 9.03.09, *Automatic Sprinkler and Standpipe Systems*, and any future revisions of this rule adopted by the *fire code official*.

903.3.1.1.1 Exempt locations. Automatic sprinklers shall not be required in the following rooms or areas where such rooms or areas are protected with an *approved* automatic fire detection system in accordance with Section 907.2 that will respond to visible or invisible particles of combustion. Sprinklers shall not be omitted from any room merely because it is damp, of fire-resistance rated construction or contains electrical equipment.

1. Any room where the application of water, or flame and water, constitutes a serious life or fire hazard, if *approved* by the *fire code official*.
2. Any room or space where sprinklers are considered undesirable because of the nature of the contents, when *approved* by the *fire code official*.

3. ((~~Generator and t~~)) Transformer vaults((~~rooms~~)) separated from the remainder of the building by walls and floor/ceiling or roof/ceiling assemblies having a *fire-resistance rating* of not less than ((~~2~~)) 3hours.

4. Rooms or areas that are of noncombustible construction with wholly noncombustible contents.

~~((5. Fire service access elevator machine rooms and machinery spaces.~~

~~6. Machine rooms and machinery spaces associated with occupant evacuation elevators designed in accordance with Section 3008 of the *International Building Code.*))~~

903.3.1.2 NFPA 13R sprinkler systems. *Automatic sprinkler systems* in Group R occupancies up to and including four stories in height shall be permitted to be installed throughout in accordance with NFPA 13R. NFPA 13R sprinkler systems are not allowed in mixed use residential buildings unless the only other occupancy is parking associated with the residential use or the non-residential use is separated in accordance with the Seattle Building Code to create a separate building.

***

903.3.1.3 NFPA 13D sprinkler systems. *Automatic sprinkler systems* installed in one and two-family *dwellings*, Group R-3 and R-4 congregate living facilities and townhouses, when *approved* by the *fire code official*, shall be permitted to be installed throughout in accordance with NFPA 13D.

***

903.3.3 Obstructed locations. Automatic sprinklers shall be installed ((~~with due regard to obstructions that will delay activation or obstruct the water distribution pattern.~~)) in accordance with NFPA 13 obstruction criteria and the listing requirements of the sprinkler head. Automatic sprinklers shall be installed in or under covered kiosks, displays, booths, concession stands or equipment that exceeds 4 feet (1219 mm) in width and depth. Not less than a 3-foot (914 mm) clearance shall be maintained between automatic sprinklers and the top of piles of *combustible fibers*.

Exception: Kitchen equipment under exhaust hoods protected with a fire-extinguishing system in accordance with Section 904.

***

903.3.5.1 Domestic services. ((~~Where the domestic service can provides the water supply for the *automatic sprinkler system*, the supply shall be~~)) Both NFPA 13R and NFPA 13D sprinkler systems can be supplied by a domestic service in accordance with this section.

***

903.3.5.1.2 ((~~**Residential combination**~~)) **Combined fire/domestic services.** A single combination water supply shall be allowed for all types of sprinkler systems provided that the domestic demand is added to the sprinkler demand as required by NFPA 13R.

903.3.5.1.3 Fire Service A fire service shall be allowed for all types of sprinkler systems.

903.3.5.2 Secondary water supply. An automatic secondary on-site water supply having a capacity providing the lesser of a net volume of 33,000 gallons or a volume that is not less

than the hydraulically calculated sprinkler demand, including the hose stream requirement in NFPA 13, shall be provided for *high-rise buildings* in Seismic Design Category C, D, E or F as determined by the *International Building Code*. An additional fire pump shall not be required for the secondary water supply unless needed to provide the minimum design intake pressure at the suction side of the fire pump supplying the *automatic sprinkler system.* The secondary water supply shall have a duration of not less than 30 minutes as determined by the occupancy hazard classification in accordance with NFPA 13.

Exception: Existing buildings.

***

903.4 Sprinkler system supervision and alarms. All valves controlling the water supply for *automatic sprinkler systems*, pumps, tanks, water levels and temperatures, critical air pressures and water-flow switches on all sprinkler systems shall be electrically supervised by a *listed* fire alarm control unit.

Exceptions:

1. *Automatic sprinkler systems* protecting one- and two family *dwellings* and, if *approved* by the *fire code official*, *townhouses*.
2. Limited area systems serving fewer than 20 sprinklers.
3. *Automatic sprinkler systems* installed in accordance with NFPA 13R where a common supply main is used to supply both domestic water and the *automatic sprinkler system*, and a separate shutoff valve for the *automatic sprinkler system* is not provided.
4. Jockey pump control valves that are sealed or locked in the open position.

5. Control valves to commercial kitchen hoods, paint spray booths or dip tanks that are sealed or locked in the open position.
6. Valves controlling the fuel supply to fire pump engines that are sealed or locked in the open position.
7. Trim valves to pressure switches in dry, preaction and deluge sprinkler systems that are sealed or locked in the open position.

903.4.1 Monitoring. Alarm, supervisory and trouble signals shall be distinctly different and shall be automatically transmitted to an approved central station, remote supervising station or proprietary supervising station as defined in NFPA 72 or, when approved by the fire code official, shall sound an audible signal at a constantly attended location.

Exceptions:

1. ((~~Underground key or hub valves in roadway boxes~~)) Valves provided by the municipality or public utility are not required to be monitored.
2. Backflow prevention device test valves located in limited area sprinkler system supply piping shall be locked in the open position. In occupancies required to be equipped with a fire alarm system, the backflow preventer valves shall be electrically supervised by a tamper switch installed in accordance with NFPA 72 and separately annunciated.

***

SECTION 905

STANDPIPE SYSTEMS

***

905.2 Installation standard. Standpipe systems shall be installed in accordance with this section, ((~~and~~)) NFPA 14, and Administrative Rule 9.03.09, *Automatic Sprinklers and Standpipes* and any future revisions of this rule adopted by the *fire code official*.

905.3 Required installations. Standpipe systems shall be installed where required by Sections 905.3.1 through 905.3.8. Standpipe systems are allowed to be combined with *automatic sprinkler systems*.

Exception: Standpipe systems are not required in ((~~Group R-3 occupancies~~)) one and two family dwellings and townhouses.

***

905.3.3 Covered and open mall buildings. Covered mall and open mall buildings shall be equipped throughout with a Class I standpipe system with ((~~standpipe system where required by Section 905.3.1. Covered mall buildings not required to be equipped with a standpipe system by Section 905.3.1 shall be equipped with Class I hose connections connected to the *automatic sprinkler system* sized to deliver water at 250 gallons per minute (946.4 L/min) at the most hydraulically remote hose connection while concurrently supplying the *automatic sprinkler system* demand. The standpipe system shall be designed not to exceed a 50-pounds-per-square-inch (345 kPa) residual pressure loss with a flow of 250 gallons per minute (946.4 L/min) from the fire department connection to the hydraulically most remote hose connection. H~~)) hose connections ((~~shall be~~)) provided at each of the following locations:

1. Within the mall at the entrance to each *exit* passageway or *corridor*.

2. At each floor-level landing within enclosed *stairways* opening directly on the mall.
3. At exterior public entrances to the mall of a covered mall building.
4. At public entrances at the perimeter line of an open mall building.
5. At other locations as necessary so that the distance to reach all portions of a tenant space does not exceed 200 feet (60 960 mm) from a hose connection.

((~~**905.3.4 Stages.** Stages greater than 1,000 square feet (93 m2) in area shall be equipped with a Class III wet standpipe system with 11/2-inch and 21/2-inch (38 mm and 64 mm) hose connections on each side of the stage.~~

~~**Exception:** Where the building or area is equipped throughout with an *automatic sprinkler system*, a 11/2-inch (38 mm) hose connection shall be installed in accordance with NFPA 13 or in accordance with NFPA 14 for Class II or III standpipes.~~

~~**905.3.4.1 Hose and cabinet.** The 11/2-inch (38 mm) hose connections shall be equipped with sufficient lengths of 11/2-inch (38 mm) hose to provide fire protection for the stage area. Hose connections shall be equipped with an *approved* adjustable fog nozzle and be mounted in a cabinet or on a rack.~~))

905.3.((~~5~~))4 Underground buildings. Underground buildings shall be equipped throughout with a Class I automatic wet or manual wet standpipe system.

905.3.((~~6~~))5 Helistops and heliports. Buildings with a rooftop *helistop* or *heliport* shall be equipped with a Class I or III standpipe system extended to the roof level on which the *helistop* or *heliport* is located in accordance with Section 2007.5.

905.3.((~~7~~))6 Marinas and boatyards. Standpipes in marinas and boatyards shall comply with Chapter 36.

905.3.((~~8~~))7 Rooftop gardens and landscaped roofs. Buildings or structures that have rooftop gardens or landscaped roofs and that are equipped with a standpipe system shall have the standpipe system extended to the roof level on which the rooftop garden or landscaped roof is located.

905.4 Location of Class I standpipe hose connections. Class I standpipe hose connections shall be provided in all of the following locations:

1. In every required *stairway*, a hose connection shall be provided for each floor level above or below grade. Hose connections shall be located at an intermediate floor level landing between floors, or the main floor landing, but must be consistent throughout a building. ((~~unless otherwise *approved* by the *fire code official*.~~))
2. On each side of the wall adjacent to the *exit* opening of a horizontal *exit*.

   Exception: Where floor areas adjacent to a horizontal *exit* are reachable from *exit stairway* hose connections by a 30-foot (9144 mm) hose stream from a nozzle attached to 100 feet (30 480 mm) of hose, a hose connection shall not be required at the horizontal *exit*.
3. In every *exit* passageway, at the entrance from the exit passageway to other areas of a building.

   Exception: Where floor areas adjacent to an exit passageway are reachable from *exit stairway* hose connections by a 30-foot (9144 mm) hose stream from a nozzle attached to

100 feet (30 480 mm) of hose, a hose connection shall not be required at the entrance from the exit passageway to other areas of the building.

4. In covered mall buildings, adjacent to each exterior public entrance to the mall, and adjacent to each entrance from an *exit* passageway or *exit corridor* to the mall. In open mall buildings, adjacent to each public entrance to the mall at the perimeter line and adjacent to each entrance from an *exit passageway* or *exit corridor* to the mall.
5. Where the roof has a slope less than four units vertical in 12 units horizontal (33.3-percent slope), a hose connection shall be located to serve the roof or at the highest landing of a stairway with stair access to the roof provided in accordance with Section 1009.16. Hose connections on a roof shall be at least 10 ft. (3048 mm) from the roof edge, skylight, light well or other opening, unless protected by an *approved* 42-inch-high (1067 mm) guardrail or equivalent.
6. Where the most remote portion of a nonsprinklered floor or story is more than 150 feet (45 720 mm) from a hose connection or the most remote portion of a sprinklered floor, roof, or story is more than 200 feet (60 960 mm) from a hose connection, the *fire code official* is authorized to require that additional hose connections be provided in *approved* locations. Access to the additional hose connections shall be through protected enclosures. The protected enclosure shall be a *corridor* constructed as a *smoke barrier* from the *exit enclosure* to the standpipe connection. Additional hose connections in parking garages and roofs are not required to be accessed through or located in protected enclosures.

***

((~~**905.5.1 Groups A-1 and A-2.** In Group A-1 and A-2 occupancies with *occupant loads* of more than 1,000, hose connections shall be located on each side of any stage, on each side of the rear of the auditorium, on each side of the balcony, and on each tier of dressing rooms.~~))

905.5.((~~**2**~~))**1 Protection.** Fire-resistance-rated protection of risers and laterals of Class II standpipe systems is not required.

905.5.((~~**3**~~))**2 Class II system 1-inch hose.** A minimum 1-inch (25 mm) hose shall be allowed to be used for hose stations in light-hazard occupancies where investigated and *listed* for this service and where *approved* by the *fire code official*.

***

905.9 Valve supervision. Valves controlling water supplies shall be supervised in the open position so that a change in the normal position of the valve will generate a supervisory signal at the supervising station required by Section 903.4. Where a fire alarm system is provided, a signal shall also be transmitted to the control unit.

Exceptions:

1. Valves ((~~to underground key or hub valves in roadway boxes~~)) provided by the municipality or public utility do not require supervision.
2. Valves locked in the normal position and inspected as provided in this code in buildings not equipped with a fire alarm system and/or not provided with monitoring by a central station service.

***

SECTION 907

FIRE ALARM AND DETECTION SYSTEMS

907.1 General. This section covers the application, installation, performance and maintenance of fire alarm systems and their components in new and existing buildings and structures

The requirements of Section 907.2 are applicable to new buildings and structures. The requirements of Section 907.3 are applicable to existing buildings and structures.

Buildings required by this section to be provided with a fire alarm system shall be provided with a single fire alarm system. For the purposes of-this section, fire walls not located on a property line shall not constitute a separate building.

Exception: A single system is not required in existing buildings that are being increased in size and the existing fire alarm system is unable to expand into the new space. In those cases multiple systems shall be arranged as described below for nonrequired fire alarm systems.

Buildings not required by this section to be provided with a fire alarm system may be provided with multiple partial fire alarm systems if:

1. The systems are connected so that all systems simultaneously activate alarm notification appliances upon a signal from any of the fire alarm systems in the building, and
2. The location of each system's annunciator panel (or main panel) is also provided with annunciator panels with reset capability for every other system in the building.

***

((907.2.7.1 Occupant notification. ~~During times that the building is occupied, the initiation of a signal from a manual fire alarm box or from a water flow switch shall not be required to activate the alarm notification appliances when an alarm signal is activated at a~~

~~constantly attended location from which evacuation instructions shall be initiated over an emergency voice/alarm communication system installed in accordance with Section 907.6.2.2.~~))

***

907.2.8.2 Automatic ((~~smoke~~)) detection system. An automatic smoke detection system that activates the occupant notification system in accordance with Section 907.6 shall be installed throughout all interior *corridors* serving *sleeping units*. Automatic heat detectors shall be provided in any unsprinklered interior areas outside guestrooms other than attics and crawl spaces.

***

907.2.9.1 Manual fire alarm system. A manual fire alarm system that activates the occupant notification system in accordance with Section 907.6 shall be installed in Group R-2 occupancies where:

1. Any *dwelling unit* or *sleeping unit* is located three or more stories above the lowest *level of exit discharge*;
2. Any *dwelling unit* or *sleeping unit* is located more than one story below the highest *level of exit discharge* of *exit*s serving the *dwelling unit* or *sleeping unit*; or
3. The building contains more than 16 *dwelling units* or *sleeping units*.

[W] 4. The building contains a boarding home licensed by the state of Washington.

Exceptions:

1. A fire alarm system is not required in buildings not more than two stories in height where all *dwelling units* or *sleeping units* and contiguous attic and crawl spaces are separated from each other and public or common areas by at least 1-hour *fire partitions* and each *dwelling unit* or *sleeping unit* has an *exit* directly to a *public way*, *exit court* or yard.
2. Manual fire alarm boxes are not required where the building is equipped throughout with an *automatic sprinkler system* installed in accordance with Section 903.3.1.1 or 903.3.1.2 and the occupant notification appliances will automatically activate throughout the notification zones upon a sprinkler water flow.
3. A fire alarm system is not required in buildings that do not have interior *corridors* serving *dwelling units* and are protected by an *approved automatic sprinkler system* installed in accordance with Section 903.3.1.1 or 903.3.1.2, provided that *dwelling units* either have a *means of egress* door opening directly to an exterior *exit access* that leads directly to the *exits* or are served by open-ended *corridors* designed in accordance with Section 1026.6, Exception 4.
4. A fire alarm system is not required in townhouses if approved by the *fire code official.*

[W] 5. In boarding homes licensed by the state of Washington, manual fire alarm boxes in resident sleeping areas are not required at exits if located at all constantly attended staff locations, if such staff locations are visible, continuously accessible,

located on each floor, and positioned so no portion of the story exceeds a horizontal travel distance of 200 feet to a manual fire alarm box.

***

907.2.9.4 Automatic heat detection. An automatic heat detection system shall be installed throughout all unsprinklered interior areas outside dwelling units other than attics and crawl spaces.

[W] ((~~**907.2.10 Group R-4.** Fire alarm systems and smoke alarms shall be installed in Group R-4 occupancies as required in Sections 907.2.10.1 through 907.2.10.3.~~

~~**907.2.10.1 Manual fire alarm system.** A manual fire alarm system that activates the occupant notification system in accordance with Section 907.6 shall be installed in Group R-4 occupancies.~~

~~**Exceptions:**~~

~~1. A manual fire alarm system is not required in buildings not more than two stories in height where all individual *sleeping units* and contiguous attic and crawl spaces to those units are separated from each other and public or common areas by at least 1-hour *fire partitions* and each individual *sleeping unit* has an *exit* directly to a *public way*, *exit court* or yard.~~

~~2. Manual fire alarm boxes are not required throughout the building when the following conditions are met:~~

~~2.1. The building is equipped throughout with an *automatic sprinkler system* installed in accordance with Section 903.3.1.1 or 903.3.1.2;~~

~~2.2. The notification appliances will activate upon sprinkler water flow; and~~

~~2.3. At least one manual fire alarm box is installed at an *approved* location.~~

~~3. Manual fire alarm boxes in resident or patient sleeping areas shall not be required at *exits* where located at all nurses' control stations or other constantly attended staff locations, provided such stations are visible and continuously accessible and that travel distances required in Section 907.5.2.1 are not exceeded.~~

~~**907.2.10.2 Automatic smoke detection system.** An automatic smoke detection system that activates the occupant notification system in accordance with Section 907.6 shall be installed in *corridors*, waiting areas open to *corridors* and *habitable spaces* other than *sleeping units* and kitchens.~~

~~**Exceptions:**~~

~~1. Smoke detection in *habitable spaces* is not required where the facility is equipped throughout with an *automatic sprinkler system* installed in accordance with Section 903.3.1.1.~~

~~2. An automatic smoke detection system is not required in buildings that do not have interior *corridors* serving *sleeping units* and where each *sleeping unit* has a *means of egress* door opening directly to an *exit* or to an exterior *exit access* that leads directly to an exit.~~

~~**907.2.10.3 Smoke alarms.** Single- and multiple-station smoke alarms shall be installed in accordance with Section 907.2.11.~~))

***

907.2.11.2 Groups R-2, R-3, ((~~R-4~~)) and I-1. Single or multiple-station smoke alarms shall be installed and maintained in Groups R-2, R-3,((~~R-4~~)) and I-1 regardless of *occupant load* at all of the following locations:

1. On the ceiling or wall outside of each separate sleeping area in the immediate vicinity of bedrooms.
2. In each room used for sleeping purposes.

   Exception: Single- or multiple-station smoke alarms in Group I-1 shall not be required where smoke detectors are provided in the sleeping rooms as part of an automatic smoke detection system.
3. In each story within a *dwelling unit*, including *basements* but not including crawl spaces and uninhabitable attics. In *dwellings* or *dwelling units* with split levels and without an intervening door between the adjacent levels, a smoke alarm installed on the upper level shall suffice for the adjacent lower level provided that the lower level is less than one full story below the upper level.

907.2.11.3 Interconnection. Where more than one smoke alarm is required to be installed within an individual *dwelling unit* or *sleeping unit* in Group R-1, R-2((~~,~~)) <u>or</u> ((~~or R-4~~)) R-3, the smoke alarms shall be interconnected in such a manner that the activation of one alarm will activate all of the alarms in the individual unit. The alarm shall be clearly audible in all bedrooms over background noise levels with all intervening doors closed.

***

907.2.13 High-rise buildings. Buildings with a floor used for human occupancy located more than 75 feet (22 860 mm) above the lowest level of fire department vehicle access shall be provided with an automatic smoke detection system in accordance with Section 907.2.13.1, a fire department communication system in accordance with Section 907.2.13.2 and an emergency voice/alarm communication system in accordance with Section 907.6.2.2.

Exceptions:

1. Airport traffic control towers in accordance with Section 907.2.22 and Section 412 of the *International Building Code*.
2. Open parking garages in accordance with Section 406.3 of the *International Building Code*.
3. Buildings with an occupancy in Group A-5 in accordance with Section 303.1 of the *International Building Code.*
4. Low-hazard special occupancies in accordance with Section 503.1.1 of the *International Building Code.*

((~~5. Buildings with an occupancy in Group H-1, H-2 or H-3 in accordance with Section 415 of the *International Building Code*.~~))

((~~6~~)) 5. In Group I-1 and I-2 occupancies, the alarm shall sound at a constantly attended location and general occupant notification shall be broadcast by the emergency voice/alarm communication system.

***

907.2.13.2 Fire department communication system. Where a wired communication system is *approved* in lieu of a radio coverage system in accordance with Section 510, the wired fire department communication system shall be designed and installed in accordance with NFPA 72 and shall operate between a *fire command center* complying with Section 508, elevators, elevator lobbies, emergency and standby power rooms, fire pump rooms, areas of refuge and inside enclosed *exit stairways*. The fire department communication device shall be provided at each floor level within the enclosed *exit stairway*. Eight portable handsets for the communication system shall be provided in the *fire command center*.

***

907.3.1 Duct smoke detectors. Smoke detectors installed in ducts shall be *listed* for the air velocity, temperature and humidity present in the duct. Duct smoke detectors shall be connected to the building's fire alarm control unit when a fire alarm system is required by Section 907.2. Activation of a duct smoke detector shall initiate a visible and audible supervisory signal at a constantly attended location and shall perform the intended fire safety function in accordance with this code and the *International Mechanical Code*. Duct smoke detectors shall not be used as a substitute for required open area detection and shall not activate the occupant notification system.

Exceptions:

1. The supervisory signal at a constantly attended location is not required where duct smoke detectors activate the building's alarm notification appliances.

2. In occupancies not required to be equipped with a fire alarm system, actuation of a smoke detector shall activate a visible and an audible signal in an *approved* location. Smoke detector trouble conditions shall activate a visible or audible signal in an *approved* location and shall be identified as air duct detector trouble.

***

907.3.3 Elevator emergency operation. Automatic fire detectors installed for elevator emergency operation shall be installed in accordance with the provisions of ((~~ASME A17.1 and NFPA 72.~~)) Administrative Rule 9.08.05, *Sprinkler Systems and Fire Alarms for Elevator Machinery Rooms, Hoist Ways and Pits* and any future revisions of this rule adopted by the *fire code official.*

***

907.5.2.1.1 Average sound pressure. The audible alarm notification appliances shall provide a sound pressure level of 15 decibels (dBA) above the average ambient sound level or 5 dBA above the maximum sound level having a duration of at least 60 seconds, whichever is greater, in every occupiable space within the building.

Exceptions:

1. Private mode signaling in accordance with NFPA 72 is allowed in areas of Group I-2 and I -3 occupancies if occupants are not expected to self evacuate.
2. Alarm systems installed in selected parts of a building are required to meet sound pressure requirements within the selected area of the building only.

***

907.5.2.3 Visible alarms. Visible alarm notification appliances shall be provided in accordance with Sections 907.5.2.3.1 through 907.5.2.3.4, and Administrative Rule 9.09.07, *Visible Alarm Notification Devices* and any future revisions of this rule adopted by the *fire code official.*

Exceptions:

1. Visible alarm notification appliances are not required in *alterations*, except where an existing fire alarm system is upgraded or replaced, or a new fire alarm system is installed.
2. Visible alarm notification appliances shall not be required in *exits* as defined in Section 1002.1.
3. Visible alarm notification appliances shall not be required in elevator cars.

***

907.6.3.1 ((~~Zoning indicator~~)) Annunciator panel. ((~~A zoning indicator panel and the associated controls shall be provided in an *approved* location.~~)) All fire alarm systems in buildings without a fire command center shall be provided with an annunciator panel (or the main fire alarm control panel) located inside the building at the main building entrance. The visual zone indication on the annunciator panel shall lock in until the system is reset and shall not be canceled by the operation of an audible alarm-silencing switch.

***

907.6.5 Monitoring. Fire alarm systems required by this chapter or by the *International Building Code* shall be monitored by an *approved* supervising station in accordance with NFPA 72.

Exception: Monitoring by a supervising station is not required for:

1. Single- and multiple-station smoke alarms required by Section 907.2.11.
2. Smoke detectors in Group I-3 occupancies.
3. *Automatic sprinkler systems* in one- and two-family dwellings and *townhouses*.

***

907.7 Acceptance tests and completion. Upon completion of the installation, and after the electrical inspector has signed-off the installation, the fire alarm system and all fire alarm components shall be tested in accordance with NFPA 72.

***

907.10 Resetting fire alarm equipment. Fire alarm equipment shall be reset upon activation only by fire department personnel.

Exception: If approved by the *fire code official*.

***

SECTION 908

EMERGENCY ALARM SYSTEMS

***

908.7 Carbon monoxide alarms. Group I or R occupancies located in a building containing a fuel-burning appliance or in a building which has an attached garage shall be equipped with single-station carbon monoxide alarms. The carbon monoxide alarms shall be *listed* as

complying with UL 2034 and be installed and maintained in accordance with NFPA 720 and the manufacturer's instructions. An open parking garage, as defined in Chapter 2 of the *International Building Code*, or an enclosed parking garage ventilated in accordance with Section 404 of the *International Mechanical Code* shall not be considered an attached garage.

[W] Exceptions:

1. For other than R-2 occupancies, where the building does not contain a fuel- burning appliance, a fuel burning fireplace, or an attached garage.

2. *Sleeping units* or *dwelling units* in I and R-1 occupancies and R-2 college dormitories, hotels, and DSHS licensed boarding home and residential treatment facility occupancies which do not themselves contain a fuel-burning appliance, or fuel-burning fireplace, or have an attached garage, ((~~but which are located in a building with a fuel-burning appliance or an attached garage,~~)) need not be equipped with single-station carbon monoxide alarms provided that:

   2.1 The *sleeping unit* or *dwelling unit* is not adjacent to ((~~located more than one story above or below~~)) any room ((~~story~~)) which contains a fuel-burning appliance, fuel-burning fireplace, or an attached garage; and

   2.2 The *sleeping unit* or *dwelling unit* is not connected by duct work or ventilation shafts with a supply or return register in the same room to any room containing a fuel-burning appliance, fuel-burning fireplace, or ((~~to~~)) an attached garage; and

   2.3 The building is equipped with a common area carbon monoxide detection ((~~alarm~~)) system.

***

SECTION 909

SMOKE CONTROL SYSTEM

***

909.2 General design requirements. Buildings, structures, or parts thereof required by the *International Building Code* or this code to have a smoke control system or systems shall have such systems designed in accordance with the applicable requirements of Section 909 and the generally accepted and well-established principles of engineering relevant to the design. The *construction documents* shall include sufficient information and detail to describe adequately the elements of the design necessary for the proper implementation of the smoke control systems. These documents shall be accompanied with sufficient information and analysis to demonstrate compliance with these provisions.

Point of Information

See Seattle Building Code for details of shaft pressurization requirements

***

909.11 Power systems. The smoke control system shall be supplied with two sources of power. Primary power shall be from the normal building power systems. Secondary power shall be from an *approved* ((~~standby source~~)) emergency power system complying with Section 604 and NFPA70. The ((~~standby power source~~)) emergency power system and its transfer switches shall be in a room separate from the normal power transformers and switch gears and ventilated

directly to and from the exterior. The room shall be enclosed with not less than 1-hour *fire barriers* constructed in accordance with Section 707 of the *International Building Code* or horizontal assemblies constructed in accordance with Section 712 of the *International Building Code*, or both.

Exceptions:

1. Where located within a sprinklered parking garage of Type I or II construction, emergency power and legally required standby power systems with fixed fuel quantities meeting the limits of Section 603.3 of the *International Fire Code*, and their transfer switches, are not required to be in a separate room. Other occupancies located in the story where the system is located shall be separated from the system by fire barriers with a minimum 1 hour fire-resistance rating.
2. Combustion and radiator intake air are permitted to be transferred from the adjacent garage. Radiator discharge air is permitted to be transferred to the adjacent garage. Radiator ventilation intake and discharge air locations shall be separated to maintain the radiator ventilation intake air temperature below the maximum temperature allowed to meet the emergency and legally required standby power system loads.

***

909.11.2 Wiring. In addition to meeting requirements of the *Seattle Electrical Code*, all wiring regardless of voltage, shall have fire-resistance-rated protection of at least two hours or as required in rules promulgated by the building official.

Exception: Subject to the approval of the building official, fire-resistance rating is not required for wiring located in a parking garage.

***

909.12 Detection and control systems. Fire detection systems providing control input or output signals to mechanical smoke control systems or elements thereof shall comply with the requirements of Section 907. Such systems shall be equipped with a control unit complying with UL 864 and *listed* as smoke control equipment.

Control systems for mechanical smoke control systems shall include provisions for verification. Verification shall include positive confirmation of actuation, testing, manual override, the presence of power downstream of all disconnects and, through a preprogrammed weekly test sequence, report abnormal conditions audibly, visually and by printed report.

Exception: Weekly testing is not required for stairway and hoistway pressurization systems.

909.12.1 Wiring. See section 909.11.2. **((**~~In addition to meeting requirements of NFPA 70, all wiring, regardless of voltage, shall be fully enclosed within continuous raceways~~.))

909.12.2 Activation. Smoke control systems shall be activated in accordance with this section.

909.12.2.1 Pressurization, airflow or exhaust method. Mechanical smoke control systems using the pressurization, airflow or exhaust method shall have completely automatic control.

909.12.2.2 Passive method. Passive smoke control systems actuated by *approved* spot-type detectors *listed* for releasing service shall be permitted.

909.12.3 Automatic control. Where completely automatic control is required or used, the automatic-control sequences shall be initiated from an appropriately zoned *automatic sprinkler system* complying with Section the fire department, and any smoke detectors ((~~required by the engineering analysis~~)).

***

909.16 Fire-fighter's smoke control panel. A fire-fighter's smoke control panel for fire department emergency response purposes only shall be provided and shall include manual control or override of automatic control for mechanical smoke control systems. The panel shall be located in a *fire command center* complying with Section 508 in high-rise buildings or buildings with smoke-protected assembly seating. In all other buildings, the fire-fighter's smoke control panel shall be installed in an *approved* location adjacent to the fire alarm control panel. The fire-fighter's smoke control panel shall comply with Sections 909.16.1 through 909.16.3.

The smoke control panel for high rise buildings shall include a visual depiction of the building showing typical floor plan(s) with locations of exit enclosures and elevator shafts. The panel shall also include section views of the building to show the extent of travel for each exit enclosure and elevator. Exit enclosures and elevator shafts shall be labeled on the plan section views to match the labeling used in the building itself.

909.16.1 Smoke control systems. Fans within the building shall be shown on the fire-fighter's control panel. Fan control switches shall be located on the panel in the vicinity of the location where the shaft supplied by each fan is depicted. A clear indication of the direction of airflow and the relationship of components shall be displayed. Status indicators shall be

provided for all smoke control ((~~equipment~~)) fans, annunciated by fan and zone and by pilot-lamp-type indicators as follows:

1. Fans ((~~, dampers and other operating equipment in their normal status~~)) in a ready/non-operating status—WHITE.
2. Fans ((~~, dampers and other operating equipment~~)) in their off or closed status—RED.
3. Fans ((~~, dampers and other operating equipment in their on or open status~~)) in operation—GREEN.
4. Fans ((~~, dampers and other operating equipment in a fault status~~)) in a fault condition — YELLOW/AMBER.

909.16.2 Smoke control panel. The fire-fighter's control panel shall provide control capability over the complete smoke-control system equipment within the building as follows:

1. ON-AUTO-OFF control over each shaft pressurization fan. ((~~individual piece of operating smoke control equipment that can also be controlled from other sources within the building. This includes *stairway* pressurization fans; smoke exhaust fans; supply, return and exhaust fans; elevator shaft fans; and other operating equipment used or intended for smoke control purposes.~~))
2. AUTO-OFF-POSITIVE PRESSURE-NEGATIVE PRESSURE control of each smoke control zone designed with such features. Individual control of each damper and fan used to achieve the positive or negative pressure condition is not required. ((~~OPEN-AUTO-CLOSE control over individual dampers relating to smoke control and that are also controlled from other sources within the building.~~))

3. AUTO-EXHAUST-OFF control of each smoke exhaust zone using the exhaust method of smoke control.((~~ON-OFF or OPEN-CLOSE control over smoke control and other critical equipment associated with a fire or smoke emergency and that can only be controlled from the fire-fighter's control panel.~~))

Exception((~~s~~)**:**

1. Complex exhaust systems using multiple exhaust fans and/or zones may require individual fan control if required by the *fire code official*.((~~Complex systems, where *approved*, where the controls and indicators are combined to control and indicate all elements of a single smoke zone as a unit.~~

~~2. Complex systems, where *approved*, where the control is accomplished by computer interface using *approved*, plain English commands.~~))

***

909.18.8 Special inspections for smoke control. Smoke control systems shall be tested by a special inspector for compliance with the *approved* design.

909.18.8.1 Scope of testing. Special inspections shall be conducted ((~~in accordance with the following:~~

~~1. During erection of ductwork and prior to concealment for the purposes of leakage testing and recording of device location~~.

~~2~~)). Prior to occupancy and after sufficient completion for the purposes of pressure-difference testing, flow measurements, and detection and control verification.

***

SECTION 914

FIRE PROTECTION BASED ON SPECIAL DETAILED REQUIREMENTS OF USE AND OCCUPANCY

***

914.3 High-rise buildings. *High-rise buildings* shall comply with Sections 914.3.1 through 914.3.5.

914.3.1 Automatic sprinkler system. Buildings and structures shall be equipped throughout with an *automatic sprinkler system* in accordance with Section 903.3.1.1 and a secondary water supply where required by Section 903.3.5.2.

Exception: An *automatic sprinkler system* shall not be required in spaces or areas of((~~:~~))

((~~1. Open parking garages in accordance with Section 406.5 of the *International Building Code*.~~))

((~~2. T~~)) telecommunications equipment buildings used exclusively for telecommunications equipment, associated electrical power distribution equipment, batteries and standby engines, provided that those spaces or areas are equipped throughout with an automatic fire detection system in accordance with Section 907.2 and are separated from the remainder of the building by not less than 1-hour *fire barriers* constructed in accordance with Section 707 of the *International Building Code* or not less than 2-hour *horizontal assemblies* constructed in accordance with Section 711 of the *International Building Code*, or both.

((~~**914.3.1.1 Number of sprinkler risers and system design.** Each sprinkler system zone in buildings that are more than 420 feet (128 m) in height shall be supplied by a minimum of two risers. Each riser shall supply sprinklers on alternate floors. If more than two risers are provided for a zone, sprinklers on adjacent floors shall not be supplied from the same riser.~~))

914.3.1.1 Automatic sprinkler system design. High-rise building sprinkler systems shall be combination standpipe/sprinkler systems incorporating the following features:

1. Each floor sprinkler system shall be connected between standpipe risers.
2. Shut-off valves, water-flow devices and check valves (or pressure reducing valves) shall be provided on each floor at the sprinkler system connection to each standpipe.
3. Two four-way fire department connections serving the combination system shall be provided on separate streets well separated from each other.
4. At least one of the fire department connections shall be connected to the riser above a riser isolation valve.
5. When a mid-level fire pump is required to meet pressure requirements, two pumps with the same rating shall be installed.
6. Dry-pipe sprinkler systems serving parking garages may use a separate two-way fire department connection. The dry-pipe sprinkler system shall be supplied by the on-site water tank.
7. The standpipe risers in each required stair shall be a minimum pipe size of 6 inches (152 mm).

8. Two 2½ -inch (64 mm) hose connections shall be provided on every floor level landing in every required stairway. If pressure reducing valves (PRV) are required, each hose connection shall be provided with its own PRV.
9. The system shall be designed to provide a minimum flow of 300 gpm (19 L/s) at a minimum pressure of 150 psi (1034 kPa) [maximum 205 psi (1379 kPa)] at each standpipe connection in addition to the flow and pressure requirements contained in NFPA 14.
10. When a mid-level pump is required to meet pressure requirements, two mid-level pumps with the same rating shall be provided

914.3.1.1.1 Riser location. Sprinkler risers shall be placed in interior *exit stairways* and ramps that are remotely located in accordance with Section 1015.2.

((~~**914.3.1.2 Water supply to required fire pumps.** Required fire pumps shall be supplied by connections to a minimum of two water mains located in different streets. Separate supply piping shall be provided between each connection to the water main and the pumps. Each connection and the supply piping between the connection and the pumps shall be sized to supply the flow and pressure required for the pumps to operate.~~

~~**Exception:** Two connections to the same main shall be permitted provided the main is valved such that an interruption can be isolated so that the water supply will continue without interruption through at least one of the connections.~~))

***

[W] SECTION 915

ALERTING SYSTEMS

[W] 915.1 General. An approved *alerting system* in accordance with Sections 915.2 through 915.6 shall be provided in all Group E occupancies.

Exception: Approved *alerting systems* in existing buildings, structures or occupancies.

[W] 915.2 Power source. *Alerting systems* shall be provided with power supplies in accordance with Section 4.4.1 of NFPA 72 and circuit disconnecting means identified as "EMERGENCY ALERTING SYSTEM."

Exception: Systems that do not require electrical power to operate.

[W] 915.3 Duration of operation. The *alerting system* shall be capable of operating under nonalarm condition (quiescent load) for a minimum of 24 hours and then shall be capable of operating during an emergency condition for a period of 15 minutes at maximum connected load.

[W] 915.4 Combination system. *Alerting system* components and equipment shall be allowed to be used for other purposes.

[W] 915.4.1 System priority. The *alerting system* use shall take precedence over any other use.

[W] 915.4.2 Fire alarm system. Fire alarm systems sharing components and equipment with *alerting systems* shall be in accordance with Section 6.8.4 of NFPA 72.

[W] 915.4.2.1 Signal priority. Recorded or live *alert signals* generated by an *alerting system* that shares components with a fire alarm system shall, when actuated, take priority over fire alarm messages and signals.

[W] 915.4.2.2 Temporary deactivation. Should the fire alarm system be in the alarm mode when such an *alerting system* is actuated, it shall temporarily cause deactivation of all fire alarm-initiated audible messages or signals during the time period required to transmit the *alert signal*.

[W] 915.4.2.3 Supervisory signal. Deactivation of fire alarm audible and visual notification signals shall cause a supervisory signal for each notification zone affected in the fire alarm system.

915.5 Audibility. Audible characteristics of the *alert signal* shall be in accordance with Section 7.4.1 of NFPA 72 throughout the area served by the *alerting system*.

Exception: Areas served by approved visual or textual notification, if the visible notification appliances are not also used as a fire alarm signal.

[W] 915.6 Visibility. Visible and textual notification appliances are permitted in addition to *alert signal* audibility.

***

Section 11. Chapter 10 of the 2012 International Fire Code is amended as follows:

CHAPTER 10
MEANS OF EGRESS

***

SECTION 1003

GENERAL MEANS OF EGRESS

***

1003.2 Ceiling height. The *means of egress* shall have a ceiling height of not less than 7 feet 6 inches (2286 mm).

Exceptions:

1. ((~~Sloped ceilings~~)) Ceilings in accordance with Section 1208.2.

((~~2. Ceilings of *dwelling units* and *sleeping units* within residential occupancies in accordance with Section 1208.2.~~))

((~~3~~))2. Allowable projections in accordance with Section 1003.3.

((~~4~~))3. *Stair* headroom in accordance with Section 1009.5.

((~~5~~))4. Door height in accordance with Section 1008.1.1.

((~~6~~))5. *Ramp* headroom in accordance with Section 1010.6.2.

((~~7~~))6. The clear height of floor levels in vehicular and pedestrian traffic areas in parking garages in accordance with Section 406.4.1.

((~~8~~))7. Areas above and below *mezzanine* floors in accordance with Section 505.2.

***

1003.5 Elevation change. Where changes in elevation of less than 12 inches (305 mm) exist in the *means of egress*, sloped surfaces shall be used. Where the slope is greater than one unit vertical in 20 units horizontal (5-percent slope), *ramps* complying with Section 1010 shall be used. Where the difference in elevation is 6 inches (152 mm) or less, the *ramp* shall be equipped with either *handrails* or floor finish materials that contrast with adjacent floor finish materials.

Exceptions:

1. A single step with a maximum riser height of 7 inches (178 mm) is permitted for buildings with occupancies in Groups F, H, R-2, R-3, S and U at exterior doors not required to be *accessible* by Chapter 11.

2. A *stair* with a single riser or with two risers and a tread is permitted at locations not required to be *accessible* by Chapter 11 and not within a stairway with two or more flights of stairs, provided that the risers and treads comply with Section 1009.7, the minimum depth of the tread is 13 inches (330 mm) and at least one *handrail* complying with Section 1012 is provided within 30 inches (762 mm) of the centerline of the normal path of egress travel on the *stair*.
3. A step is permitted in *aisles* serving seating that has a difference in elevation less than 12 inches (305 mm) at locations not required to be *accessible* by Chapter 11, provided that the risers and treads comply with Section 1028.11 and the *aisle* is provided with a *handrail* complying with Section 1028.13.

Throughout a story in a Group I-2 occupancy, any change in elevation in portions of the *means of egress* that serve nonambulatory persons shall be by means of a *ramp* or sloped walkway.

***

SECTION 1004

OCCUPANT LOAD

1004.1 Design occupant load. In determining *means of egress* requirements, the number of occupants for whom *means of egress* facilities shall be provided shall be determined in accordance with this section.

1004.1.1 Cumulative occupant loads. Where the path of egress travel includes intervening rooms, areas or spaces, cumulative *occupant loads* shall be determined in accordance with this section.

1004.1.1.1 Intervening spaces. Where occupants egress from one room, area or space through another, the design *occupant load* shall be based on the cumulative *occupant loads* of all rooms, areas or spaces to that point along the path of egress travel.

1004.1.1.2 Adjacent levels. The portion of the *occupant load* of a *mezzanine* or story with egress through a room, area or space on an adjacent level shall be added to the *occupant load* of that room, area or space.

1004.1.2 Areas without fixed seating. The number of occupants shall be computed at the rate of one occupant per unit of area as prescribed in Table 1004.1.2. For areas without *fixed seating*, the occupant load shall not be less than that number determined by dividing the floor area under consideration by the *occupant load* factor assigned to the function of the space as set forth in Table 1004.1.2. Where an intended function is not listed in Table 1004.1.2, the *building official* shall establish a function based on a listed function that most nearly resembles the intended function.

Exception: Where *approved* by the *building official*, the actual number of occupants for whom each occupied space, floor or building is designed, although less than those determined by calculation, shall be permitted to be used in the determination of the design *occupant load*.

TABLE 1004.1.2
MAXIMUM FLOOR AREA ALLOWANCES PER OCCUPANT

FUNCTION OF SPACE	OCCUPANT LOAD FACTOR[a]
Accessory storage areas, mechanical equipment room[1]	300 gross
Agricultural building	300 gross
Aircraft hangars	500 gross
Airport terminal	
Baggage claim	20 gross
Baggage handling	300 gross
Concourse	100 gross
Waiting areas	15 gross
Assembly	
Gaming floors (keno, slots, etc.)	11 gross
Exhibit gallery and museum	30 net
Assembly with fixed seats	See Section 1004.4
Assembly without fixed seats	
Concentrated (chairs only–not fixed)	7 net
Standing space	5 net
Unconcentrated (tables and chairs)	15 net
Bowling centers, allow 5 persons for each lane including 15 feet of runway, and for additional areas	7 net
Business areas	
Without sprinkler protection	100 gross
With sprinkler protection	130 gross
Commercial laboratories	100 gross
Courtrooms–other than fixed seating areas	40 net
Day care	35 net
Dormitories	50 gross
Educational	
Classroom area	20 net
Shops, laboratories and other vocational room areas	50 net
Exercise rooms	50 gross
Group H-5 Fabrication and manufacturing areas	200 gross
Industrial areas	100 gross
Institutional areas	
Inpatient treatment areas	240 gross
Outpatient areas	100 gross
Sleeping areas	120 gross
Kitchens, commercial	200 gross

Library	
Reading rooms	50 net
Stack area	100 gross
Mall buildings–covered and open	See Section 402.8.2
Mercantile	
Areas on other floors	60 gross
Basement and grade floor areas	30 gross
Storage, stock, shipping areas	300 gross
Parking garages	200 gross
Residential	200 gross
Skating rinks, swimming pools	
Rink and pool	50 gross
Decks	15 gross
Stages and platforms	15 net
Warehouses	500 gross

For SI: 1 square foot = 0.0929 m^2.
a. Floor area in square feet per occupant.
1. For electrical equipment areas, see also Sections 110.26 and 110.32 through 110-34 of the *Seattle Electrical Code*.

***

SECTION 1005

MEANS OF EGRESS SIZING

***

1005.2 Minimum width based on component. The minimum width, in inches (mm), of any *means of egress* components shall not be less than that specified for such component, elsewhere in this code. The width at any point in the path of egress travel shall not be less than the width required for doors in Section 1008.

Exceptions:

1. Aisles and aisle accessways complying with Section 1017.

2. Corridors complying with Section 1018.2.

3. Stage stairways and catwalks complying with Section 410.6.

***

SECTION 1006

MEANS OF EGRESS ILLUMINATION

***

1006.2 Illumination level. Illumination shall be provided at every point in ((~~T~~))the *means of egress*. The illumination level shall not be less than 1 footcandle (11 lux) at the walking surface. Luminaires shall be installed whenever exit signs are required as specified in Section 1011.

Exception: For auditoriums, theaters, concert or opera halls and similar assembly occupancies, the illumination at the walking surface is permitted to be reduced during performances to not less than 0.2 footcandle (2.15 lux), provided that the required illumination is automatically restored upon activation of a premises' fire alarm system where such system is provided.

Code Alternate CA1006.2: Compliance with the following paragraphs will be deemed to satisfy the requirement for means of egress illumination at every point in the means of egress. Means of egress illumination systems that comply with this Code Alternate shall also comply with Section 1006.3

1. **Location and fixture placement**. Means of egress illumination shall be located in stairways, corridors, halls, passenger elevator cars, lobbies, rooms with an occupant load of 100 or more, and other areas required to provide safe egress from the premises and immediately outside of the building exit when required by the building official. Fixtures shall be installed to not less than the following schedule:

1.1 Interior and exterior stairways and landings and outside building exit	At least one per landing
1.2 Corridors and halls and designated means of egress paths in parking garages	At least one for each 40 lineal feet
1.3 Lobbies, vestibules, foyers, elevator cars and other similar areas as required	At least one for each 250 square feet
1.4 Warehouses	See Item 2 below.

These fixtures are permitted to be included in the watts per square foot calculation for means of egress illumination.

2. **Amount of Illumination**. Where means of egress illumination is required, illumination shall be provided at the rate of 0.1 watt of fluorescent illumination per square foot of area. Installations using incandescent lamps shall have a minimum wattage of at least 3 times the fluorescent requirements. Use of other light sources is subject to the approval of the building official.

Exceptions:

1. In warehouses, the allowable minimum illumination is permitted to be 0.1 watt per square foot (0.03 watts for fluorescent) provided fixtures are placed either:

   1.1 Where means of egress pathways are not designated, fixtures shall be placed to cover an area not larger than 1,600 square feet, or

   1.2 Where means of egress pathways are designated, fixtures shall be placed at least one for every 40 lineal feet.

2. In theaters, auditoriums or other places of assembly where motion pictures or other projections are made by means of directed light, the minimum allowable illumination is permitted to be reduced to 0.05 watts per square foot of floor area (0.02 watts for fluorescent). The higher level of required illumination shall be automatically restored upon activation of a premises fire alarm system where such system is provided.
3. In Groups B, F-1, M and S-1 occupancies, when approved by the building official, the minimum allowable illumination is permitted to be reduced to 0.05 watts per square foot (0.02 watts for fluorescent) of floor area.
4. In Group B occupancies and open parking garages, when approved by the building official, the illumination is permitted to be eliminated when within 50 feet of a window wall or open side and where light is not totally obscured.

Means of egress illumination fixtures shall be spaced and designed to give adequate distribution of light for safe egress and so that the failure of any individual lighting element, such as the burning out of a light bulb, will not leave any space in total darkness. Illumination from battery operated fixtures shall provide the same level of illumination required for hard-wired fixtures.

1006.3 Power supply ((~~Emergency power~~)) for illumination. The power supply for *means of egress* illumination shall normally be provided by the premises' electrical supply. In the event of

power supply failure, an emergency ((~~electrical~~)) power system shall automatically illuminate all of the following areas:

1. *Aisles* and unenclosed egress stairways in rooms and spaces that require two or more *means of egress*.
2. *Corridors*, *interior exit stairways* and *ramps* and *exit passageways* in buildings required to have two or more *exits*.
3. Exterior egress components at other than their levels of *exit discharge* until *exit discharge* is accomplished for buildings required to have two or more *exits*.
4. Interior *exit discharge* elements, as permitted in Section 1027.1, in buildings required to have two or more *exits*.
5. Exterior landings as required by Section 1008.1.6 for *exit discharge* doorways in buildings required to have two or more *exits*.

The emergency power system shall provide power for a duration of not less than 90 minutes and shall consist of storage batteries, unit equipment or an on-site generator. The installation of the emergency power system shall be in accordance with Section 2702.

1006.3.1 Illumination level under emergency power. Emergency lighting facilities shall be arranged to provide initial illumination that is at least an average of 1 footcandle (11 lux) and a minimum at any point of 0.1 footcandle (1 lux) measured along the path of egress at floor level. Illumination levels shall be permitted to decline to 0.6 footcandle (6 lux) average and a minimum at any point of 0.06 footcandle (0.6 lux) at the end of the emergency lighting time

duration. A maximum-to-minimum illumination uniformity ratio of 40 to 1 shall not be exceeded.

SECTION 1007

ACCESSIBLE MEANS OF EGRESS

[W] 1007.1 Accessible means of egress required. *Accessible means of egress* shall comply with this section. *Accessible* spaces shall be provided with not less than one *accessible means of egress*. Where more than one *means of egress* are required by Section 1015.1 or 1021.1 from any *accessible* space, each *accessible* portion of the space shall be served by not less than two *accessible means of egress*.

Exceptions:

1. *Accessible means of egress* are not required in alterations to existing buildings.
2. One *accessible means of egress* is required from an *accessible mezzanine* level in accordance with Section 1007.3, 1007.4 or 1007.5.
3. In assembly areas with sloped or stepped *aisles*, one *accessible means of egress* is permitted where the common path of travel is *accessible* and meets the requirements in Section 1028.8.
4. In parking garages, *accessible means of egress* are not required to serve parking areas that do not contain *accessible* parking spaces.

1007.2 Continuity and components. Each required *accessible means of egress* shall be continuous to a *public way* and shall consist of one or more of the following components:

1. *Accessible* routes complying with Section 1104.

2. *Interior exit stairways* complying with Sections 1007.3 and 1022.

3. Interior *exit access stairways* complying with Sections 1007.3 and 1009.3.

4. Exterior *exit stairways* complying with Sections 1007.3 and 1026 and serving levels other than the *level of exit discharge*.

Interpretation I1007.2a: An exit passageway is not required on the level of exit discharge to connect the elevator with the exterior exit door.

5. Elevators complying with Section 1007.4.

6. Platform lifts complying with Section 1007.5.

7. Horizontal exits complying with Section 1025.

8. Ramps complying with Section 1010.

9. *Areas of refuge* complying with Section 1007.6.

10. Exterior area for assisted rescue complying with Section 1007.7.

1007.2.1 Elevators required. In buildings where a required *accessible* floor is four or more stories above or below a *level of exit discharge*, at least one required *accessible means of egress* shall be an elevator complying with Section 1007.4.

Interpretation I1007.2b: The level of exit discharge is not counted when determining whether an accessible floor is four stories above or below a level of exit discharge. See Figure 1007.2.b.

Exceptions:

1. In buildings equipped throughout with an *automatic sprinkler system* installed in accordance with Section 903.3.1.1 or 903.3.1.2, the elevator shall not be required on

floors provided with a *horizontal exit* and located at or above the *levels of exit discharge*.

2. In buildings equipped throughout with an *automatic sprinkler system* installed in accordance with Section 903.3.1.1 or 903.3.1.2, the elevator shall not be required on floors provided with a *ramp* conforming to the provisions of Section 1010.

Interpretation I1007.2c: In exception 2, the ramp shall be part of an accessible means of egress.

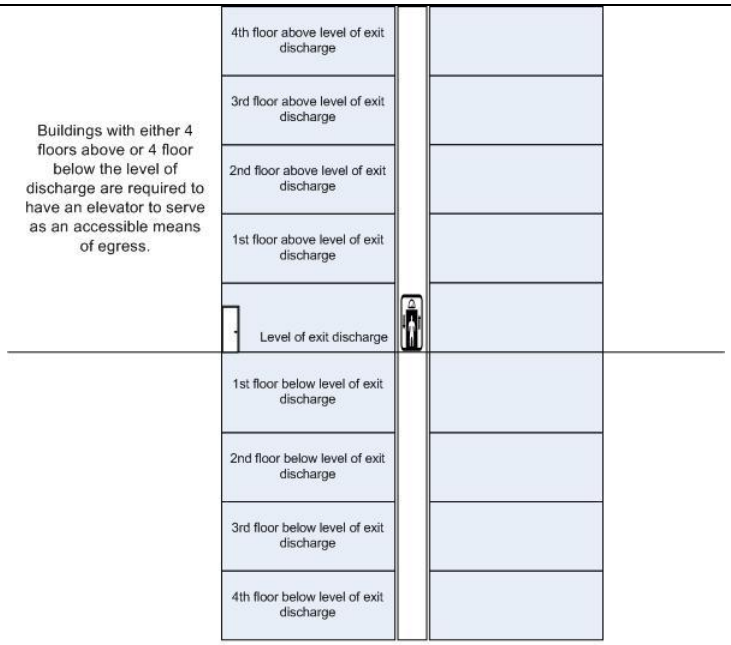

Figure 1007.2b

***

1007.4 Elevators. In order to be considered part of an *accessible means of egress*, an elevator shall comply with the emergency operation and signaling device requirements of Section 2.27 of ASME A17.1. ((~~Standby~~)) A legally required standby power system shall be provided for operation of the elevator, the shunt trip and lighting for elevator cars, control rooms, machine

rooms, and machinery spaces in accordance with Chapter 27 and ((~~Section 3003~~)) the Seattle Electrical Code. The elevator shall be accessed from either an *area of refuge* complying with Section 1007.6 or a *horizontal exit*.

Exceptions:

1. Elevators are not required to be accessed from an *area of refuge* or *horizontal exit* in *open parking garages*.
2. Elevators are not required to be accessed from an *area of refuge* or *horizontal exit* in buildings and facilities equipped throughout with an *automatic sprinkler system* installed in accordance with Section 903.3.1.1 or 903.3.1.2.
3. Elevators not required to be located in a shaft in accordance with Section 712 are not required to be accessed from an *area of refuge* or *horizontal exit*.
4. Elevators are not required to be accessed from an *area of refuge* or *horizontal exit* for smoke protected seating areas complying with Section 1028.6.2.

1007.5 Platform lifts. Platform (wheelchair) lifts shall not serve as part of an *accessible means of egress*, except where allowed as part of a required *accessible route* in Section 1109.8, Items 1 through 9. ((~~Standby~~)) A legally required standby power system shall be provided in accordance with Chapter 27 for platform lifts permitted to serve as part of a *means of egress*.

1007.5.1 Openness. Platform lifts on an *accessible means of egress* shall not be installed in a fully enclosed hoistway.

1007.6 Areas of refuge. Every required *area of refuge* shall be *accessible* from the space it serves by an *accessible means of egress*. The maximum travel distance from any *accessible*

space to an *area of refuge* shall not exceed the travel distance permitted for the occupancy in accordance with Section 1016.1. Every required *area of refuge* shall have direct access to a *stairway* complying with Sections 1007.3 or an elevator complying with Section 1007.4. Where an elevator lobby is used as an *area of refuge*, the shaft and lobby shall comply with Section 920.21 for elevator hoistway pressurization ((~~1022.10 for smokeproof enclosures~~)) except where the elevators are in an *area of refuge* formed by a *horizontal exit* or smoke barrier.

1007.6.1 Size. Each *area of refuge* shall be sized to accommodate one *wheelchair space* of 30 inches by 48 inches (762 mm by 1219 mm) for each 200 occupants or portion thereof, based on the *occupant load* of the *area of refuge* and areas served by the *area of refuge*. Such *wheelchair spaces* shall not reduce the required *means of egress* width. Access to any of the required *wheelchair spaces* in an *area of refuge* shall not be obstructed by more than one adjoining *wheelchair space*.

1007.6.2 Separation. Each *area of refuge* shall be separated from the remainder of the story by a *smoke barrier* complying with Section 709 or a *horizontal exit* complying with Section 1025. Each *area of refuge* shall be designed to minimize the intrusion of smoke.

Exception: *Areas of refuge* located within an enclosure for *exit access stairways* or *interior exit stairways*.

1007.6.3 Two-way communication. *Areas of refuge* shall be provided with a two-way communication system complying with Sections 1007.8.1 and 1007.8.2.

***

1007.8 Two-way communication. A two-way communication system shall be provided at the elevator landing on each *accessible* floor that is one or more stories above or below the *story* of *exit discharge* complying with Sections 1007.8.1 and 1007.8.2.

Exceptions:

1. Two-way communication systems are not required at the elevator landing where the two-way communication system is provided within *areas of refuge* in accordance with Section 1007.6.3.
2. Two-way communication systems are not required on floors provided with *ramps* conforming to the provisions of Section 1010.

[W] 1007.8.1 System requirements. Two-way communication systems shall provide communication between each required location and the fire command center or a central control point location *approved* by the fire department. Where the central control point is not constantly attended, a two-way communication system shall have a timed automatic telephone dial-out capability to a monitoring location ((~~or 9-1-1~~)). The two-way communication system shall include both audible and visible signals. The two-way communication system shall have a battery backup or an approved alternate source of power that is capable of 90 minutes use upon failure of the normal power source.

1007.8.2 Directions. Directions for the use of the two-way communication system, instructions for summoning assistance via the two-way communication system and written identification of the location shall be posted adjacent to the two-way communication system.

***

SECTION 1008

DOORS, GATES AND TURNSTILES

1008.1 Doors. *Means of egress* doors shall meet the requirements of this section. Doors serving a *means of egress* system shall meet the requirements of this section and Section 1020.2. Doors provided for egress purposes in numbers greater than required by this code shall meet the requirements of this section. See Section 3201 for doors swinging over public property.

Means of egress doors shall be readily distinguishable from the adjacent construction and finishes such that the doors are easily recognizable as doors. Mirrors or similar reflecting materials shall not be used on *means of egress* doors. *Means of egress* doors shall not be concealed by curtains, drapes, decorations or similar materials.

1008.1.1 Size of doors. The minimum width of each door opening shall be sufficient for the *occupant load* thereof and shall provide a clear width of 32 inches (813 mm). Clear openings of doorways with swinging doors shall be measured between the face of the door and the stop, with the door open 90 degrees (1.57 rad). Where this section requires a minimum clear width of 32 inches (813 mm) and a door opening includes two door leaves without a mullion, one leaf shall provide a clear opening width of 32 inches (813 mm). The maximum width of a swinging door leaf shall be 48 inches (1219 mm) nominal. *Means of egress* doors in a Group I-2 occupancy used for the movement of beds shall provide a clear width not less than 41-1/2 inches (1054 mm). The height of door openings shall not be less than 80 inches (2032 mm).

Exceptions:

1. The minimum and maximum width shall not apply to door openings that are not part of the required *means of egress* in Group R-2 and R-3 occupancies.
2. Door openings to resident *sleeping units* in Group I-3 occupancies shall have a clear width of not less than 28 inches (711 mm).
3. Door openings to storage closets less than 10 square feet (0.93 m2) in area shall not be limited by the minimum width.
4. Width of door leaves in revolving doors that comply with Section 1008.1.4.1 shall not be limited.
5. Door openings within a *dwelling unit* or *sleeping unit* shall not be less than 78 inches (1981 mm) in height.
6. Exterior door openings in *dwelling units* and *sleeping units*, other than the required *exit* door, shall not be less than 76 inches (1930 mm) in height.
7. In other than Group R-1 occupancies, the minimum widths shall not apply to interior egress doors within a *dwelling unit* or *sleeping unit* that is not required to be an *Accessible unit*, *Type A unit* or *Type B unit*.
8. Door openings required to be *accessible* within *Type B units* shall have a minimum clear width of 31.75 inches (806 mm).

1008.1.1.1 Projections into clear width. There shall not be projections into the required clear width lower than 34 inches (864 mm) above the floor or ground. Projections into the clear opening width between 34 inches (864 mm) and 80 inches (2032 mm) above the floor or ground shall not exceed 4 inches (102 mm).

Exception: Door closers and door stops shall be permitted to be 78 inches (1980 mm) minimum above the floor.

1008.1.2 Door swing. Egress doors shall be of the pivoted or side-hinged swinging type.

Exceptions:

1. Private garages, office areas, factory and storage areas with an *occupant load* of 10 or less.
2. Group I-3 occupancies used as a place of detention.
3. Critical or intensive care patient rooms within suites of health care facilities.
4. Doors within or serving a single *dwelling unit* in Groups R-2 and R-3.
5. In other than Group H occupancies, revolving doors complying with Section 1008.1.4.1.
6. In other than Group H occupancies, horizontal sliding doors complying with Section 1008.1.4.3 are permitted in a *means of egress*.
7. Power-operated doors in accordance with Section 1008.1.4.2.
8. Doors serving a bathroom within an individual *sleeping unit* in Group R-1.
9. In other than Group H occupancies, manually operated horizontal sliding doors are permitted in a *means of egress* from spaces with an *occupant load* of 10 or less.

Doors shall swing in the direction of egress travel where serving a room or area containing an *occupant load* of 50 or more persons or a Group H occupancy.

1008.1.3 Door opening force. The force for pushing or pulling open interior swinging egress doors, other than *fire doors*, shall not exceed 5 pounds (22 N). For other swinging doors, as

well as sliding and folding doors, the door latch shall release when subjected to a 15-pound (67 N) force. The door shall be set in motion when subjected to a 30-pound (133 N) force. The door shall swing to a full open position when subjected to a 15-pound (67 N) force.

1008.1.3.1 Location of applied forces. Forces shall be applied to the latch side of the door.

1008.1.4 Special doors. Special doors and security grilles shall comply with the requirements of Sections 1008.1.4.1 through 1008.1.4.4.

1008.1.4.1 Revolving doors. Revolving doors shall comply with the following:

1. Each revolving door shall be capable of collapsing into a bookfold position with parallel egress paths providing an aggregate width of 36 inches (914 mm).
2. A revolving door shall not be located within 10 feet (3048 mm) of the foot of or top of *stairs* or escalators. A dispersal area shall be provided between the *stairs* or escalators and the revolving doors.
3. The revolutions per minute (rpm) for a revolving door shall not exceed those shown in Table 1008.1.4.1.
4. Each revolving door shall have a side-hinged swinging door which complies with Section 1008.1 in the same wall and within 10 feet (3048 mm) of the revolving door.
5. Revolving doors shall not be part of an *accessible route* required by Section 1007 and Chapter 11.

TABLE 1008.1.4.1
REVOLVING DOOR SPEEDS

INSIDE DIAMETER (feet-inches)	POWER-DRIVEN-TYPE SPEED CONTROL (rpm)	MANUAL-TYPE SPEED CONTROL (rpm)
6-6	11	12
7-0	10	11
7-6	9	11
8-0	9	10
8-6	8	9
9-0	8	9
9-6	7	8
10-0	7	8

For SI: 1 inch = 25.4 mm, 1 foot = 304.8 mm.

1008.1.4.1.1 Egress component. A revolving door used as a component of a *means of egress* shall comply with Section 1008.1.4.1 and the following three conditions:

1. Revolving doors shall not be given credit for more than 50 percent of the required egress capacity.
2. Each revolving door shall be credited with no more than a 50-person capacity.
3. Each revolving door shall be capable of being collapsed when a force of not more than 130 pounds (578 N) is applied within 3 inches (76 mm) of the outer edge of a wing.

1008.1.4.1.2 Other than egress component. A revolving door used as other than a component of a *means of egress* shall comply with Section 1008.1.4.1. The collapsing force of a revolving door not used as a component of a *means of egress* shall not be more than 180 pounds (801 N).

Exception: A collapsing force in excess of 180 pounds (801 N) is permitted if the collapsing force is reduced to not more than 130 pounds (578 N) when at least one of the following conditions is satisfied:

1. There is a power failure or power is removed to the device holding the door wings in position.

2. There is an actuation of the *automatic sprinkler system* where such system is provided.
3. There is an actuation of a smoke detection system which is installed in accordance with Section 907 to provide coverage in areas within the building which are within 75 feet (22 860 mm) of the revolving doors.
4. There is an actuation of a manual control switch, in an *approved* location and clearly defined, which reduces the holding force to below the 130-pound (578 N) force level.

1008.1.4.2 Power-operated doors. Where *means of egress* doors are operated by power, such as doors with a photoelectric-actuated mechanism to open the door upon the approach of a person, or doors with power-assisted manual operation, the design shall be such that in the event of power failure, the door is capable of being opened manually to permit *means of egress* travel or closed where necessary to safeguard *means of egress*. The forces required to open these doors manually shall not exceed those specified in Section 1008.1.3, except that the force to set the door in motion shall not exceed 50 pounds (220 N). The door shall be capable of swinging from any position to the full width of the opening in which such door is installed when a force is applied to the door on the side from which egress is made. Full-power-operated doors shall comply with BHMA A156.10. Power-assisted and low-energy doors shall comply with BHMA A156.19.

Exceptions:

1. Occupancies in Group I-3.

2. Horizontal sliding doors complying with Section 1008.1.4.3.
3. For a biparting door in the emergency breakout mode, a door leaf located within a multiple-leaf opening shall be exempt from the minimum 32-inch (813 mm) single-leaf requirement of Section 1008.1.1, provided a minimum 32-inch (813 mm) clear opening is provided when the two biparting leaves meeting in the center are broken out.

1008.1.4.3 Horizontal sliding doors. In other than Group H occupancies, horizontal sliding doors permitted to be a component of a *means of egress* in accordance with Exception 6 to Section 1008.1.2 shall comply with all of the following criteria:

1. The doors shall be power operated and shall be capable of being operated manually in the event of power failure.
2. The doors shall be openable by a simple method from both sides without special knowledge or effort.
3. The force required to operate the door shall not exceed 30 pounds (133 N) to set the door in motion and 15 pounds (67 N) to close the door or open it to the minimum required width.
4. The door shall be openable with a force not to exceed 15 pounds (67 N) when a force of 250 pounds (1100 N) is applied perpendicular to the door adjacent to the operating device.
5. The door assembly shall comply with the applicable *fire protection rating* and, where rated, shall be self-closing or automatic closing by smoke detection in accordance

with Section 716.5.9.3, shall be installed in accordance with NFPA 80 and shall comply with Section 716.

6. The door assembly shall have an integrated standby power supply.
7. The door assembly power supply shall be electrically supervised.
8. The door shall open to the minimum required width within 10 seconds after activation of the operating device.

1008.1.4.4 Security grilles. In Groups B, F, M and S, horizontal sliding or vertical security grilles are permitted at the main *exit* and shall be openable from the inside without the use of a key or special knowledge or effort during periods that the space is occupied. The grilles shall remain secured in the full-open position during the period of occupancy by the general public. Where two or more *means of egress* are required, not more than one-half of the *exits* or *exit access doorways* shall be equipped with horizontal sliding or vertical security grilles.

1008.1.5 Floor elevation. There shall be a floor or landing on each side of a door. Such floor or landing shall be at the same elevation on each side of the door. Landings shall be level except for exterior landings, which are permitted to have a slope not to exceed 0.25 unit vertical in 12 units horizontal (2-percent slope).

Exceptions:

1. Doors serving individual *dwelling units* in Groups R-2 and R-3 where the following apply:

1.1. A door is permitted to open at the top step of a((~~n interior~~)) *flight* of *stairs*, provided the door does not swing over the top step.

1.2. Screen doors and storm doors are permitted to swing over *stairs* or landings.

2. Exterior doors as provided for in Section 1003.5, Exception 1, and Section 1020.2, which are not on an accessible route.

3. In Group R-3 occupancies not required to be Accessible units, Type A units or Type B units, the landing at an exterior doorway shall not be more than 7-3/4 inches (197 mm) below the top of the threshold, provided the door, other than an exterior storm or screen door, does not swing over the landing.

4. Variations in elevation due to differences in finish materials, but not more than 1/2 inch (12.7 mm).

5. Exterior decks, patios or balconies that are part of Type B dwelling units, have impervious surfaces and that are not more than 4 inches (102 mm) below the finished floor level of the adjacent interior space of the dwelling unit.

1008.1.6 Landings at doors. Landings shall have a width not less than the width of the *stairway* or the door, whichever is greater. Doors in the fully open position shall not reduce a required dimension by more than 7 inches (178 mm). When a landing serves an *occupant load* of 50 or more, doors in any position shall not reduce the landing to less than one-half its required width. <u>When doors open over landings, doors in any position shall not reduce the landing length to less than 12 inches (305 mm).</u> Landings shall have a length measured in the direction of travel of not less than 44 inches (1118 mm).

Exception: Landing length in the direction of travel in Groups R-3 and U and within individual units of Group R-2 need not exceed 36 inches (914 mm).

Interpretation I1008.1.6: Landing length, width and slope shall be measured as specified in Section 1009.8 and 1009.9.1. See Figures 1008.1.6(1), 1008.1.6(2) and 1008.1.6(3) for illustrations of the requirements of this section.

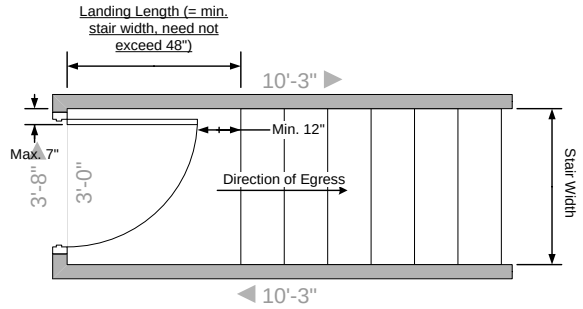

Figure 1008.1.6(1)
(Landing Dimensions Only)

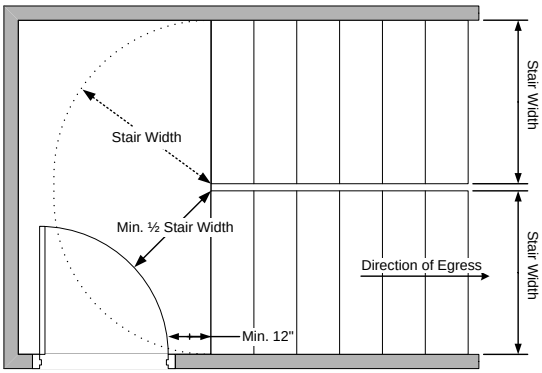

Figure 1008.1.6(2)
(Landing Dimensions Only)

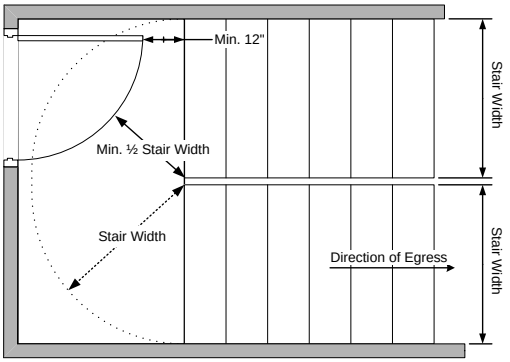

Figure 1008.1.6(3)
(Landing Dimensions Only)

1008.1.7 Thresholds. Thresholds at doorways shall not exceed 3/4 inch (19.1 mm) in height above the finished floor or landing for sliding doors serving *dwelling units* or 1/2 inch (12.7 mm) above the finished floor or landing for other doors. Raised thresholds and floor level changes greater than 1/4 inch (6.4 mm) at doorways shall be beveled with a slope not greater than one unit vertical in two units horizontal (50-percent slope).

Exception: In occupancy Group R-2 or R-3, threshold heights for sliding and side-hinged exterior doors shall be permitted to be up to 7-3/4 inches (197 mm) in height if all of the following apply:

1. The door is not part of the required *means of egress*.
2. The door is not part of an *accessible route* as required by Chapter 11.
3. The door is not part of an *Accessible unit*, *Type A unit* or *Type B unit*.

1008.1.8 Door arrangement. Space between two doors in a series shall be 48 inches (1219 mm) minimum plus the width of a door swinging into the space. Doors in a series shall swing either in the same direction or away from the space between the doors.

Exceptions:

1. The minimum distance between horizontal sliding power-operated doors in a series shall be 48 inches (1219 mm).
2. Storm and screen doors serving individual *dwelling units* in Groups R-2 and R-3 need not be spaced 48 inches (1219 mm) from the other door.
3. Doors within individual *dwelling units* in Groups R-2 and R-3 other than within *Type A* dwelling units.

1008.1.9 Door operations. Except as specifically permitted by this section egress doors shall be readily openable from the egress side without the use of a key or special knowledge or effort.

Note: Stairway doors shall also comply with Section 1008.1.9.11.

1008.1.9.1 Hardware. Door handles, pulls, latches, locks and other operating devices on doors required to be *accessible* by Chapter 11 shall not require tight grasping, tight pinching or twisting of the wrist to operate.

1008.1.9.2 Hardware height. Door handles, pulls, latches, locks and other operating devices shall be installed 34 inches (864 mm) minimum and 48 inches (1219 mm) maximum above the finished floor. Locks used only for security purposes and not used for normal operation are permitted at any height.

Exception: Access doors or gates in barrier walls and fences protecting pools, spas and hot tubs shall be permitted to have operable parts of the release of latch on self-latching devices at 54 inches (1370 mm) maximum above the finished floor or ground, provided

the self-latching devices are not also self-locking devices operated by means of a key, electronic opener or integral combination lock.

1008.1.9.3 Locks and latches. Locks and latches shall be permitted to prevent operation of doors where any of the following exists:

1. Places of detention or restraint as approved by the building official.
2. In buildings in occupancy Group A having an *occupant load* of 300 or less, Groups B, F, M and S, and in *places of religious worship*, the main exterior door or doors are permitted to be equipped with key-operated locking devices from the egress side provided:
   2.1. The locking device is readily distinguishable as locked;
   2.2. A readily visible durable sign is posted on the egress side on or adjacent to the door stating: THIS DOOR TO REMAIN UNLOCKED ((~~WHEN BUILDING IS OCCUPIED~~)) DURING BUSINESS HOURS. The sign shall be in letters 1 inch (25 mm) high on a contrasting background; and
   2.3. The use of the key-operated locking device is revokable by the *building official* for due cause.
3. Where egress doors are used in pairs, *approved* automatic flush bolts shall be permitted to be used, provided that the door leaf having the automatic flush bolts has no doorknob or surface-mounted hardware on the egress side of the door.
4. Doors from individual *dwelling* or *sleeping units* of Group R occupancies having an *occupant load* of 10 or less are permitted to be equipped with a night latch, dead bolt

or security chain, provided such devices are openable from the inside without the use of a key or tool.

5. *Fire doors* after the minimum elevated temperature has disabled the unlatching mechanism in accordance with listed fire door test procedures.

[W] 6. Approved, listed locks without delayed egress shall be permitted in Group R-2 boarding homes licensed by Washington state, provided that:

6.1. The clinical needs of one or more patients require specialized security measures for their safety.

6.2. The doors unlock upon actuation of the automatic sprinkler system or automatic fire detection system.

6.3. The doors unlock upon loss of electrical power controlling the lock or lock mechanism.

6.4. The lock shall be capable of being deactivated by a signal from a switch located in an approved location.

6.5. There is a system, such as a keypad and code, in place that allows visitors, staff persons and appropriate residents to exit. Instructions for exiting shall be posted within six feet of the door.

7. Doors from elevator lobbies providing access to exits are permitted to be locked during or after business hours where items 7.1 through 7.5 are satisfied.

7.1. The lobby doors shall unlock automatically upon fire alarm.

7.2. The lobby doors shall unlock automatically upon power loss.

7.3. The alarm system shall include smoke detection in the elevator lobby and at least two detectors on the tenant side within 15 feet of the door;

7.4. Access through the tenant portion of the building to both exits shall be unobstructed; and

7.5. The building shall have an automatic sprinkler system throughout in accordance with Section 903.3.1.1 or 903.3.1.2.

1008.1.9.4 Bolt locks. Manually operated flush bolts or surface bolts are not permitted.

Exceptions:

1. On doors not required for egress in individual dwelling units or sleeping units.
2. Where a pair of doors serves a storage or equipment room, manually operated edge- or surface-mounted bolts or self-latching flush bolts are permitted on the inactive leaf.
3. Where a pair of doors serves an *occupant load* of less than 50 persons in a Group B, F or S occupancy, manually operated edge- or surface-mounted bolts are permitted on the inactive leaf. The inactive leaf shall contain no doorknobs, panic bars or similar operating hardware.
4. Where a pair of doors serves a Group B, F or S occupancy, manually operated edge- or surface-mounted bolts are permitted on the inactive leaf provided such inactive leaf is not needed to meet egress width requirements and the building is equipped throughout with an *automatic sprinkler system* in accordance with

Section 903.3.1.1. The inactive leaf shall contain no doorknobs, panic bars or similar operating hardware.

5. Where a pair of doors serves patient care rooms in Group I-2 occupancies, self-latching edge- or surface-mounted bolts are permitted on the inactive leaf provided that the inactive leaf is not needed to meet egress width requirements and the inactive leaf contains no doorknobs, panic bars or similar operating hardware.

1008.1.9.5 Unlatching. The unlatching of any door or leaf shall not require more than one operation.

Exceptions:

1. Places of detention or restraint.
2. Where manually operated bolt locks are permitted by Section 1008.1.9.4.
3. Doors with automatic flush bolts as permitted by Section 1008.1.9.3, Exception 3.
4. Doors from individual dwelling units and sleeping units of Group R occupancies as permitted by Section 1008.1.9.3, Exception 4.

[W] **((~~1008.1.9.5.1 Closet and bathroom doors in Group R-4 occupancies.~~** ~~In Group R-4 occupancies, closet doors that latch in the closed position shall be openable from inside the closet, and bathroom doors that latch in the closed position shall be capable of being unlocked from the ingress side.~~))

[W] 1008.1.9.6 Special locking arrangements in Group I-2. *Approved* special egress locks shall be permitted in a Group I-2 occupancy where the clinical needs of persons

receiving care require such locking. Special egress locks shall be permitted in such occupancies where the building is equipped throughout with an *automatic sprinkler system* in accordance with Section 903.3.1.1 or an *approved* automatic smoke or heat detection system installed in accordance with Section 907, provided that the doors are installed and operate in accordance with Items 1 through 7.

1. The doors unlock upon actuation of the automatic sprinkler system or automatic fire detection system.
2. The doors unlock upon loss of power controlling the lock or lock mechanism.
3. The door locks shall have the capability of being unlocked by a signal from the *fire command center*, a nursing station or other *approved* location.
4. A building occupant shall not be required to pass through more than one door equipped with a special egress lock before entering an *exit*.
5. The procedures for the operation(s) of the unlocking system shall be described and *approved* as part of the emergency planning and preparedness required by Chapter 4 of the *International Fire Code*.
6. There is a system, such as a keypad and code, in place that allows visitors, staff persons and appropriate residents to exit. Instructions for exiting shall be posted within six feet of the door.

((~~6. All clinical staff shall have the keys, codes or other means necessary to operate the locking devices.~~))

7. Emergency lighting shall be provided at the door.

Exception: Items 1 through 4 and 6 shall not apply to doors to areas where persons, ((~~which~~)) who because of clinical needs, require restraint or containment as part of the function of a psychiatric treatment area provided that all clinical staff shall have the keys, codes or other means necessary to operate the locking devices.

1008.1.9.7 Delayed egress locks. *Approved*, *listed*, delayed egress locks shall be permitted to be installed on doors serving any occupancy except Group A, E and H occupancies in buildings that are equipped throughout with an *automatic sprinkler system* in accordance with Section 903.3.1.1 or an *approved* automatic smoke or heat detection system installed in accordance with Section 907, provided that the doors unlock in accordance with Items 1 through 6 below. Delayed egress locks are permitted in libraries in both Group A and E occupancies in locations other than at main exit doors, and in Group E day care occupancies. A building occupant shall not be required to pass through more than one door equipped with a delayed egress lock before entering an *exit*.

1. The doors unlock upon actuation of the *automatic sprinkler system* or automatic fire detection system.
2. The doors unlock upon loss of power controlling the lock or lock mechanism.
3. The door locks shall have the capability of being unlocked by a signal from the fire command center.
4. The initiation of an irreversible process which will release the latch in not more than 15 seconds when a force of not more than 15 pounds (67 N) is applied for 1 second to the release device. Initiation of the irreversible process shall activate an audible signal

in the vicinity of the door. Once the door lock has been released by the application of force to the releasing device, relocking shall be by manual means only.

Exception: Where *approved*, a delay of not more than 30 seconds is permitted.

5. A sign shall be provided on the door located above and within 12 inches (305 mm) of the release device reading: PUSH UNTIL ALARM SOUNDS. DOOR CAN BE OPENED IN 15 [30] SECONDS.
6. Emergency lighting shall be provided at the door.

1008.1.9.8 Access-controlled egress doors. The entrance doors in a *means of egress* in buildings with an occupancy in Groups A, B, E, I-2, M, R-1 or R-2, and entrance doors to tenant spaces in occupancies in Groups A, B, E, I-2, M, R-1 or R-2, are permitted to be equipped with an *approved* entrance and egress access control system, listed in accordance with UL 294, which shall be installed in accordance with all of the following criteria:

1. A sensor shall be provided on the egress side arranged to detect an occupant approaching the doors. The doors shall be arranged to unlock by a signal from or loss of power to the sensor.
2. Loss of power to that part of the access control system which locks the doors shall automatically unlock the doors.
3. The doors shall be arranged to unlock from a manual unlocking device located 40 inches to 48 inches (1016 mm to 1219 mm) vertically above the floor and within 5 feet (1524 mm) of the secured doors. Ready access shall be provided to the manual unlocking device and the device shall be clearly identified by a sign that reads “PUSH

TO EXIT." When operated, the manual unlocking device shall result in direct interruption of power to the lock—independent of the access control system electronics—and the doors shall remain unlocked for a minimum of 30 seconds.

4. Activation of the building fire alarm system, if provided, shall automatically unlock the doors, and the doors shall remain unlocked until the fire alarm system has been reset.
5. Activation of the building automatic sprinkler or fire detection system, if provided, shall automatically unlock the doors. The doors shall remain unlocked until the fire alarm system has been reset.
6. Entrance doors in buildings with an occupancy in Group A, B, E or M shall not be secured from the egress side during periods that the building is open to the general public.
7. The access control system shall be listed or shall be comprised of approved components.

Note: Components bearing a "recognized component" mark from an approved agency shall be approved.

1008.1.9.9 Electromagnetically locked egress doors. Doors in the *means of egress* in buildings with an occupancy in Group A, B, E, M, R-1 or R-2, and doors to tenant spaces in Group A, B, E, M, R-1 or R-2, shall be permitted to be electromagnetically locked if equipped with listed hardware that incorporates a built-in switch and meet the requirements below:

1. The listed hardware ((~~that~~)) is affixed to the door leaf and has an obvious method of operation that allows immediate egress.
2. The hardware is readily operated under all lighting conditions without special knowledge, keys or tools, and ((~~2. The listed hardware~~)) is capable of being operated with one hand.
3. Operation of the listed hardware directly interrupts the power to the electromagnetic lock and unlocks the door immediately.
4. Loss of power to the listed hardware automatically unlocks the door.
5. Where panic or *fire exit hardware* is required by Section 1008.1.10, operation of the listed panic or *fire exit hardware* also releases the electromagnetic lock.

1008.1.9.10 Locking arrangements in correctional facilities. In occupancies in Groups A-2, A-3, A-4, B, E, F, I-2, I-3, M and S within correctional and detention facilities, doors in *means of egress* serving rooms or spaces occupied by persons whose movements are controlled for security reasons shall be permitted to be locked when equipped with egress control devices which shall unlock manually and by at least one of the following means:

1. Activation of an *automatic sprinkler system* installed in accordance with Section 903.3.1.1;
2. Activation of an *approved* manual alarm box; or
3. A signal from a *constantly attended location*.

1008.1.9.11 Stairway doors. Interior *stairway means of egress* doors shall be openable from both sides without the use of a key or special knowledge or effort.

Exceptions:

1. *Stairway* discharge doors shall be openable from the egress side and shall only be locked from the opposite side.
2. This section shall not apply to doors arranged in accordance with Section 403.5.3.
3. In *stairways* serving not more than four stories, doors are permitted to be locked from the side opposite the egress side, provided they are openable from the egress side and capable of being unlocked simultaneously without unlatching upon a signal from the fire command center, if present, or a signal by emergency personnel from a single location inside the main entrance to the building.
4. *Stairway exit* doors shall be openable from the egress side and shall only be locked from the opposite side in Group B, F, M and S occupancies where the only interior access to the tenant space is from a single *exit stair* where permitted in Section 1021.2.
5. *Stairway exit* doors shall be openable from the egress side and shall only be locked from the opposite side in Group R-2 occupancies where the only interior access to the dwelling unit is from a single *exit stair* where permitted in Section 1021.2.
6. In *stairways* serving more than four stories in non-high-rise buildings, doors are permitted to be locked from the side opposite the egress side, provided they are openable from the egress side and capable of being unlocked simultaneously without unlatching upon a signal from the fire command center, if present, or a signal by emergency personnel from a single location inside the main entrance to

the building. A communication system that complies with Section 403.5.3.1 shall be provided.

1008.1.10 Panic and fire exit hardware. Doors serving a Group H occupancy and doors serving rooms or spaces with an *occupant load* of 50 or more in a Group A or E occupancy shall not be provided with a latch or lock unless it is *panic hardware* or *fire exit hardware*.

Exception: A main *exit* of a Group A occupancy in compliance with Section 1008.1.9.3, Item 2.

Electrical rooms with equipment rated 1,200 amperes or more and over 6 feet (1829 mm) wide that contain overcurrent devices, switching devices or control devices with *exit* or *exit access* doors shall be equipped with *panic hardware* or *fire exit hardware*. The doors shall swing in the direction of egress travel.

1008.1.10.1 Installation. Where *panic* or *fire exit hardware* is installed, it shall comply with the following:

1. *Panic hardware* shall be *listed* in accordance with UL 305;
2. *Fire exit hardware* shall be *listed* in accordance with UL 10C and UL 305;
3. The actuating portion of the releasing device shall extend at least one-half of the door leaf width; and
4. The maximum unlatching force shall not exceed 15 pounds (67 N).

1008.1.10.2 Balanced doors. If *balanced doors* are used and *panic hardware* is required, the *panic hardware* shall be the push-pad type and the pad shall not extend more than one-half the width of the door measured from the latch side.

***

SECTION 1009

STAIRWAYS

***

1009.2 Interior exit stairways. *Interior exit stairways* shall lead directly to the exterior of the building or shall be extended to the exterior of the building with an *exit passageway* conforming to the requirements of Section 1023, except as permitted in Section 1027.1.

1009.2.1 ~~((**Where required.** *Interior exit stairways* shall be included, as necessary, to meet one or more *means of egress* design requirements, such as required number of *exits* or *exit access* travel distance.~~

~~**1009.2.2**~~))**Enclosure.** All *interior exit stairways* shall be enclosed in accordance with the provisions of Section 1022.

1009.3 Exit access stairways. Floor openings between stories created by *exit access stairways* shall be enclosed.

Exceptions:

[W] 1. In other than Group I-2 and I-3 occupancies, *exit access stairways* that serve, or atmospherically communicate between, only two stories are not required to be enclosed. Such interconnected stories shall not be open to other stories.

2. *Exit access stairways* serving and contained within a single residential *dwelling unit* or *sleeping unit* in Group R-1, R-2 or R-3 occupancies are not required to be enclosed.

[W] 3. In ((~~buildings with only~~)) Group B or M occupancies, *exit access stairways* ((~~openings~~)) that are designed exclusively for circulation are not required to be enclosed provided that the building is equipped throughout with an *automatic sprinkler system* in accordance with Section 903.3.1.1, the area of the floor opening between stories does not exceed twice the horizontal projected area of the *exit access stairway*, and the opening is protected by a draft curtain and closely spaced sprinklers in accordance with NFPA 13.

[W] 4. In other than Group B and M occupancies, *exit access stairways* ((~~openings~~)) that are designed exclusively for circulation are not required to be enclosed provided that the building is equipped throughout with an *automatic sprinkler system* in accordance with Section 903.3.1.1, the floor opening does not connect more than four stories, the area of the floor opening between stories does not exceed twice the horizontal projected area of the *exit access stairway*, and the opening is protected by a draft curtain and closely spaced sprinklers in accordance with NFPA 13.

5. *Exit access stairways* within an *atrium* complying with the provisions of Section 404 are not required to be enclosed.

6. *Exit access stairways* and *ramps* in open parking garages that serve only the parking garage are not required to be enclosed.

7. *Stairways* serving outdoor facilities where all portions of the *means of egress* are essentially open to the outside are not required to be enclosed.

8. *Exit access stairways* serving stages, platforms and *technical production areas* in accordance with Sections 410.6.2 and 410.6.3 are not required to be enclosed.

9. *Stairways* are permitted to be open between the balcony, gallery or press box and the main assembly floor in occupancies such as theaters, *places of religious worship*, auditoriums and sports facilities.

10. In Group I-3 occupancies, *exit access stairways* constructed in accordance with Section 408.5 are not required to be enclosed.

11. Exit access stairways serving and contained within a Group R-3 congregate living facility are not required to be enclosed.

1009.3.1 Construction. Where required, enclosures for *exit access stairways* shall be constructed in accordance with this section. *Exit access stairway* enclosures shall be constructed as *fire barriers* in accordance with Section 707 or *horizontal assemblies* in accordance with Section 711, or both.

1009.3.1.1 Materials. *Exit access stairway* enclosures shall be of materials permitted by the building type of construction.

1009.3.1.2 Fire-resistance rating. *Exit access stairway* enclosures shall have a *fire-resistance rating* of not less than 2 hours where connecting more than four stories ((~~or more~~)), and not less than 1 hour where connecting ((~~less than~~)) four stories or less. The number of stories connected by the *exit access stairway* enclosures shall include any basements, but not any mezzanines. *Exit access stairway* enclosures shall have a *fire-resistance rating* not less than the floor assembly penetrated, but need not exceed 2 hours.

1009.3.1.3 Continuity. *Exit access stairway* enclosures shall have continuity in accordance with Section 707.5 for *fire barriers* or Section 711.4 for *horizontal assemblies* as applicable.

1009.3.1.4 Openings. Openings in an *exit access stairway* enclosure shall be protected in accordance with Section 716 as required for *fire barriers*. Doors shall be self- or automatic-closing by smoke detection in accordance with Section 716.5.9.3.

1009.3.1.4.1 Prohibited openings. Openings other than those necessary for the purpose of the *exit access stairway* enclosure shall not be permitted in *exit access stairway* enclosures.

1009.3.1.5 Penetrations. Penetrations in an *exit access stairway* enclosure shall be protected in accordance with Section 714 as required for *fire barriers*.

1009.3.1.5.1 Prohibited penetrations. Penetrations other than those necessary for the purpose of the *exit access stairway* enclosure shall not be permitted in *exit access stairway* enclosures.

1009.3.1.6 Joints. Joints in an *exit access stairway* enclosure shall comply with Section 715.

1009.3.1.7 Ducts and air transfer openings. Penetrations of an *exit access stairway* enclosure by ducts and air transfer openings shall comply with Section 717.

1009.3.1.8 Exterior walls. Where *exterior walls* serve as a part of an *exit access stairway* enclosure, such walls shall comply with the requirements of Section 705 for *exterior walls* and the fire-resistance-rated enclosure requirements shall not apply.

1009.4 Width. The width of *stairways* shall be determined as specified in Section 1005.1, but such width shall not be less than 44 inches (1118 mm). See Section 1007.3 for *accessible means of egress stairways*.

Exceptions:

1. *Stairways* serving an *occupant load* of less than 50 shall have a width of not less than 36 inches (914 mm).
2. *Spiral stairways* as provided for in Section 1009.12.
3. *Aisle stairs* complying with Section 1028.
4. Where an incline platform lift or *stairway* chairlift is installed on *stairways* serving occupancies in Group R-3, or within *dwelling units* in occupancies in Group R-2, a clear passage width not less than 20 inches (508 mm) shall be provided. If the seat and platform can be folded when not in use, the distance shall be measured from the folded position.
5. <u>Stairways that are designed exclusively for circulation.</u>

***

1009.7 Stair treads and risers. Stair treads and risers shall comply with Sections 1009.7.1 through 1009.7.5.3.

1009.7.1 Dimension reference surfaces. For the purpose of this section, all dimensions are exclusive of carpets, rugs or runners.

1009.7.2 Riser height and tread depth. Stair riser heights shall be 7 inches (178 mm) maximum and 4 inches (102 mm) minimum. The riser height shall be measured vertically

between the *nosings* of adjacent treads. Rectangular tread depths shall be 11 inches (279 mm) minimum measured horizontally between the vertical planes of the foremost projection of adjacent treads and at a right angle to the tread's *nosing*. *Winder* treads shall have a minimum tread depth of 11 inches (279 mm) between the vertical planes of the foremost projection of adjacent treads at the intersections with the walkline and a minimum tread depth of 10 inches (254 mm) within the clear width of the *stair*.

Exceptions:

1. *Alternating tread devices* in accordance with Section 1009.13.
2. Ship ladders in accordance with Section 1009.14.
3. *Spiral stairways* in accordance with Section 1009.12.
4. *Aisle stairs* in assembly seating areas where the stair pitch or slope is set, for sightline reasons, by the slope of the adjacent seating area in accordance with Section 1028.11.2.
5. In Group R-3 occupancies; within dwelling units in Group R-2 occupancies; and in Group U occupancies that are accessory to a Group R-3 occupancy or accessory to individual dwelling units in Group R-2 occupancies; the maximum riser height shall be 73/4 inches (197 mm); the minimum tread depth shall be 10 inches (254 mm); the minimum *winder* tread depth at the walkline shall be 10 inches (254 mm); and the minimum *winder* tread depth shall be 6 inches (152 mm). A *nosing* projection not less than ¾ inch (19.1 mm) but not more than 1-1/4 inches (32 mm) shall be provided on *stairways* with solid risers where the tread depth is less than 11 inches (279 mm).

6. See ((~~Section 3404.1~~)) *International Existing Building Code* for the replacement of existing *stairways*.

7. In Group I-3 facilities, *stairways* providing access to guard towers, observation stations and control rooms, not more than 250 square feet (23 m^2) in area, shall be permitted to have a maximum riser height of 8 inches (203 mm) and a minimum tread depth of 9 inches (229 mm).

1009.7.3 Winder treads. *Winder* treads are not permitted in *means of egress stairways* except within a *dwelling unit*.

Exceptions:

1. Curved *stairways* in accordance with Section 1009.11.

2. *Spiral stairways* in accordance with Section 1009.12.

1009.7.4 Dimensional uniformity. *Stair* treads and risers shall be of uniform size and shape. The tolerance between the largest and smallest riser height or between the largest and smallest tread depth shall not exceed 3/8 inch (9.5 mm) in any *flight* of *stairs*. The greatest *winder* tread depth at the walkline within any *flight* of *stairs* shall not exceed the smallest by more than 3/8 inch (9.5 mm).

Exceptions:

1. Nonuniform riser dimensions of *aisle stairs* complying with Section 1028.11.2.

2. Consistently shaped *winders*, complying with Section 1009.7, differing from rectangular treads in the same *stairway flight*.

Where the bottom or top riser adjoins a sloping *public way*, walkway or driveway having an established grade and serving as a landing, the bottom or top riser is permitted to be reduced along the slope. ((~~to less than 4 inches (102 mm) in height, with the variation in height of the bottom or top riser not to exceed one unit vertical in 12 units horizontal (8-percent slope) of *stairway* width. The *nosings* or leading edges of treads at such nonuniform height risers shall have a distinctive marking stripe, different from any other *nosing* marking provided on the *stair flight*. The distinctive marking stripe shall be visible in descent of the *stair* and shall have a slip-resistant surface. Marking stripes shall have a width of at least 1 inch (25 mm) but not more than 2 inches (51 mm).~~))

1009.7.5 Nosing and riser profile. The radius of curvature at the leading edge of the tread shall be not greater than 9/16 inch (14.3 mm). Beveling of *nosings* shall not exceed 9/16 inch (14.3 mm). Risers shall be solid and vertical or sloped under the tread above from the underside of the *nosing* above at an angle not more than 30 degrees (0.52 rad) from the vertical.

1009.7.5.1 Nosing projection size. The leading edge (*nosings*) of treads shall project not more than 11/4 inches (32 mm) beyond the tread below.

1009.7.5.2 Nosing projection uniformity. All *nosing* projections of the leading edges shall be of uniform size, including the projections of the *nosings* leading edge of the floor at the top of a *flight*.

1009.7.5.3 Solid risers. Risers shall be solid.

Exceptions:

1. Solid risers are not required for *stairways* that are not required to comply with Section 1007.3, provided that the opening between treads does not permit the passage of a sphere with a diameter of 4 inches (102 mm).
2. Solid risers are not required for occupancies in Group I-3 or in Group F, H and S occupancies other than areas accessible to the public. There are no restrictions on the size of the opening in the riser.
3. Solid risers are not required for *spiral stairways* constructed in accordance with Section 1009.12.
4. Solid risers are not required for *alternating tread devices* constructed in accordance with Section 1009.13.

1009.8 Stairway landings. There shall be a floor or landing at the top and bottom of each *stairway*. The width of landings shall not be less than the width of *stairways* they serve. Every landing shall have a minimum width measured perpendicular to the direction of travel equal to the width of the *stairway*. Where the *stairway* has a straight run the depth need not exceed 48 inches (1219 mm). Doors opening onto a landing shall not reduce the landing to less than one-half the required width. When fully open, the door shall not project more than 7 inches (178 mm) into a landing. When *wheelchair spaces* are required on the *stairway* landing in accordance with Section 1007.6.1, the *wheelchair space* shall not be located in the required width of the landing and doors shall not swing over the *wheelchair spaces*.

Exception: *Aisle stairs* complying with Section 1028.

***

1009.10 Vertical rise. A *flight* of *stairs* shall not have a vertical rise greater than 12 feet (3658 mm) between floor levels or landings.

Exceptions:

1. *Aisle stairs* complying with Section 1028.
2. *Alternating tread devices* used as a *means of egress* shall not have a rise greater than 20 feet (6096 mm) between floor levels or landings.
3. *Spiral stairways* used as a *means of egress* from *technical production areas*.
4. Stairways that are designed exclusively for circulation.

***

1009.16 Stairway to roof. In buildings four or more stories above *grade plane*, one *stairway* shall extend to the roof surface, unless the roof has a slope steeper than four units vertical in 12 units horizontal (33-percent slope). In buildings without an occupied roof, access to the roof from the top story shall be permitted to be by an *alternating tread device*.

Exception: Access to the roof is not required in Group R-3 occupancies.

1009.16.1 Roof access. Where a *stairway* is provided to a roof, access to the roof shall be provided through a *penthouse* complying with Section 1509.2.

Exception: In buildings without an occupied roof, access to the roof shall be permitted to be a roof hatch or trap door not less than 16 square feet (1.5 m^2) in area and having a minimum dimension of 2 feet 6 inches (((~~610~~)) 762 mm).

1009.16.2 Protection at roof hatch openings. Where the roof hatch opening providing the required access is located within 10 feet (3049 mm) of the roof edge, such roof access or roof edge shall be protected by *guards* installed in accordance with the provisions of Section 1013.

***

[W] 1009.18 Stairways in individual dwelling units. Stairs or ladders within individual dwelling units used for access to areas of 200 square feet (18.6 m^2) or less which do not contain the primary bathroom or kitchen are exempt from the requirements of Section 1009.

SECTION 1010

RAMPS

[W] 1010.1 Scope. The provisions of this section shall apply to *ramps* used as a component of a *means of egress*.

Exceptions:

1. Other than *ramps* that are part of the *accessible routes* providing access in accordance with Sections 1108.2 through 1108.2.4 and 1108.2.6, ramped *aisles* within assembly rooms or spaces shall conform with the provisions in Section 1028.11.
2. Curb ramps shall comply with ICC A117.1.
3. Vehicle ramps in parking garages for pedestrian *exit access* shall not be required to comply with Sections 1010.4 through 1010.10 when they are not an *accessible route* serving *accessible* parking spaces, other required *accessible* elements or part of an *accessible means of egress*.

4. In a parking garage where one accessible means of egress serving accessible parking spaces or other accessible elements is provided, a second accessible means of egress serving that area shall be permitted to include a vehicle ramp that does not comply with Sections 1010.5, 1010.6 and 1010.9. A landing complying with Sections 1010.7.1 and 1010.7.4 shall be provided at any change of direction in the accessible means of egress.

***

SECTION 1011

EXIT SIGNS

1011.1 Where required. *Exits* and *exit access* doors shall be marked by an *approved* exit sign readily visible from any direction of egress travel. The path of egress travel to *exits* and within *exits* shall be marked by readily visible exit signs to clearly indicate the direction of egress travel in cases where the *exit* or the path of egress travel is not immediately visible to the occupants. Intervening *means of egress* doors within *exits* shall be marked by exit signs. Exit sign placement shall be such that no point in an *exit access corridor* or *exit passageway* is more than 100 feet (30 480 mm) or the *listed* viewing distance for the sign, whichever is less, from the nearest visible *exit* sign. Exit signs shall be located at any other location determined by the building official to be necessary to clearly indicate the direction of egress.

Exceptions:

1. Exit signs are not required in rooms or areas that require only one *exit* or *exit access* other than in buildings designed with a single exit stairway according to Section 1021.2 exception 9.

2. Main exterior *exit* doors or gates that are obviously and clearly identifiable as *exits* need not have exit signs where *approved* by the *building official*.
3. Exit signs are not required in occupancies in Group U and individual *sleeping units* or *dwelling units* in Group R-1, R-2 or R-3.
4. Exit signs are not required in dayrooms, sleeping rooms or dormitories in occupancies in Group I-3.
5. In occupancies in Groups A-4 and A-5, exit signs are not required on the seating side of vomitories or openings into seating areas where exit signs are provided in the concourse that are readily apparent from the vomitories. Egress lighting is provided to identify each vomitory or opening within the seating area in an emergency.
6. Exit signs are not required on exterior stairways serving exterior exit balconies.

***

1011.6 Externally illuminated exit signs. Externally illuminated exit signs shall comply with Sections 1011.6.1 through 1011.6.3.

1011.6.1 Graphics. Every exit sign and directional exit sign shall have plainly legible letters not less than 6 inches (152 mm) high with the principal strokes of the letters not less than 3/4 inch (19.1 mm) wide.

The word "EXIT" shall have letters having a width not less than 2 inches (51 mm) wide, except the letter "I," and the minimum spacing between letters shall not be less than 3/8 inch (9.5 mm). Signs larger than the minimum established in this section shall have letter widths, strokes and spacing in proportion to their height.

The word "EXIT" shall be in high contrast with the background and shall be clearly discernible when the means of exit sign illumination is or is not energized. If a chevron directional indicator is provided as part of the exit sign, the construction shall be such that the direction of the chevron directional indicator cannot be readily changed.

Exception: Existing exit signs with letters at least 5 inches (127 mm) in height are permitted to be reused.

1011.6.2 Exit sign illumination. The face of an exit sign illuminated from an external source shall have an intensity of not less than 5 footcandles (54 lux).

1011.6.3 Power source. Exit signs shall be illuminated at all times. To ensure continued illumination for a duration of not less than 90 minutes in case of primary power loss, the sign illumination means shall be connected to an emergency power system provided from storage batteries, unit equipment or an on-site generator. The installation of the emergency power system shall be in accordance with Chapter 27.

Exception: *Approved* exit sign illumination means that provide continuous illumination independent of external power sources for a duration of not less than 90 minutes, in case of primary power loss, are not required to be connected to an emergency electrical system.

1011.7 Not-an-exit warnings. Placards reading "NOT AN EXIT" shall be installed at all doorways, passageways or stairways which are not exits, exit accesses or exit discharges, and which may be mistaken for an exit. A sign indicating the use of the doorway, passageway or stairway, such as "TO BASEMENT", "STORE ROOM", "LINEN CLOSET", is permitted in lieu of the "NOT AN EXIT" sign.

***

SECTION 1014

EXIT ACCESS

***

1014.2 Egress through intervening spaces. Egress through intervening spaces shall comply with this section.

1. Egress from a room or space shall not pass through adjoining or intervening rooms or areas, except where such adjoining rooms or areas and the area served are accessory to one or the other, are not a Group H occupancy and provide a discernible path of egress travel to an *exit*.

   Exception: *Means of egress* are not prohibited through adjoining or intervening rooms or spaces in a Group H, S or F occupancy when the adjoining or intervening rooms or spaces are the same or a lesser hazard occupancy group.

2. An exit access shall not pass through a room that can be locked to prevent egress.
3. Means of egress from dwelling units or sleeping areas shall not lead through other sleeping areas, toilet rooms or bathrooms.
4. Egress shall not pass through kitchens, storage rooms, closets or spaces used for similar purposes.

   Exceptions:

   1. *Means of egress* are not prohibited through a kitchen area serving adjoining rooms constituting part of the same *dwelling unit* or *sleeping unit.*

2. *Means of egress* are not prohibited through stockrooms in Group M occupancies when all of the following are met:

2.1. The stock is of the same hazard classification as that found in the main retail area;

2.2. Not more than 50 percent of the *exit access* is through the stockroom;

2.3. The stockroom is not subject to locking from the egress side; and

2.4. There is a demarcated, minimum 44-inch-wide (1118 mm) *aisle* defined by full- or partial-height fixed walls or similar construction that will maintain the required width and lead directly from the retail area to the *exit* without obstructions.

5. Unless approved by the building official, where two or more exits are required, exit travel shall not pass through an interior exit stairway as the only way to reach another exit.

1014.2.1 Multiple tenants. Where more than one tenant occupies any one floor of a building or structure, each tenant space, dwelling unit and sleeping unit shall be provided with access to the required *exits* without passing through adjacent tenant spaces, *dwelling units* and *sleeping units*.

Exception: The *means of egress* from a smaller tenant space shall not be prohibited from passing through a larger adjoining tenant space where such rooms or spaces of the smaller tenant occupy less than 10 percent of the area of the larger tenant space through which they pass; are the same or similar occupancy group; a discernable path of egress travel to an *exit* is provided; and the *means of egress* into the adjoining space is not subject to locking from

the egress side. A required *means of egress* serving the larger tenant space shall not pass through the smaller tenant space or spaces.

***

SECTION 1015

EXIT AND EXIT ACCESS DOORWAYS

1015.1 Exits or exit access doorways from spaces. Two *exits* or *exit access* doorways from any space shall be provided where one of the following conditions exists:

1. The *occupant load* of the space exceeds one of the values in Table 1015.1.

   Exceptions:

   1. In Group R-2 and R-3 occupancies, one *means of egress* is permitted within and from individual dwelling units with a maximum *occupant load* of 20 where the dwelling unit is equipped throughout with an *automatic sprinkler system* in accordance with Section 903.3.1.1 or 903.3.1.2.
   2. Care suites in Group I-2 occupancies complying with Section 407.4.3.

2. The common path of egress travel exceeds one of the limitations of Section 1014.3.
3. Where required by Section 1015.3, 1015.4, 1015.5, or 1015.6.

Where a building contains mixed occupancies, each individual occupancy shall comply with the applicable requirements for that occupancy. Where applicable, cumulative *occupant loads* from adjacent occupancies shall be considered in accordance with the provisions of Section 1004.1.

Note: See Section 1008.1.9.3 for conditions in which exit access doors from elevator lobbies are permitted to be locked.

TABLE 1015.1
SPACES WITH ONE EXIT OR EXIT ACCESS DOORWAY

OCCUPANCY	MAXIMUM OCCUPANT LOAD
A, B, E, F, M, U	49
H-1, H-2, H-3	3
H-4, H-5, I-1, I-2, I-3, I-4, R	10
S	29

1015.1.1 Three or more exits or exit access doorways. Three *exits* or *exit access doorways* shall be provided from any space with an *occupant load* of 501 to 1,000. Four *exits* or *exit access doorways* shall be provided from any space with an *occupant load* greater than 1,000.

1015.2 Exit or exit access doorway arrangement. Required *exits* shall be located in a manner that makes their availability obvious. *Exits* shall be unobstructed at all times. *Exit* and *exit access doorways* shall be arranged in accordance with Sections 1015.2.1 and 1015.2.2. Interlocking or *scissor stairs* and stairways that share a wall with other interior exit stairways shall be counted as one *exit or exit access.*

1015.2.1 Two exits or exit access doorways. Where two *exits* or *exit access doorways* are required from any portion of the *exit access*, the *exit* doors or *exit access doorways* shall be placed a distance apart equal to not less than one-half of the length of the maximum overall diagonal dimension of the building or area to be served measured in a straight line between *exit* doors or *exit access doorways*. ((~~Interlocking or *scissor stairs* shall be counted as one *exit stairway.*~~))

Exceptions:

1. Where *interior exit stairways* are interconnected by a 1-hour fire-resistance-rated *corridor* conforming to the requirements of Section 1018, the required *exit* separation shall be measured along the shortest direct line of travel within the *corridor*.

Interpretation I1015.2: Exception 1 applies only where corridors have a one-hour fire-resistance-rating even where Section 1018 would allow non-rated corridors.

2. Where a building is equipped throughout with an *automatic sprinkler system* in accordance with Section 903.3.1.1 or 903.3.1.2, the separation distance of the *exit* doors or *exit access doorways* shall not be less than one-third of the length of the maximum overall diagonal dimension of the area served.

3. Where it is not practical to separate exits by one-half the diagonal dimension, exits from retail and office tenant spaces in Group B and M occupancies and within dwelling units shall be as far apart as reasonably practicable as determined by the building official.

1015.2.2 Three or more exits or exit access doorways. Where access to three or more *exits* is required, at least two *exit* doors or *exit access doorways* shall be arranged in accordance with the provisions of Section 1015.2.1.

***

SECTION 1016

EXIT ACCESS TRAVEL DISTANCE

1016.1 General. Travel distance within the *exit access* portion of the *means of egress* system shall be in accordance with this section.

Note: Additional interior exit stairways or corridors constructed as smoke barriers may be required for standpipe hose connections. See Section 905.4.

1016.2 Limitations. *Exit access* travel distance shall not exceed the values given in Table 1016.2.

1016.2.1 Exterior egress balcony increase. *Exit access* travel distances specified in Table 1016.2 shall be increased up to an additional 100 feet (30 480 mm) provided the last portion of the *exit access* leading to the *exit* occurs on an exterior egress balcony constructed in accordance with Section 1019. The length of such balcony shall not be less than the amount of the increase taken.

TABLE 1016.2
EXIT ACCESS TRAVEL DISTANCE

OCCUPANCY	WITHOUT SPRINKLER SYSTEM (feet)	WITH SPRINKLER SYSTEM (feet)
A, E, F-1, M, R, S-1	200	250[b]
I-1	Not Permitted	250[b]
B	200	300[c]
F-2, S-2, U	300	400[c]
H-1	Not Permitted	75[c]
H-2	Not Permitted	100[c]
H-3	Not Permitted	150[c]
H-4	Not Permitted	175[c]
H-5	Not Permitted	200[c]
I-2, I-3, I-4	Not Permitted	200[c]

For SI: 1 foot = 304.8 mm.
a. See the following sections for modifications to *exit access* travel distance requirements:

Section 402.8: For the distance limitation in *malls*.

Section 404.9: For the distance limitation through an *atrium* space.

Section 407.4: For the distance limitation in Group I-2.

Sections 408.6.1 and 408.8.1: For the distance limitations in Group I-3.

Section 411.4: For the distance limitation in special amusement buildings.

Section 1015.4: For the distance limitation in refrigeration machinery rooms.

Section 1015.5: For the distance limitation in refrigerated rooms and spaces.

Section 1021.2: For buildings with one *exit*.

Section 1028.7: For increased limitation in assembly seating.

Section 1028.7: For increased limitation for assembly open-air seating.

((~~Section 3103.4: For temporary structures.~~))

Section 3104.9: For pedestrian walkways.

b. Buildings equipped throughout with an *automatic sprinkler system* in accordance with Section 903.3.1.1 or 903.3.1.2. See Section 903 for occupancies where *automatic sprinkler systems* are permitted in accordance with Section 903.3.1.2.

c. Buildings equipped throughout with an *automatic sprinkler system* in accordance with Section 903.3.1.1.

***

SECTION 1018

CORRIDORS

1018.1 Construction. *Corridors* shall be fire-resistance rated in accordance with Table 1018.1. The *corridor* walls required to be fire-resistance rated shall comply with Section 708 for *fire partitions*.

Exceptions:

1. A *fire-resistance rating* is not required for *corridors* in an occupancy in Group E where each room that is used for instruction has at least one door opening directly to the exterior and rooms for assembly purposes have at least one-half of the required *means of egress* doors opening directly to the exterior. Exterior doors specified in this exception are required to be at ground level.
2. A *fire-resistance rating* is not required for *corridors* contained within a dwelling or sleeping unit in an occupancy in Group R.
3. A *fire-resistance rating* is not required for *corridors* in *open parking garages*.
4. A *fire-resistance rating* is not required for *corridors* in an occupancy in Group B which is a space requiring only a single *means of egress* complying with Section 1015.1.
5. *Corridors* adjacent to the *exterior walls* of buildings shall be permitted to have unprotected openings on unrated *exterior walls* where unrated walls are permitted by Table 602 and unprotected openings are permitted by Table 705.8.
6. <u>In office areas located in buildings of Types IA or IB construction, corridor walls need not be of fire-resistance-rated construction where the corridor side of the corridor walls is finished with materials having a maximum Class B rating as defined in Chapter 8. This exception does not apply to outpatient clinics and medical offices.</u>
7. <u>The occupant load of Group B conference rooms, lunch rooms without grease-producing cooking and other assembly rooms with an occupant load of less than 50 in each room need not be considered when determining whether corridor construction is required, provided</u>

such rooms are accessory to an office tenant located in a building of Type IA or IB construction. This provision is permitted to be used in other construction types when the floor on which the assembly room is located is equipped with an automatic sprinkler system.

TABLE 1018.1
CORRIDOR FIRE-RESISTANCE RATING

OCCUPANCY	OCCUPANT LOAD SERVED BY CORRIDOR	REQUIRED FIRE-RESISTANCE RATING (hours)	
		Without sprinkler system	With sprinkler system[c]
H-1, H-2, H-3	All	Not Permitted	1
H-4, H-5	Greater than 30	Not Permitted	1
A, B, E, F, M, S, U	Greater than 30	1	0
R	((~~Greater than 10~~)) All	Not Permitted	((~~0.5~~)) 1
I-2a, I-4	All	Not Permitted	0
I-1, I-3	All	Not Permitted	1[b]

a. For requirements for occupancies in Group I-2, see Sections 407.2 and 407.3.

b. For a reduction in the *fire-resistance rating* for occupancies in Group I-3, see Section 408.8.

c. Buildings equipped throughout with an *automatic sprinkler system* in accordance with Section 903.3.1.1 or 903.3.1.2 where allowed.

***

1018.4 Dead ends. Where more than one *exit* or *exit access doorway* is required, the *exit access* shall be arranged such that there are no dead ends in *corridors* more than ((~~20 feet (6096 mm)~~)) 25 feet (7620 mm) in length.

Exceptions:

1. In occupancies in Group I-3 of Occupancy Condition 2, 3 or 4 (see Section 308.5), the dead end in a *corridor* shall not exceed 50 feet (15 240 mm).

2. In occupancies in Groups B, E, F, I-1, M, R-1, R-2, ((~~R-4,~~)) S and U, where the building is equipped throughout with an *automatic sprinkler system* in accordance with Section 903.3.1.1, the length of the dead-end *corridors* shall not exceed 50 feet (15 240 mm).
3. A dead-end *corridor* shall not be limited in length where the length of the dead-end *corridor* is less than 2.5 times the least width of the dead-end *corridor*.
4. Dead ends are permitted to be 75 feet (22 860 mm) in length in areas containing Group B offices in buildings of Types IA and IB construction, where the cumulative occupant load does not exceed 50 for all areas for which the dead end serves as the only means of egress.

1018.5 Air movement in corridors. *Corridors* shall not serve as supply, return, exhaust, relief or ventilation air ducts or plenums except as allowed by Mechanical Code Section 601.2.

((~~**Exceptions:**~~

~~1. Use of a *corridor* as a source of makeup air for exhaust systems in rooms that open directly onto such *corridors*, including toilet rooms, bathrooms, dressing rooms, smoking lounges and janitor closets, shall be permitted, provided that each such *corridor* is directly supplied with outdoor air at a rate greater than the rate of makeup air taken from the *corridor*.~~

~~2. Where located within a dwelling unit, the use of *corridors* for conveying return air shall not be prohibited.~~

~~3. Where located within tenant spaces of 1,000 square feet (93 m^2) or less in area, utilization of *corridors* for conveying return air is permitted.~~

~~4. Incidental air movement from pressurized rooms within health care facilities, provided that the *corridor* is not the primary source of supply or return to the room.~~))

1018.5.1 Corridor ceiling. Use of the space between the *corridor* ceiling and the floor or roof structure above as a return air plenum is permitted for one or more of the following conditions:

1. The *corridor* is not required to be of fire-resistance rated construction;
2. The *corridor* is separated from the plenum by fire-resistance-rated construction;
3. The air-handling system serving the *corridor* is shut down upon activation of the air-handling unit *smoke detectors* required by the *International Mechanical Code*;
4. The air-handling system serving the *corridor* is shut down upon detection of sprinkler waterflow where the building is equipped throughout with an *automatic sprinkler system*; or
5. The space between the *corridor* ceiling and the floor or roof structure above the *corridor* is used as a component of an *approved* engineered smoke control system.

[W] 1018.6 Corridor continuity. Fire-resistance-rated *corridors* shall be continuous from the point of entry to an *exit*, and shall not be interrupted by intervening rooms. Where the path of egress travel within a fire-resistance-rated *corridor* to the *exit* includes travel along unenclosed *exit access stairways* or *ramps*, the *fire resistance-rating* shall be continuous for the length of the *stairway* or *ramp* and for the length of the connecting *corridor* on the adjacent floor leading to the *exit*.

Exceptions:

1. Foyers, lobbies or reception rooms constructed as required for *corridors* shall not be construed as intervening rooms.

2. In Group R-2 boarding homes and residential treatment facilities licensed by Washington state, seating areas shall be allowed to be open to the corridor provided:

2.1 The seating area is constructed as required for the corridor;

2.2 The floor is separated into at least two compartments complying with Section 407.5;

2.3 Each individual seating area does not exceed 150 square feet (13.9 m^2), excluding the corridor width;

2.4 The combined total space of seating areas per compartment does not exceed 300 square feet, excluding the corridor width;

2.5 Combustible furnishings located within the seating area shall be in accordance with *International Fire Code* Section 805; and

2.6 Emergency means of egress lighting is provided as required by Section 1006 to illuminate the area.

SECTION 1019

EGRESS BALCONIES

***

1019.2 Wall separation. Exterior egress balconies shall be separated from the interior of the building by walls and opening protectives as required for *corridors*.

Exceptions:

1. Separation is not required where the exterior egress balcony is served by at least two *stairs* and a dead end travel condition does not require travel past an unprotected opening to reach a *stair*.

2. Separation is not required in buildings equipped throughout with an automatic sprinkler system in accordance with Section 903.3.1.1 or 903.3.1.2.

***

1019.4 Location. Exterior egress balconies shall have a minimum fire separation distance of 10 feet (3048 mm) measured at right angles from the exterior edge of the egress balcony to:

1. ((~~a~~))Adjacent lot lines; ((~~and from other~~))

2. Other portions of the building;

3. Other buildings on the same lot unless the adjacent building exterior walls and openings are protected in accordance with Section 705 based on fire separation distance.

For the purpose of this section, other portions of the building shall be treated as separate buildings.

***

SECTION 1021

NUMBER OF EXITS AND EXIT CONFIGURATION

***

1021.2 Exits from stories. Two *exits*, or *exit access stairways* or *ramps* providing access to *exits*, from any story or occupied roof shall be provided where one of the following conditions exists:

1. The *occupant load* or number of *dwelling units* exceeds one of the values in Table 1021.2(1) or 1021.2(2).

2. The *exit access* travel distance exceeds that specified in Table 1021.2(1) or 1021.2(2) as determined in accordance with the provisions of Section 1016.1.

3. *Helistop* landing areas located on buildings or structures shall be provided with two *exits*, or *exit access stairways* or *ramps* providing access to exits.

Exceptions:

1. Rooms, areas and spaces complying with Section 1015.1 with *exits* that discharge directly to the exterior at the *level of exit discharge*, are permitted to have one *exit*.
2. Group R-3 occupancy buildings other than boarding houses shall be permitted to have one *exit*.
3. Parking garages where vehicles are mechanically parked shall be permitted to have one *exit*.
4. Air traffic control towers shall be provided with the minimum number of *exits* specified in Section 412.3.
5. Individual *dwelling units* in compliance with Section 1021.2.3.

((6. ~~Group R-3 and R-4 congregate residences shall be permitted to have one *exit*.~~))

7. *Exits* serving specific spaces or areas need not be accessed by the remainder of the story when all of the following are met:

7.1. The number of *exits* from the entire story complies with Section 1021.2.4;

7.2 . The access to *exits* from each individual space in the story complies with Section 1015.1; and

7.3 . All spaces within each portion of a story shall have access to the minimum number of *approved* independent *exits* based on the *occupant loa*d of that portion of the story, but not less than two exits.

Note: In high-rise buildings required to have an additional exit stairway by Section 403.5.2, all exit stairways must be accessible to all tenants on a floor without having to pass through another tenant space.

8. Occupied roofs with an occupant load of ten or less are permitted to have one exit.

9. Not more than 5 stories of Group R-2 occupancy are permitted to be served by a single exit under the following conditions:

9.1 The building has not more than six stories above grade plane.

9.2 The building does not contain a boarding house.

9.3 There shall be no more than four dwelling units on any floor.

9.4 The building shall be of not less than one-hour fire-resistive construction and shall also be equipped throughout with an automatic sprinkler system in accordance with Section 903.3.1.1. Residential-type sprinklers shall be used in all habitable spaces in each dwelling unit.

9.5 There shall be no more than two single exit stairway conditions on the same property.

9.6 An exterior stairway or interior exit stairway shall be provided. The interior exit stairway, including any related exit passageway, shall be pressurized in accordance with Section 909.20. Doors in the stairway shall swing into the

interior exit stairway regardless of the occupant load served, provided that doors from the interior exit stairway to the building exterior are permitted to swing in the direction of exit travel.

9.7 A corridor shall separate each dwelling unit entry/exit door from the door to an interior exit stairway, including any related exit passageway, on each floor. Dwelling unit doors shall not open directly into an interior exit stairway. Dwelling unit doors are permitted to open directly into an exterior stairway.

9.8 There shall be no more than 20 feet (6096 mm) of travel to the exit stairway from the entry/exit door of any dwelling unit.

9.9 Travel distance measured in accordance with Section 1016 shall not exceed 125 feet.

9.10 The exit shall not terminate in an egress court where the court depth exceeds the court width unless it is possible to exit in either direction to the public way.

9.11 Elevators shall be pressurized in accordance with Section 909.21 or shall open into elevator lobbies that comply with Section 713.14.1. Where approved by the building official, natural ventilation is permitted to be substituted for pressurization where the ventilation would prevent the accumulation of smoke or toxic gases.

9.12 Other occupancies are permitted in the same building provided they comply with all the requirements of this code. Other occupancies shall not communicate with the Group R occupancy portion of the building or with the single-exit stairway.

Exception: Parking garages accessory to the Group R occupancy are permitted to communicate with the exit stairway.

9.13 The exit serving the Group R occupancy shall not discharge through any other occupancy, including an accessory parking garage.

9.14 There shall be no openings within 10 feet (3048 mm) of unprotected openings into the stairway other than required exit doors having a one-hour fire-resistance rating.

1021.2.1 Mixed occupancies. Where one *exit*, or *exit access stairway* or *ramp* providing access to *exits* at other stories, is permitted to serve individual stories, mixed occupancies shall be permitted to be served by single *exits* provided each individual occupancy complies with the applicable requirements of Table 1021.2(1) or Table 1021.2(2) for that occupancy. Where applicable, cumulative *occupant loads* from adjacent occupancies shall be considered in accordance with the provisions of Section 1004.1.

In each story of a mixed occupancy building, the maximum number of occupants served by a single *exit* shall be such that the sum of the ratios of the calculated number of occupants of the space divided by the allowable number of occupants for each occupancy does not exceed one. Where dwelling units are located on a story with other occupancies, the actual number of dwelling units divided by 4 plus the ratio from the other occupancy shall not exceed one.

1021.2.2 Basements. A basement provided with one *exit* shall not be located more than one story below *grade plane*.

1021.2.3 Single-story or multiple-story dwelling units. Individual single-story or multiple-story *dwelling units* shall be permitted to have a single *exit* within and from the *dwelling unit* provided that all of the following criteria are met:

1. The *dwelling unit* complies with Section 1015.1 as a space with one *means of egress* and
2. Either the *exit* from the *dwelling unit* discharges directly to the exterior at the *level of exit discharge*, or the *exit access* outside the dwelling unit's entrance door provides access to not less than two *approved* independent *exits*.

TABLE 1021.2(1)
STORIES WITH ONE EXIT OR ACCESS TO ONE EXIT FOR R-2 OCCUPANCIES

STORY	OCCUPANCY	MAXIMUM NUMBER OF DWELLING UNITS	MAXIMUM EXIT ACCESS TRAVEL DISTANCE
Basement, first, second or third story	R-2[a, b]	4 dwelling units	125 feet
Fourth story and above	NP	NA	NA

For SI: 1 foot = 304.8 mm.
NP – Not Permitted

NA – Not Applicable

a. Buildings classified as Group R-2 equipped throughout with an *automatic sprinkler system* in accordance with Section 903.3.1.1 or 903.3.1.2 and provided with *emergency escape and rescue openings* in accordance with Section 1029.

b. This table is used for R-2 occupancies consisting of *dwelling units*. For R-2 occupancies consisting of *sleeping units*, use Table 1021.2(2).

TABLE 1021.2(2)
STORIES WITH ONE EXIT OR ACCESS TO ONE EXIT FOR OTHER OCCUPANCIES

STORY	OCCUPANCY	MAXIMUM OCCUPANTS PER STORY	MAXIMUM EXIT ACCESS TRAVEL DISTANCE
First story or basement	A, B[b], E, F[b], M, U, S[b]	49 occupants	75 feet
	H-2, H-3	3 occupants	25 feet
	H-4, H-5, I, R-1, R-2[a,c]((~~, R-4~~))	10 occupants	75 feet
	S	29 occupants	100 feet
Second story	B, F, M, S	29 occupants	75 feet
Third story and above	NP	NA	NA

For SI: 1 foot = 304.8 mm.
NP – Not Permitted

NA – Not Applicable

a. Buildings classified as Group R-2 equipped throughout with an *automatic sprinkler system* in accordance with Section 903.3.1.1 or 903.3.1.2 and provided with *emergency escape and rescue openings* in accordance with Section 1029.

b. Group B, F and S occupancies in buildings equipped throughout with an *automatic sprinkler system* in accordance with Section 903.3.1.1 shall have a maximum travel distance of 100 feet.

c. This table is used for R-2 occupancies consisting of *sleeping units*. For R-2 occupancies consisting of *dwelling units*, use Table 1021.2(1).

1021.2.4 Three or more exits. Three *exits*, or *exit access stairways* or *ramps* providing access to *exits* at other stories, shall be provided from any story or occupied roof with an *occupant load* from 501 to and including 1,000. Four *exits*, or *exit access stairways* or *ramps* providing access to *exits* at other stories, shall be provided from any story or occupied roof with an *occupant load* greater than 1,000.

1021.2.5 Additional exits. In buildings over 420 feet (128 m) in height, additional *exits* shall be provided in accordance with Section 403.5.2.

1021.3 Exit configuration. *Exits*, or *exit access stairways* or *ramps* providing access to *exits* at other stories, shall be arranged in accordance with the provisions of Sections 1015.2 through 1015.2.2. *Exits* shall be continuous from the point of entry into the *exit* to the *exit discharge*.

1021.3.1 Access to exits at adjacent levels. Access to *exits* at other levels shall be by *stairways* or *ramps*. Where access to *exits* occurs from adjacent building levels, the horizontal and vertical *exit access* travel distance to the closest *exit* shall not exceed that specified in Section 1016.1. ((~~Access to *exits* at other levels shall be from an adjacent story.~~)) The path of egress travel to an exit shall not pass through more than one adjacent story.

Exception: Landing platforms or roof areas for *helistops* that are less than 60 feet (18 288 mm) long, or less than 2,000 square feet (186 m^2) in area, shall be permitted to access the second *exit* by a fire escape, *alternating tread devic*e or ladder leading to the story or level below.

***

SECTION 1022

INTERIOR EXIT STAIRWAYS AND RAMPS

1022.1 General. *Interior exit stairways* and *interior exit ramps* serving as an *exit* component in a *means of egress* system shall comply with the requirements of this section. *Interior exit stairways* and *ramps* shall be enclosed and lead directly to the exterior of the building or shall be extended to the exterior of the building with an *exit passageway* conforming to the requirements of Section 1023, except as permitted in Section 1027.1. An *interior exit stairway* or *ramp* shall not be used for any purpose other than as a *means of egress*, circulation and access.

1022.2 Construction. Enclosures for *interior exit stairways* and ramps shall be constructed as *fire barriers* in accordance with Section 707 or *horizontal assemblies* constructed in accordance with Section 711, or both. *Interior exit stairway* and *ramp* enclosures shall have a *fire-resistance rating* of not less than 2 hours where connecting more than four stories ((~~or more~~)) and not less than 1 hour where connecting ((~~less than~~)) four stories and less. The number of stories connected by the *interior exit stairways* or *ramps* shall include any basements, but not any *mezzanines*. *Interior exit stairways* and *ramps* shall have a *fire-resistance rating* not less than the floor assembly penetrated, but need not exceed 2 hours.

Exception: *Interior exit stairways* and *ramps* in Group I-3 occupancies in accordance with the provisions of Section 408.3.8.

1022.3 Termination. *Interior exit stairways* and *ramps* shall terminate at an *exit discharge* or a *public way*.

Exception: *Interior exit stairways* and *ramps* shall be permitted to terminate at an *exit passageway* complying with Section 1023, provided the *exit passageway* terminates at an *exit discharge* or a *public way*.

1022.3.1 Extension. Where *interior exit stairways* and *ramps* are extended to an *exit discharge* or a *public way* by an *exit passageway*, the *interior exit stairway* and *ramp* shall be separated from the *exit passageway* by a *fire barrier* constructed in accordance with Section 707 or a *horizontal assembly* constructed in accordance with Section 711, or both. The *fire-resistance rating* shall be at least equal to that required for the *interior exit stairway* and *ramp*. A *fire door* assembly complying with Section 716.5 shall be installed in the *fire barrier* to

provide a *means of egress* from the *interior exit stairwa*y and *ramp* to the *exit passageway*. Openings in the *fire barrier* other than the *fire door* assembly are prohibited. Penetrations of the *fire barrier* are prohibited.

Exceptions:

1. Penetrations of the *fire barrier* in accordance with Section 1022.5 shall be permitted.

2. A fire barrier and fire door assembly are not required to separate an exit passageway from a pressurized stairway.

1022.4 Openings. *Interior exit stairway* and *ramp* opening protectives shall be in accordance with the requirements of Section 716.

Openings in *interior exit stairways* and *ramps* other than unprotected exterior openings shall be limited to those necessary for *exit access* to the enclosure from normally occupied spaces and for egress from the enclosure.

Elevators shall not open into *interior exit stairways* and *ramps*.

Interpretation I1022.4: Accessory rooms such as restrooms, storage closets, laundry rooms, electrical, communication closets and similar spaces shall not open into an interior exit stairway.

1022.5 Penetrations. Penetrations into and openings through *interior exit stairways* and *ramps* are prohibited except for the following:

1. required *exit* doors,

2. equipment and ductwork necessary for independent ventilation or pressurization,

3. sprinkler piping,

4. standpipes,

5. electrical raceway for fire department communication systems and sprinkler monitoring terminating at a steel box not exceeding 16 square inches (0.010 m^2),

6. electrical raceway serving the *interior exit stairway* and *ramp* and terminating at a steel box not exceeding 16 square inches (0.010 m^2).

7. piping used exclusively for the drainage of rainfall runoff from roof areas, provided the roof is not used for a helistop or heliport.

8. unfired unit heaters required for freeze protection of fire protection equipment are permitted to penetrate one membrane; the conduit serving the heater is permitted to penetrate both membranes.

9. equipment necessary for electrically-controlled stairway door locks and security cameras are permitted to penetrate one membrane; the conduit serving the equipment is permitted to penetrate both membranes.

Such penetrations shall be protected in accordance with Section 714. There shall be no penetrations or communicating openings, whether protected or not, between adjacent *interior exit stairways* and *ramps*.

Interpretation I1022.4: Ducts passing through interior exit stairways shall be separated from the stairway by construction having a fire-resistance rating at least equal to the stairway walls. At least one side of the duct enclosure shall abut the interior exit stairway enclosure.

Exception: Membrane penetrations shall be permitted on the outside of the *interior exit stairway* and *ramp*. Such penetrations shall be protected in accordance with Section 714.3.2.

***

1022.9 Stairway identification signs. A sign shall be provided at each floor landing in an *interior exit stairway* and *ramp* connecting more than three stories designating the floor level, the terminus of the top and bottom of the *interior exit stairway* and *ramp* and the identification of the *stair* or *ramp*. The signage shall also state the story of, and the direction to, the *exit discharge* and ((~~the availability of~~)) whether there is roof access from the *interior exit stairway* and *ramp* for the fire department, and whether the roof access is accessed by roof hatch. The sign shall be located 5 feet (1524 mm) above the floor landing in a position that is readily visible when the doors are in the open and closed positions. In addition to the *stairway* identification sign, a floor-level sign in raised characters and Braille complying with ICC A117.1 shall be located at each floor-level landing adjacent to the door leading from the *interior exit stairway* and *ramp* into the *corridor* to identify the floor level.

1022.9.1 Signage requirements. *Stairway* identification signs shall comply with all of the following requirements:

1. The signs shall be a minimum size of 18 inches (457 mm) by 12 inches (305 mm).
2. The letters designating the identification of the *interior exit stairway* and *ramp* shall be a minimum of 1-1/2 inches (38 mm) in height.
3. The number designating the floor level shall be a minimum of 5 inches (127 mm) in height and located in the center of the sign.
4. All other lettering and numbers shall be a minimum of 1 inch (25 mm) in height.

5. Characters and their background shall have a nonglare finish. Characters shall contrast with their background, with either light characters on a dark background or dark characters on a light background.
6. When signs required by Section 1022.9 are installed in the *interior exit stairways* and *ramps* of buildings subject to Section 1024, the signs shall be made of the same materials as required by Section 1024.4.

1022.10 ((~~Smokeproof enclosures and p~~))<u>P</u>ressurized stairways and ramps. Where required by Section 403.5.4 or 405.7.2, *interior exit stairways* and *ramps* shall be ((~~smokeproof enclosures or~~)) pressurized *stairways* or *ramps* in accordance with Section 909.20.

1022.10.1 Termination and extension. A ((~~*smokeproof enclosure* or~~)) pressurized *stairway* shall terminate at an *exit discharge* or a *public way*. The ((~~*smokeproof enclosure* or~~)) pressurized *stairway* shall be permitted to be extended by an *exit passageway* in accordance with Section 1022.3. The *exit passageway* shall be without openings other than ((~~the *fire door* assembly required by Section 1022.3.1 and~~)) those necessary for egress from the *exit passageway*. The *exit passageway* shall be separated from the remainder of the building by 2-hour *fire barriers* constructed in accordance with Section 707 or *horizontal assemblies* constructed in accordance with Section 711, or both. <u>The exit passageway shall be protected and pressurized in the same manner as the pressurized stairway.</u>

Exception((s)):

((~~1. Openings in the *exit passageway* serving a *smokeproof enclosure* are permitted where the *exit passageway* is protected and pressurized in the same manner as the~~

~~*smokeproof enclosure*, and openings are protected as required for access from other floors.~~

~~2. Openings in the *exit passageway* serving a pressurized *stairway* are permitted where the *exit passageway* is protected and pressurized in the same manner as the pressurized *stairway*.~~

~~3. The *fire barrier* separating the smokeproof enclosure or pressurized *stairway* from the *exit passageway* is not required, provided the *exit passageway* is protected and pressurized in the same manner as the *smokeproof enclosure* or pressurized *stairway*.~~))

((~~4. A *smokeproof enclosure* or~~)) A pressurized *stairway* shall be permitted to egress through areas on the *level of exit discharge* or vestibules as permitted by Section 1027.

((~~**1022.10.2 Enclosure access.** Access to the *stairway* within a *smokeproof enclosure* shall be by way of a vestibule or an open exterior balcony.~~

~~**Exception:** Access is not required by way of a vestibule or exterior balcony for *stairways* using the pressurization alternative complying with Section 909.20.5.~~))

1022.11 Equipment in interior exit stairways. Equipment is prohibited in interior exit stairways except for equipment necessary for independent pressurization, lighting of the interior exit stairway, sprinkler piping, standpipes, electrical equipment for fire department communication and sprinkler monitoring, and unit heaters required to protect fire protection equipment from freezing.

SECTION 1023

EXIT PASSAGEWAYS

1023.1 Exit passageway. *Exit passageways* serving as an *exit* component in a *means of egress* system shall comply with the requirements of this section. An *exit passageway* shall not be used for any purpose other than as a *means of egress*, circulation and access.

***

1023.5 Openings and penetrations. *Exit passageway* opening protectives shall be in accordance with the requirements of Section 716.

Except as permitted in Section 402.8.7, openings in *exit passageways* other than exterior openings shall be limited to those necessary for exit access to the *exit passageway* from normally occupied spaces and for egress from the *exit passageway*.

Where an *interior exit stairway* or *ramp* is extended to an *exit discharge* or a *public way* by an *exit passageway*, the *exit passageway* shall also comply with Section 1022.3.1. Elevators shall not open into an *exit passageway*.

Interpretation I1023.5: Accessory rooms such as restrooms, storage closets, laundry rooms, electrical, communication closets and similar spaces shall not open into exit passageways.

Code Alternate CA1023.5: An elevator is permitted to open into an exit passageway when the following conditions are met:

1. A lobby shall separate the elevator from the exit passageway. This is allowed at only one location in the building. The lobby is required whether the elevator hoistway is pressurized or

not.

2. The separation shall be constructed as a fire barrier having a fire-resistive rating and opening protectives as for the exit passageway. The door between the lobby and the exit passageway shall also comply with Section 716.5.3. The door shall have listed gaskets installed at head, jambs and meeting edges. This only applies to the walls common with the exit passageway.

3. The lobby shall have a minimum depth of 36 inches. (Note that areas of refuge may require a larger dimension).

4. An elevator lobby constructed as a smoke partition shall be provided at every floor below the level of the exit passageway served by the elevator. Hoistway pressurization is permitted to be used in lieu of the lobbies on floors below the level of the exit passageway.

5. A door as required by Section 1022.3.1 between an interior exit stairway and the exit passageway shall be provided.

6. An automatic sprinkler system in accordance with Section 903.3.1.1 shall be provided throughout the floor on which the exit passageway is located.

This alternate does not apply to interior exit stairways.

1023.6 Penetrations. Penetrations into and openings through an *exit passageway* are prohibited except for required *exit* doors, equipment and ductwork necessary for independent pressurization, sprinkler piping, standpipes, electrical raceway for fire department communication and electrical raceway serving the *exit passageway* and terminating at a steel box not exceeding 16 square inches ($0.010m^2$). Such penetrations shall be protected in accordance

with Section 714. There shall be no penetrations or communicating openings, whether protected or not, between adjacent *exit passageways*.

Exceptions:

1. Membrane penetrations shall be permitted on the outside of the *exit passageway*. Such penetrations shall be protected in accordance with Section 714.3.2.
2. Unfired unit heaters allowed by Section 1022.11 to be installed in interior exit stairways are permitted to penetrate one membrane. The conduit serving the heater is permitted to penetrate both membranes.

SECTION 1024

LUMINOUS EGRESS PATH MARKINGS

***

1024.2 Markings within exit components. Egress path markings shall be provided in *interior exit stairways*, *interior exit ramps* and *exit passageways*, in accordance with Sections 1024.2.1 through 1024.2.6.

1024.2.1 Steps. A solid and continuous stripe shall be applied to the horizontal leading edge of each step and shall extend for the full length of the step. Outlining stripes shall have a minimum horizontal width of 1 inch (25 mm) and a maximum width of 2 inches (51 mm). The leading edge of the stripe shall be placed at a maximum of 1/2 inch (13 mm) from the leading edge of the step and the stripe shall not overlap the leading edge of the step by not more than 1/2 inch (13 mm) down the vertical face of the step.

Exception: The minimum width of 1 inch (25 mm) shall not apply to outlining stripes listed in accordance with UL 1994.

1024.2.2 Landings. The leading edge of landings shall be marked with a stripe consistent with the dimensional requirements for steps.

1024.2.3 Handrails. All *handrails* and handrail extensions shall be marked with a solid and continuous stripe having a minimum width of 1 inch (25 mm). The stripe shall be placed on the top surface of the *handrail* for the entire length of the *handrail*, including extensions and newel post caps. Where *handrails* or handrail extensions bend or turn corners, the stripe shall not have a gap of more than 4 inches (102 mm).

Exception: The minimum width of 1 inch (25 mm) shall not apply to outlining stripes listed in accordance with UL 1994.

1024.2.4 Perimeter demarcation lines. Stair landings and other floor areas within *interior exit stairways*, *interior exit ramps* and *exit passageways*, with the exception of the sides of steps, shall be provided with solid and continuous demarcation lines on the floor or on the walls or a combination of both. The stripes shall be 1 to 2 inches (25 mm to 51 mm) wide with interruptions not exceeding 4 inches (102 mm).

Exception: The minimum width of 1 inch (25 mm) shall not apply to outlining stripes listed in accordance with UL 1994.

1024.2.4.1 Floor mounted demarcation lines. Perimeter demarcation lines shall be placed within 4 inches (102 mm) of the wall and shall extend to within 2 inches (51 mm)

of the markings on the leading edge of landings. The demarcation lines shall continue across the floor in front of all doors.

Exception: Demarcation lines shall not extend in front of *exit discharge* doors that lead out of an *exit* and through which occupants must travel to complete the exit path.

1024.2.4.2 Wall mounted demarcation lines. Perimeter demarcation lines shall be placed on the wall with the bottom edge of the stripe no more than 4 inches (102 mm) above the finished floor. At the top or bottom of the *stairs*, demarcation lines shall drop vertically to the floor within 2 inches (51 mm) of the step or landing edge. Demarcation lines on walls shall transition vertically to the floor and then extend across the floor where a line on the floor is the only practical method of outlining the path. Where the wall line is broken by a door, demarcation lines on walls shall continue across the face of the door or transition to the floor and extend across the floor in front of such door.

Exception: Demarcation lines shall not extend in front of *exit discharge* doors that lead out of an *exit* and through which occupants must travel to complete the exit path.

1024.2.4.3 Transition. Where a wall mounted demarcation line transitions to a floor mounted demarcation line, or vice-versa, the wall mounted demarcation line shall drop vertically to the floor to meet a complimentary extension of the floor mounted demarcation line, thus forming a continuous marking.

1024.2.5 Obstacles. Obstacles at or below 6 feet 6 inches (1981 mm) in height and projecting more than 4 inches (102 mm) into the egress path shall be outlined with markings no less than 1 inch (25 mm) in width comprised of a pattern of alternating equal bands, of luminescent

luminous material and black, with the alternating bands no more than 2 inches (51 mm) thick and angled at 45 degrees. Obstacles shall include, but are not limited to, standpipes, hose cabinets, wall projections, and restricted height areas. However, such markings shall not conceal any required information or indicators including but not limited to instructions to occupants for the use of standpipes.

1024.2.6 Doors within the exit path. Doors through which occupants must pass in order to complete the exit path shall be provided with markings complying with Sections 1024.2.6.1 through 1024.2.6.3.

Exception: Main exterior *exit* doors or gates that are obviously and clearly identifiable as *exits* need not be provided with markings where *approved* by the *building official.*

1024.2.6.1 Emergency exit symbol. The doors shall be identified by a low-location luminous emergency exit symbol complying with NFPA 170. The exit symbol shall be a minimum of 4 inches (102 mm) in height and shall be mounted on the door, centered horizontally, with the top of the symbol no higher than 18 inches (457 mm) above the finished floor.

1024.2.6.2 Door hardware markings. Door hardware shall be marked with no less than 16 square inches (406 mm^2) of luminous material. This marking shall be located behind, immediately adjacent to, or on the door handle or escutcheon. Where a panic bar is installed, such material shall be no less than 1 inch (25 mm) wide for the entire length of the actuating bar or touchpad.

1024.2.6.3 Door frame markings. The top and sides of the door frame shall be marked with a solid and continuous 1-inch- to 2-inch-wide (25 mm to 51 mm) stripe. Where the door molding does not provide sufficient flat surface on which to locate the stripe, the stripe shall be permitted to be located on the wall surrounding the frame.

***

SECTION 1026

EXTERIOR EXIT STAIRWAYS AND RAMPS

***

1026.3 Open side. *Exterior exit stairways* and *ramps* serving as an element of a required *means of egress* shall be at least 50 percent open on at least one side. An open side shall have a minimum of ((~~35 square feet (3.3 m^2)~~)) 28 square feet (2.6 m^2) of aggregate open area adjacent to each floor level. ((~~and the level of each intermediate landing. The required open area shall be located not less than 42 inches (1067 mm) above the adjacent floor or landing level.~~)) The open area shall be distributed to prevent accumulation of smoke or toxic gases.

***

1026.5 Location. *Exterior exit stairways* and *ramps* shall have a minimum fire separation distance of 10 feet (3048 mm) measured at right angles from the exterior edge of the *stairway* or *ramp*, including landings, to:

1. ((~~a~~))Adjacent lot lines; ((~~and from other~~))
2. Other portions of the building;

3. Other buildings on the same lot unless the adjacent building *exterior walls* and openings are protected in accordance with Section 705 based on *fire separation distance*.

For the purpose of this section other portions of the building shall be treated as separate buildings.

1026.6 Exterior stairway and ramp protection. *Exterior exit stairways* and *ramps* shall be separated from the interior of the building as required in Section 1022.2. Openings shall be limited to those necessary for egress from normally occupied spaces.

Exceptions:

1. Separation from the interior of the building is not required for occupancies, other than those in Group R-1 or R-2, in buildings that are no more than two stories above *grade plane* where a *level of exit discharge* serving such occupancies is the first story above *grade plane*.

2. Separation from the interior of the building is not required where the *exterior stairway* or *ramp* is served by an exterior *ramp* or balcony that connects two remote *exterior stairways* or other *approved exits* with a perimeter that is not less than 50 percent open. To be considered open, the opening shall be a minimum of 50 percent of the height of the enclosing wall, with the top of the openings no less than 7 feet (2134 mm) above the top of the balcony.

3. Separation from the interior of the building is not required for an *exterior stairway* or *ramp* located in a building or structure that is permitted to have unenclosed *exit access stairways* in accordance with Section 1009.3.

4. Separation from the interior of the building is not required for *exterior stairways* or *ramps* connected to open-ended *corridors*, provided that Items 4.1 through 4.5 are met:

4.1. The building, including *corridors*, *stairways* or *ramps*, shall be equipped throughout with an *automatic sprinkler system* in accordance with Section 903.3.1.1 or 903.3.1.2.

4.2. The open-ended *corridors* comply with Section 1018.

4.3. The open-ended *corridors* are connected on each end to an *exterior exit stairway* or *ramp* complying with Section 1026.

4.4. The *exterior walls* and openings adjacent to the *exterior exit stairway* or *ramp* comply with Section 1022.7 <u>and 1026.7</u>.

4.5. At any location in an open-ended *corridor* where a change of direction exceeding 45 degrees (0.79 rad) occurs, a clear opening of not less than 35 square feet (3.3 m2) or an *exterior stairway* or *ramp* shall be provided. Where clear openings are provided, they shall be located so as to minimize the accumulation of smoke or toxic gases.

<u>**1026.7 Exterior exit stairway and ramp exterior walls.** Where nonrated walls or unprotected openings enclose the exterior of the *stairway* and the walls or openings are exposed by other parts of the building at an angle of less than 180 degrees (3.14 rad), the building *exterior walls* within 10 feet (3048 mm) horizontally of a nonrated wall or unprotected opening shall have a *fire-resistance rating* of not less than 1 hour. Openings within such *exterior walls* shall be protected by opening protectives having a *fire protection rating* of not less than 3/4 hour. This</u>

construction shall extend vertically from the ground to a point 10 feet (3048 mm) above the topmost landing of the *stairway* or to the roof line, whichever is lower.

SECTION 1027

EXIT DISCHARGE

1027.1 General. *Exits* shall discharge directly to the exterior of the building. The *exit discharge* shall be at grade or shall provide direct access to grade. The *exit discharge* shall not reenter a building except into an exit or as otherwise approved by the building official. The combined use of Exceptions 1 and 2 shall not exceed 50 percent of the number and capacity of the required exits.

Exceptions:

1. A maximum of 50 percent of the number and capacity of *interior exit stairways* and *ramps* is permitted to egress through areas on the *level of exit discharge* provided all of the following are met:
   - 1.1. Such enclosures egress to a free and unobstructed path of travel to an exterior *exit* door and such *exit* is readily visible and identifiable from the point of termination of the enclosure.
   - 1.2. The entire area of the *level of exit discharge* is separated from areas below by construction conforming to the *fire-resistance rating* for the enclosure.
   - 1.3. The egress path from the *interior exit stairway* and *ramp* on the *level of exit discharge* is protected throughout by an *approved automatic sprinkler system*. All portions of the *level of exit discharge* with access to the egress path shall either be protected

throughout with an *automatic sprinkler system* installed in accordance with Section 903.3.1.1 or 903.3.1.2, or separated from the egress path in accordance with the requirements for the enclosure of *interior exit stairways* or *ramps*.

2. A maximum of 50 percent of the number and capacity of the *interior exit stairways* and *ramps* is permitted to egress through a vestibule provided all of the following are met:

   2.1. The entire area of the vestibule is separated from areas below by construction conforming to the *fire-resistance rating* for the enclosure.

   2.2. The depth from the exterior of the building is not greater than 10 feet (3048 mm) and the length is not greater than 30 feet (9144 mm).

   2.3. The area is separated from the remainder of the *level of exit discharge* by construction providing protection at least the equivalent of *approved* wired glass in steel frames.

   2.4. The area is used only for *means of egress* and *exits* directly to the outside.

3. *Horizontal exits* complying with Section 1025 shall not be required to discharge directly to the exterior of the building.

***

1027.4 Egress courts. *Egress courts* serving as a portion of the *exit discharge* in the *means of egress* system shall comply with the requirements of Section 1027.

1027.4.1 Width. The minimum width of *egress courts* shall be determined as specified in Section 1005.1, but such width shall not be less than 44 inches (1118 mm), except as specified herein. *Egress courts* serving Group R-3 and U occupancies shall not be less than 36 inches

(914 mm) in width. The required width of *egress courts* shall be unobstructed to a height of 7 feet (2134 mm).

Exception: Encroachments complying with Section 1005.7.

Where an *egress court* exceeds the minimum required width and the width of such *egress court* is then reduced along the path of exit travel, the reduction in width shall be gradual. The transition in width shall be affected by a *guard* not less than 36 inches (914 mm) in height and shall not create an angle of more than 30 degrees (0.52 rad) with respect to the axis of the *egress court* along the path of egress travel. In no case shall the width of the *egress court* be less than the required minimum.

Exception: A gradual reduction in width and guard are not required where the width of the egress court at any point is no less than 150% of the required width.

1027.4.2 Construction and openings. Where an *egress court* serving a building or portion thereof is less than 10 feet (3048 mm) in width, the *egress court* walls shall have not less than 1-hour fire-resistance-rated construction for a distance of 10 feet (3048 mm) above the floor of the *court*. Openings within such walls shall be protected by opening protectives having a fire protection rating of not less than 3/4 hour.

Exceptions:

1. *Egress courts* serving an *occupant load* of less than 10.
2. *Egress courts* serving Group R-3.

3. In buildings other than those which have a single means of egress under Section 1021.2 item 9, opening protection need not be provided where it is possible to exit in two directions from the court.

***

SECTION 1028

ASSEMBLY

***

1028.13 Handrails. Ramped *aisles* having a slope exceeding one unit vertical in 15 units horizontal (6.7-percent slope) and *aisle stairs* shall be provided with *handrails* in compliance with Section 1012 located either at one or both sides of the *aisle* or within the *aisle* width.

Exceptions:

1. *Handrails* are not required for ramped *aisles* having a gradient no greater than one unit vertical in eight units horizontal (12.5-percent slope) and seating on both sides.
2. *Handrails* are not required if, at the side of the *aisle*, there is a *guard* that complies with the graspability requirements of *handrails*.
3. Handrail extensions are not required at the top and bottom of *aisle stair* and *aisle ramp* runs to permit crossovers within the *aisles*.

1028.13.1 Discontinuous handrails. Where there is seating on both sides of the *aisle*, the *handrails* shall be discontinuous with gaps or breaks at intervals not exceeding five rows to facilitate access to seating and to permit crossing from one side of the *aisle* to the other. These gaps or breaks shall have a clear width of at least 22 inches (559 mm) and not greater than 36

inches (914 mm), measured horizontally, and the *handrail* shall have rounded terminations or bends.

((~~**1028.13.2 Intermediate handrails.** Where *handrails* are provided in the middle of *aisle stairs*, there shall be an additional intermediate *handrail* located approximately 12 inches (305 mm) below the main *handrail*.~~))

***

Section 12. Chapter 11 of the 2012 International Fire Code is amended as follows:

CHAPTER 11
((~~CONSTRUCTION~~)) REQUIREMENTS FOR EXISTING BUILDINGS

SECTION 1101
GENERAL

1101.1 Scope. The provisions of this chapter ((~~shall~~)) apply to existing buildings constructed prior to the adoption of this code.

1101.2 Intent. The intent of this chapter is to provide a minimum degree of fire and life safety to persons occupying existing buildings by providing minimum ((~~construction~~)) requirements where such existing buildings do not comply with the minimum requirements of the *International Building Code*.

1101.3 Permits. Permits ((~~shall be~~)) <u>are</u> required as set forth in Sections 105.6 and 105.7 and the *International Building Code*.

***

SECTION 1103

FIRE SAFETY REQUIREMENTS

FOR EXISTING BUILDINGS

***

1103.2 Emergency responder radio coverage in existing high rise buildings. Existing high rise buildings that do not have a wired communication system or *approved* radio coverage for emergency responders within the building ((~~based upon the existing coverage levels of the public safety communication systems of the jurisdiction at the exterior of the building,~~)) shall be equipped with such system or coverage ((~~according to one of the following~~)) within two years from the effective date of the adoption of this code.

Exception:

1. ((~~Whenever an existing wired communication system cannot be repaired or is being replaced, or where not *approved* in accordance with Section 510.1, Exception 1.~~)) A wired communication system in accordance with Section 907.2.13.2 may be provided in lieu of an approved radio coverage system.

((~~2. Within a time frame established by the adopting authority.~~

~~**Exception:** Where it is determined by the *fire code official* that the radio coverage system is not needed.~~))

***

1103.4.3 More than five stories. In other than Group I occupancies, interior vertical openings connecting more than five stories shall be protected by 1-hour fire-resistance-rated construction.

Exceptions:

1. Vertical opening protection is not required for Group R-3 occupancies.
2. Vertical opening protection is not required for open parking garages and *ramps*.
3. Vertical opening protection for escalators shall be in accordance with Section 1103.4.5, 1103.4.6 or 1103.4.7.
4. Vertical opening protection is not required for *stairways* that are not a portion of the required *means of egress* constructed in accordance with the Seattle Building Code in effect at the time of construction.

***

1103.5 Sprinkler systems. An *automatic sprinkler system* shall be provided in existing buildings in accordance with Sections 1103.5.1 and 1103.5.((~~2~~))3.

1103.5.1 Pyroxylin plastics. An *automatic sprinkler system* shall be provided throughout existing buildings where cellulose nitrate film or pyroxylin plastics are manufactured, stored or handled in quantities exceeding 100 pounds (45 kg). Vaults located within buildings for the storage of raw pyroxylin shall be protected with an *approved automatic sprinkler system* capable of discharging 1.66 gallons per minute per square foot (68 L/min/m^2) over the area of the vault.

1103.5.2 Group I-2. An *automatic sprinkler system* shall be provided throughout existing Group I-2 fire areas. The sprinkler system shall be provided throughout the floor where the Group I-2 occupancy is located, and in all floors between the Group I-2 occupancy and the *level of exit discharge*.

[W] 1103.5.3 Nightclub. An *automatic sprinkler system* shall be provided throughout A-2 *nightclubs* as defined in this code. No building shall be constructed for, used for, or converted to occupancy as a *nightclub* except in accordance with this section.

***

1103.7 Fire alarm systems. An *approved* fire alarm system shall be installed in existing buildings and structures in accordance with Sections 1103.7.1 through 1103.7.6((~~7~~)) and provide occupant notification in accordance with Section 907.6 unless other requirements are provided by other sections of this code.

Exception: Non-residential ((~~O~~)) occupancies with an existing, previously *approved* fire alarm system, and residential occupancies with a fire alarm system capable of achieving a minimum sound level in the sleeping rooms of 60 dBa or 15 dBa above ambient noise level, whichever is higher.

***

[W]((~~1103.7.7 Group R-4.~~ ~~A manual fire alarm system that activates the occupant notification system in accordance with Section 907.6 shall be installed in existing Group R-4 residential care/assisted living facilities in accordance with Section 907.2.10.1.~~

~~**Exceptions:**~~

~~1. Where there are interconnected smoke alarms meeting the requirements of Section 907.2.11 and there is at least one manual fire alarm box per floor arranged to continuously sound the smoke alarms.~~

2. ~~Other manually activated, continuously sounding alarms *approved* by the *fire code official*.~~))

***

[W] 1103.9 Carbon monoxide alarms. Existing Group I or R occupancies ((~~located in a building containing a fuel-burning appliance or a building which has an attached garage~~)) shall be equipped with single-station carbon monoxide alarms in accordance with section 908.7. The carbon monoxide alarms shall be *listed* as complying with UL 2034, and be installed and maintained in accordance with NFPA 720 and the manufacturer's instructions. ((~~An open parking garage, as defined in the *International Building Code*, or an enclosed parking garage ventilated in accordance with Section 404 of the *International Mechanical Code* shall not be deemed to be an attached garage.~~))

Exceptions.

1. For other than R-2 occupancies, if the building does not contain a fuel-burning appliance, a fuel-burning fireplace, or an attached garage.
2. *Sleeping units* or *dwelling units* in I and R-1 occupancies and R-2 college dormitories, hotel, and DSHS licensed boarding home and residential treatment facility occupancies which do not contain a fuel-burning appliance, a fuel-burning fireplace, or have an attached garage, provided that:
    a) The *sleeping units* or *dwelling unit* is not adjacent to any room which contains a fuel-burning appliance, a fuel-burning fireplace, or an attached garage; and

b) The *sleeping units* or *dwelling unit* is not connected by duct work or ventilation shafts with a supply or return register in the same room to any room containing a fuel-burning appliance, a fuel-burning fireplace, or to an attached garage; and

c) The building is provided with a common area carbon monoxide detection system.

3. An open parking garage, as defined in the *International Building Code*, or enclosed parking garage ventilated in accordance with Section 404 of the *International Mechanical Code* is not considered an attached garage.

((~~**Exception:** *Sleeping units* or *dwelling units* which do not themselves contain a fuel-burning appliance or have an attached garage, but which are located in a building with a fuel-burning appliance or an attached garage, need not be equipped with single-station carbon monoxide alarms provided that:~~

~~1. The *sleeping unit* or *dwelling unit* is located more than one story above or below any story that contains a fuel-burning appliance or an attached garage;~~

~~2. The *sleeping unit* or *dwelling unit* is not connected by duct work or ventilation shafts to any room containing a fuel-burning appliance or to an attached garage; and~~

~~3. The building is provided with a common area carbon monoxide alarm system.~~))

SECTION 1104

MEANS OF EGRESS FOR EXISTING BUILDINGS

[W]1104.1 General. *Means of egress* in existing buildings shall comply with Section 1030 and Sections 1104.2 through 1104.24. ((~~the minimum egress requirements when specified in Table 1103.1 as further enumerated in Sections 1104.2 through 1104.23, and the building code that applied at the time of construction. Where the provisions of this chapter conflict with the building code that applied at the time of construction, the most restrictive provision shall apply. Existing buildings that were not required to comply with a building code at the time of construction shall comply with the minimum *egress* requirements when specified in Table 1103.1 as further enumerated in Sections 1104.2 through 1104.24.~~))

Exception: *Means of egress* conforming to the requirements of the building code under which they were constructed and Section 1030 shall not be required to comply with 1104.2 through 1104.22 and 1104.24.

***

1104.5 Illumination emergency power. The power supply for *means of egress* illumination shall normally be provided by the premises' electrical supply. In the event of power supply failure, illumination shall be automatically provided from an emergency system for the following occupancies where such occupancies require two or more *means of egress*:

1. Group A having 50 or more occupants.

   Exception: Assembly occupancies used exclusively as a place of worship and having an *occupant load* of less than 300.

2. Group B buildings three or more stories in height, buildings with 100 or more occupants above or below a *level of exit discharge* serving the occupants or buildings with 1,000 or more total occupants.
3. Group E in interior *stairs*, *corridors*, windowless areas with student occupancy, shops and laboratories.
4. Group F having more than 100 occupants.

   Exception: Buildings used only during daylight hours which are provided with windows for natural light in accordance with the *International Building Code*.
5. Group I.
6. Group M.

   Exception: Buildings less than 3,000 square feet (279 m2) in gross sales area on one story only, excluding mezzanines.
7. Group R-1.

   Exception: Where each *sleeping unit* has direct access to the outside of the building at grade.
8. Group R-2.

   Exception: Where each *dwelling unit* or *sleeping unit* has direct access to the outside of the building at grade.

~~9.~~ **[W]** ((~~Group R-4.~~

~~**Exception:** Where each *sleeping unit* has direct access to the outside of the building at ground level~~.))

***

Section 13. Chapter 22 of the 2012 International Fire Code is amended as follows:

CHAPTER 22

COMBUSTIBLE DUST PRODUCING OPERATIONS

SECTION 2201

SCOPE

2201.1 Scope. The equipment, processes and operations involving dust explosion hazards shall comply with the provisions of this chapter.

Exception: Equipment or machinery located inside buildings that emit dust but are used on an intermittent basis, including, but not limited to, model shops, research and development facilities, hobby, and other non-production uses, shall be provided with a local, point of use dust collection system. The dust collector can be a portable type with high efficiency filters to allow exhaust air to be discharged back into the space. Such collectors are not required to be provided with an approved explosion-control system. Such systems shall be limited to no more than 1,500 cfm.

***

Section 14. Chapter 23 of the 2012 International Fire Code is amended as follows:

CHAPTER 23

MOTOR FUEL-DISPENSING FACILITIES AND REPAIR GARAGES

SECTION 2301

GENERAL

2301.1 Scope. Automotive motor fuel-dispensing facilities, marine motor fuel-dispensing facilities, fleet vehicle motor fuel-dispensing facilities, aircraft motor-vehicle fuel-dispensing facilities and repair garages shall be in accordance with this chapter and the *International Building Code*, *International Fuel Gas Code* and *International Mechanical Code*. Such operations shall include both those that are accessible to the public and private operations.

2301.1. Point of Information

For provisions relating to the transfer of flammable and combustible liquids directly from tank vehicles into the fuel tanks of motor vehicles located at commercial, industrial,

***

SECTION 2302

DEFINITIONS

2302.1 Definitions. The following terms are defined in Chapter 2:

AIRCRAFT MOTOR-VEHICLE FUEL-DISPENING FACILITY.

ALCOHOL-BLENDED FUELS.

AUTOMOTIVE MOTOR FUEL-DISPENSING FACILITY.

DISPENSING DEVICE, OVERHEAD TYPE.

FLEET VEHICLE MOTOR FUEL-DISPENSING FACILITY.

FIRE DISTRICT.

LIQUEFIED NATURAL GAS (LNG).

MARINE MOTOR FUEL-DISPENSING FACILITY.

REPAIR GARAGE.

SELF-SERVICE MOTOR FUEL-DISPENSING FACILITY.

***

SECTION 2303

LOCATION OF DISPENSING DEVICES

***

2303.2 Emergency disconnect switches. An *approved*, clearly identified and readily accessible emergency disconnect switch shall be provided at an *approved* location to stop the transfer of fuel to the fuel dispensers in the event of a fuel spill or other emergency. An emergency disconnect switch for exterior fuel dispensers shall be located within 100 feet (30 480 mm) of, but not less than 20 feet (6096 mm) from, the fuel dispensers. For interior fuel-dispensing operations, the emergency disconnect switch shall be installed at an *approved* location. Such devices shall be distinctly *labeled* as: EMERGENCY FUEL SHUTOFF. Signs shall be provided in *approved* locations, and letters shall not be less than 3 inches (76.2 mm) in height and ½ inch (12.7) in stroke.

***

SECTION 2304

DISPENSING OPERATIONS

***

2304.4.1 Approved containers required. Class I, II and IIIA liquids shall not be dispensed into a portable container unless such container does not exceed a 6-gallon (23.7 L) capacity, is *listed* or of *approved* material and construction, and has a tight closure with a screwed or spring-loaded cover so designed that the contents can be dispensed without spilling. Liquids shall not be dispensed into portable or cargo tanks.

It is unlawful to sell, offer for sale or distribute any container for the storage and/or handling of flammable liquids, unless such container has been approved for such purpose under applicable provisions of this code.

***

SECTION 2306

FLAMMABLE AND COMBUSTIBLE LIQUID MOTOR FULE-DISPENSING FACILITIES

***

2306.2.3 Above-ground tanks located outside, above grade. Above-ground tanks shall not be used for the storage of Class I, II or III liquid motor fuels, except as provided by this section.

1. Above-ground tanks used for outside, above-grade storage of Class I liquids shall be *listed* and *labeled* as protected above-ground tanks in accordance with UL 2085 and shall be in accordance with Chapter 57. Such tanks shall be located in accordance with Table 2306.2.3, and are only allowed to be located outside the *fire district* in industrial zones as defined in the *Seattle Land Use Code*.

2. Above-ground tanks used for outside, above-grade storage of Class II or IIIA liquids shall be *listed* and *labeled* as protected above-ground tanks in accordance with UL 2085 and shall be installed in accordance with Chapter 57. Tank locations shall be in accordance with Table 2306.2.3.

   Exception: Other above-ground tanks that comply with Chapter 57 where *approved* by the *fire code official*.

3. Tanks containing fuels shall not exceed 12,000 gallons (45 420 L) in individual capacity or 12,000 ((~~48,000~~)) gallons (181 680 L) in aggregate capacity. Installations with the maximum allowable aggregate capacity shall be separated from other such installations by not less than 100 feet (30 480 mm).

   Exception: Tanks containing Class II or IIIA liquid fuels are allowed up to a maximum aggregate capacity of 48,000 gallons (181 680 L) with a maximum aggregate capacity of all flammable and combustible liquids in above-ground tanks of 48,000 gallons (181 680 L).

***

2306.2.4 Above-ground tanks located in above-grade vaults or below-grade vaults. Above-ground tanks used for storage of Class I, II or IIIA liquid motor fuels are allowed to be installed in vaults located above grade or below grade in accordance with Section 5704.2.8 and shall comply with Sections 2306.2.4.1 and 2306.2.4.2. Tanks in above-grade vaults shall also comply with Table 2306.2.3.

2306.2.4.1 Tank capacity limits. Tanks storing Class I and Class II liquids at an individual site shall be limited to a maximum individual capacity of ((~~15,000~~)) 12,000 gallons (45 420 L) ((~~56 775 L~~)) and an aggregate capacity of ((~~48,000~~)) 12,000 gallons (45 420 L) ((~~181 680 L~~)).

Exception: Tanks containing Class II or IIIA liquid fuels are allowed up to a maximum aggregate capacity of 48,000 gallons (181 680 L)

***

SECTION 2307

LIQUEFIED PETROLEUM GAS MOTOR FUEL-DISPENSING FACILITIES

2307.1 General. Motor fuel-dispensing facilities for liquefied petroleum gas (LP-gas) fuel shall be in accordance with this section and Chapter 61.

2307.1.1 Prohibited locations: Motor fuel-dispensing facilities for liquefied petroleum gas LP-gas) fuel are prohibited in the *fire district*.

***

SECTION 2308

COMPRESSED NATURAL GAS MOTOR FUEL-DISPENSING FACILITIES

2308.1 General. Motor fuel-dispensing facilities for compressed natural gas (CNG) fuel shall be in accordance with this section and Chapter 53.

2308.1.1 Prohibited locations: Motor fuel-dispensing facilities for compressed natural gas (CNG) fuel are prohibited in the *fire district*.

***

SECTION 2309

HYDROGEN MOTOR FUEL-DISPENSING AND GENERATING FACILTIES

2309.1 General. Hydrogen motor fuel-dispensing and generation facilities shall be in accordance with this section and Chapter 58. Where a fuel-dispensing facility also includes a repair garage, the repair operation shall comply with Section 2311.

2309.1.1 Prohibited locations. Hydrogen motor fuel-dispensing and generation facilities are prohibited in the *fire district*.

***

Section 15. Chapter 24 of the 2012 International Fire Code is amended as follows:

CHAPTER 24

FLAMMABLE FINISHES

SECTION 2401

GENERAL

***

2401.2 Nonapplicability. This chapter ((~~shall~~)) does not apply to spray finishing utilizing flammable or *combustible liquids* ((~~which do not sustain combustion,~~)) including:

1. Liquids which do not sustain combustion that have no fire point when tested in accordance with ASTM D 92.
2. Liquids which do not sustain combustion with a flashpoint greater than 95°F (35°C) in a water-miscible solution or dispersion with a water and inert (noncombustible) solids content of more than 80 percent by weight.
3. Mobile spray coaters registered with, and meeting the requirements of, the Puget Sound Clean Air Agency.

2401.2 Point of Information

Details relating to the Puget Sound Clean Air Agency's (PSCAA) rules and requirements can be obtained online at:

www.pscleanair.org/regulated/mobilespraycoaters/assistance.aspx

or by contacting PSCAA at (206) 434-8800.

***

SECTION 2404

SPRAY FINISHING

***

2404.2 Location of spray-finishing operations. Spray finishing operations conducted in buildings used for Group A, E, I or R occupancies shall be located in a spray room protected with an *approved automatic sprinkler system* installed in accordance with Section 903.3.1.1 and separated vertically and horizontally from other areas in accordance with the *International*

Building Code. In other occupancies, spray-finishing operations shall be conducted in a spray room, spray booth or spraying space *approved* for such use.

Exceptions:

1. Automobile undercoating spray operations and spray-on automotive lining operations conducted in areas with *approved* natural or mechanical ventilation shall be exempt from the provisions of Section 1504 when *approved* and where utilizing Class IIIA or IIIB *combustible liquids*.
2. In buildings other than Group A, E, I or R occupancies, *approved* limited spraying space in accordance with Section 1504.9.
3. Resin application areas used for manufacturing of reinforced plastics complying with Section 1509 shall not be required to be located in a spray room, spray booth or spraying space.

Spray-finishing operations are allowed in basements only if confined to either an *approved* spray booth or an *approved* spray room protected by an *approved* automatic fire sprinkler system and if such basement is protected throughout by an *approved* automatic sprinkler system in accordance with Chapter 9.

***

2404.9.3 Ventilation. Positive mechanical ventilation providing a minimum of six complete air changes per hour shall be installed. Such system shall meet the requirements of this code for handling flammable vapor areas. Explosion venting is not required.

Exception: Negative mechanical ventilation, providing a minimum of six complete air changes per hour, is allowed in lieu of positive mechanical ventilation if a fan rated for Class I, Division 2 hazardous locations in accordance with the Electrical Code is installed.

***

Section 16. Chapter 31 of the 2012 International Fire Code is amended as follows:

CHAPTER 31

TENTS AND OTHER MEMBRANE STRUCTURES

***

SECTION 3103

TEMPORARY TENTS AND MEMBRANE STRUCTURES

***

3103.2 Approval required. Tents and membrane structures having an area in excess of 400 square feet (37 m2) shall not be erected, operated or maintained for any purpose without first obtaining a permit and approval from the *fire code official*.

Exceptions:

1. Tents used exclusively for recreational camping purposes.
2. Tents open on all sides which comply with all of the following:
   2.1 Individual tents having a maximum size of 700 square feet (65 m2).

2.2 The aggregate area of multiple tents placed side by side without a fire break clearance of 12 feet (3658 mm), not exceeding 700 square feet (65 m2) total.

2.3 A minimum clearance of 12 feet (3658 mm) to all structures and other tents.

3. Funeral tents and curtains or extensions attached thereto, when used for funeral services.

***

SECTION 3104

TEMPORARY AND PERMANENT TENST AND MEMBRANE STRUCTURES

***

3104.2 Flame propagation performance treatment. Before a permit is granted, the *owner* or agent shall file with the *fire code official* a certificate executed by an *approved* testing laboratory certifying that the tents and membrane structures and their appurtenances; sidewalls, drops and tarpaulins; floor coverings, bunting and combustible decorative materials and effects, including sawdust when used on floors or passageways, are composed of material meeting the flame propagation performance criteria of NFPA 701, or other *approved* standard, or shall be treated with a flame retardant in an *approved* manner and meet the flame propagation performance criteria of NFPA 701, and that such flame propagation performance criteria are effective for the period specified by the permit.

3104.2 Point of Information

Accepted flame certificates for decorative materials include:

1. Certificates indicating compliance with NFPA 701.
2. Certificates verifying approval through the California State Fire Marshal.
3. Certificates indicating compliance with CPAI-84 (Canvas Products Association International).

Section 17. Chapter 33 of the 2012 International Fire Code is amended as follows:

CHAPTER 33

FIRE SAFETY DURING CONSTRUCTION AND DEMOLOTION

SECTION 3301 GENERAL

***

3301.1 Scope. This chapter shall apply to structures in the course of construction, *alteration* or demolition, including those in underground locations. Compliance with NFPA 241 is required for items not specifically addressed herein.

Construction, *alteration* and demolition of fixed guideway transit and passenger rail systems tunnels shall comply with NFPA 130 as amended and WAC 296-155, Part Q, underground Construction.

3301.1(A) Point of Information

Adopted local amendments to NFPA 130 can be accessed at

http://www.seattle.gov/fire/FMO/firecode/nfpaAmendments.htm

Construction, *alteration* and demolition of road tunnels shall comply shall comply with NFPA 502 as amended and WAC 296-155, Part Q, Underground Construction.

3301.1(B) Point of Information

Adopted local amendments to NFPA 502 can be accessed at

http://www.seattle.gov/fire/FMO/firecode/nfpaAmendments.htm

***

SECTION 3304

PRECAUTIONS AGAINST FIRE

***

3304.6 Hot Work ((~~**Cutting and welding.**~~)) Operations involving hot work ((~~the use of cutting and welding~~)) shall be done in accordance with Chapter 35.

***

Section 18. Chapter 34 of the 2012 International Fire Code is amended as follows:

CHAPTER 34

TIRE REBUILDING AND TIRE STORAGE

***

SECTION 3405

OUTDOOR STORAGE

***

3405.4 Distance from lot lines and buildings. Tire storage piles shall be located at least 50 feet (15 240 mm) from lot lines and buildings.

Exception: When stored on a single rack having dimensions not exceeding 68 inches by 48 inches by 76 inches (1727 mm by 1219 mm by 1930 mm) for commercial display, the

distance to property lines that can be built upon may be reduced to 10 feet (3048 mm) and no separation is required from buildings on the same property.

***

Section19. Chapter 35 of the 2012 International Fire Code is amended as follows:

CHAPTER 35

WELDING AND OTHER HOT WORK

SECTION 3501

GENERAL

***

3501.1 Scope. Welding, cutting, open torches and other hot work operations and equipment shall comply with this chapter.

Exception: Hot work on board marine vessels at dock or under construction or repair shall be in accordance with Administrative Rules 26.01.09, *Cutting, Welding and Other Hot Work on Marine Vessels* and 26.02.09 *Designated Marine Hot Work Facilities and Shipyards* and any future revisions of this rule adopted by the *fire code official*.

***

Section 20. Chapter 36 of the 2012 International Fire Code is amended as follows:

CHAPTER 36

MARINAS

SECTION 3601

SCOPE

3601.1 Scope. Marina facilities shall be in accordance with this chapter.

Exceptions:

1. Approved designated hot work facilities and shipyards in accordance with the Administrative Rule 26.02.09, *Designated Hot Work Facilities and Shipyards* and any future revisions of this rule adopted by the *fire code official.*
2. Private, noncommercial docking facilities constructed or occupied for the use of the owners or residents of the associated single-family dwelling.
3. Marina facilities that include buildings and operations not directly associated with recreational boat moorage such as repair buildings, assembly operations, residential buildings, retail buildings etc in accordance with Seattle Building Code section 425.
4. Floating homes in accordance with Seattle Residential Code.
5. Approved *Marine Terminals* in accordance with Administrative Rule 27.01.09, *Marine Terminals*, and any future revisions of this rule adopted by the *fire code official*.

***

SECTION 3602

DEFINITIONS

3602.1 Definitions. The following terms are defined in Chapter 2:

BERTH

BOAT.

COVERED BOAT MOORAGE

DESIGNATED HOT WORK FACILITY.

FLOAT.

MARINA.

MARINE TERMINAL.

PIER.

SLIP.

((~~VESSEL.~~))

WHARF.

***

SECTION 3603

GENERAL PRECAUTIONS

***

3603.5 Electrical equipment. Electrical equipment shall be installed and used in accordance with its listing, Section 605 of this code and Chapter 5 of NFPA 303 as required for wet, damp and hazardous locations.

3603.5.1 Labeling electrical disconnects. Electrical transformers, control panels and breaker panels shall be readily accessible, clearly labeled and indicate the areas they service. See also Section 605.

***

3603.7 Signage ((~~**Slip identification**~~)). At the shore end of *piers*, *wharves* and *floats* conspicuous signage shall be located indicating the address of the *piers*, *wharves* and *floats* and, for those structures that are designed to support vehicles, the weight limit the structure can

support. Numbers and letters shall be easily legible and have high contrast with the color of the sign background. Numbers and letters shall not be less than 5 inches (127 mm) in height.

***

3603.8 Emergency Plan. Owners of piers, wharves, floats and marinas shall prepare an emergency plan for the facility. The plan shall include procedures for fire department notification and fire evacuation, and shall include the location of portable fire extinguishers and hose cabinets, sprinkler and standpipe system control valves, fire department connections and electrical disconnects.

3603.8 Point of Information

Emergency plan assistance can be found in Seattle Fire Department Client Assistance Memo 5072, located at http://www.seattle.gov/fire/FMO/firecode/cam/5072CAM%20MarinaPlans.pdf

SECTION 3604

FIRE PROTECTION EQUIPMENT

3604.1 General. Piers, marinas, ((~~and~~)) wharves ((~~with facilities for mooring or servicing five or more vessels,~~)) and marine motor fuel-dispensing facilities shall be equipped with fire protection ((~~equipment~~)) features in accordance with Sections 3604.2 through 3604.6.

3604.2 Standpipes. ((~~Marinas and boatyards shall be equipped throughout with standpipe systems in accordance with NFPA 303. Systems shall be provided with hose connections located such that no point on the marina pier or float system exceeds 150 feet (15 240 mm) from a standpipe hose connection.~~)) A manual Class I standpipe system in accordance with NFPA 14, or

Class III standpipe system in accordance with NFPA 14, if approved by the *fire code official*, shall be provided for *piers*, *wharves* and *floats* if the hose lay distance from the fire apparatus to the most remote accessible portion of the pier, wharf or float exceeds 150 feet (45 720 mm).

Approved plastic pipe may be used if installed underwater, or if another approved method of protection from fire is provided.

The standpipe piping shall be a minimum of 4 inches (102 mm), sized to provide a minimum of 500 gpm (365 L/s) at 130 psi (896 kPa) at the most remote hose connection, with a simultaneous flow of 500 gpm (31.5 L/s) at the third most remote hose connection on the same pier while maintaining a maximum system pressure of 175 psi (1206 kPa).

3604.2.1 Hose connections. Hose connection stations on required standpipes shall be provided at the water end of the *pier*, *wharf* or *float*, and along the entire length of the *pier*, *wharf* or *float* at spacing not to exceed 150 feet (45 720 mm) and as close as practical to the land end. Each hose connection shall consist of a valved 2 ½ -inch (64 mm) fire department hose outlet. Outlet caps shall have a predrilled 1/8-inch (3.2 mm) hole for pressure relief and be secured with a short length of chain or cable to prevent falling after removal. Listed equipment shall be used.

Exception: The hose connection at the land end of the pier, wharf or float may be omitted when a hose connection is located within 150 feet (45 720 mm) of the fire apparatus access road.

3604.2.((~~1~~))2 **Identification of standpipe outlets.** Standpipe hose connection locations shall be clearly identified by a flag or other approved means designed to be readily visible from the pier accessing the float system.

3604.3 Access and water supply. ((~~Piers and wharves shall be provided with fire apparatus access roads and water-supply systems with on-site fire hydrants when required by the fire code official. Such roads and water systems shall be provided and maintained in accordance with Sections 503 and 507.~~)) Fire department apparatus access lanes, not less than 20 feet wide (6096 mm) and capable of supporting a 50,000-pound (22 700 kg) vehicle or 24,000 pounds (10 896 kg) per axle (HS20 loading), shall be provided and so located as to provide fire department apparatus access to within 50 feet (15 240 mm) travel distance to the shore end of all piers, wharves and floats. The apparatus access lane shall meet the requirements of Appendix D.

At least two fire hydrants shall be provided. One hydrant shall be located within 500 feet (152 400 mm) of the closest point of fire department apparatus access to the shore end of the marina *piers*, *wharves* or *floats*, or to the fire department connection (FDC) for those *piers*, *wharves* or *floats* that are equipped with standpipes. The second fire hydrant shall be located within 1000 feet (304 800 mm) of the closest point of fire department apparatus access to the shore end of the marina *piers*, *wharves* or *floats*, or to the FDC for those piers, wharves or floats that are equipped with standpipes. All required hydrants shall be capable of delivering not less than 1000 gpm (63 L/s) at a minimum residual pressure of 20 psi (138 kPa) each.

3604.4 Portable fire extinguishers. One portable fire extinguisher ((~~of the ordinary (moderate) hazard type~~)) having a minimum rating of 2A 20-BC, shall be provided ((~~at each required~~

~~standpipe hose connection~~)) within 75 feet (22 860 mm) of all portions of *piers*, *wharves* and *floats*. If applicable, ((~~A~~))additional fire extinguishers, suitable for the hazards involved, shall be provided. Fire extinguishers shall be maintained in accordance with Section 906 and NFPA 10.

3604.5 Communications. A telephone not requiring a coin to operate or other approved, clearly identified means to notify the fire department shall be provided on the site in a location approved by the fire code official. The street address of the marina and emergency telephone number(s) shall be displayed prominently on a sign at the telephone.

3604.6 Emergency operations staging areas. Space shall be provided on all float systems for the staging of emergency equipment. Emergency operation staging areas shall provide a minimum of 4 feet wide by 10 feet long (1219 mm by 3048 mm) clear area exclusive of walkways and shall be located at each standpipe hose connection. Emergency operation staging areas shall be provided with a curb or barrier having a minimum height of 4 inches (102 mm) and maximum space between the bottom edge and the surface of the staging area of 2 inches (51 mm) on the outboard sides of the staging area.

An approved sign reading FIRE EQUIPMENT STAGING AREA—KEEP CLEAR shall be provided at each staging area.

3604.7 Automatic sprinkler systems. An approved automatic sprinkler systems shall be installed for covered boat moorage in accordance with section 3604.7.1.

3604.7.1 Covered boat moorage. Automatic sprinklers shall be provided for covered boat moorage exceeding 5,000 square feet (465m^2) in projected roof area per *pier*, *wharf* or *float*. The sprinkler system shall be designed and installed in accordance with NFPA 13 for Extra

Hazard Group 2 occupancy. If sprinklers are required by this chapter for covered boat moorage, the sprinklers shall be extended to any structure on the *pier*, *wharf* or *float* exceeding 500 square feet (46.5 m^2) in projected roof area. For the purposes of this chapter, the projected roof area means the footprint of the roof.

3604.7.2 Monitoring. Sprinkler systems shall be monitored in accordance with Section 903.4.1.

3604.8 Fire department connections. Standpipe and sprinkler systems shall be equipped with not less than a two-way 2 ½ -inch (64 mm) fire department connection (FDC), which shall be readily visible and located at the fire department apparatus access.

3604.9 Smoke and heat vents: Approved automatic smoke and heat vents shall be provided in covered boat moorage areas exceeding 2,500 sq. ft. (232 m^2) in area, excluding roof overhangs.

Exception: Smoke and heat vents are not required in areas protected by automatic sprinklers.

3604.9.1 Design and installation. Where smoke and heat vents are required they shall be installed near the roof peak, evenly distributed and arranged so that at least one vent is over each covered berth. The effective vent area shall be calculated using a ratio of one square foot of vent to every fifteen square feet of covered berth area (1:15). Each vent shall provide a minimum opening size of 4 ft. x 4 ft.

3604.9.1.1 Automatic Operation. Smoke and heat vents shall operate automatically by actuation of a heat-responsive device rated at between 100 degrees F (56 degrees C) and 220 degrees F (122 degrees C) above ambient.

Exception: Gravity-operated drop out vents in accordance with section 3604.9.1.2.

3604.9.1.2 Gravity-operated drop out vents. Gravity operated dropout vents shall fully open within 5 minutes after the vent cavity is exposed to a simulated fire represented by a time-temperature gradient that reaches an air temperature of 500 degrees F (260 degrees C) within 5 minutes.

3604.10 Draft curtains. Draft curtains shall be provided in covered boat moorage areas exceeding 2,500 sq. ft. (232 m^2) in area, excluding roof overhangs.

Exception: Draft curtains are not required in areas protected by automatic sprinklers.

3604.10.1 Draft curtain construction. Draft curtains shall be constructed of sheet metal, gypsum board or other approved materials that provide equivalent performance to resist the passage of smoke. Joints and connections shall be smoke tight.

3604.10.2 Draft curtain location and depth. The maximum area protected by draft curtains shall not exceed 2,000 sq. ft. (186 m^2) or two slips or berths, whichever is smaller. Draft curtains shall not extend past the piling line. Draft curtains shall have a minimum depth of 2 feet (609 mm) below the lower edge of the roof and shall not extend closer than 8 feet (2438 mm) to the walking surface on the pier.

***

Section 21. Chapter 50 of the 2012 International Fire Code is amended as follows:

CHAPTER 50

HAZARDOUS MATERIALS-GENERAL PROVISIONS

SECTION 5001

SCOPE

5001.1 Scope. Prevention, control and mitigation of dangerous conditions related to storage, dispensing, use and handling of hazardous materials and notification of biosafety level 3 and biosafety level 4 operations shall be in accordance with this chapter.

This chapter shall apply to all hazardous materials, including those materials regulated elsewhere in this code, except that when specific requirements are provided in other chapters, those specific requirements shall apply in accordance with the applicable chapter. Where a material has multiple hazards, all hazards shall be addressed.

Exceptions:

1. In retail or wholesale sales occupancies, the quantities of medicines, foodstuffs, consumer or industrial products and cosmetics containing not more than 50 percent by volume of water-miscible liquids and with the remainder of the solutions not being flammable shall not be limited, provided such materials are packaged in individual containers not exceeding 1.3 gallons (5 L).
2. Quantities of alcoholic beverages in retail or wholesale sales occupancies shall not be limited providing the liquids are packaged in individual containers not exceeding 1.3 gallons (5 L).
3. Application and release of pesticide and agricultural products and materials intended for use in weed abatement, erosion control, soil amendment or similar applications when applied in accordance with the manufacturers' instructions and label directions.

4. The off-site transportation of hazardous materials when in accordance with Department of Transportation (DOTn) regulations.
5. Building materials not otherwise regulated by this code.
6. Refrigeration systems (see Section 606).
7. Stationary storage battery systems regulated by Section 608.
8. The display, storage, sale or use of fireworks and explosives in accordance with Chapter 56.
9. Corrosives utilized in personal and household products in the manufacturers' original consumer packaging in Group M occupancies.
10. The storage of distilled spirits and wines in wooden barrels and casks.
11. The use of wall-mounted dispensers containing alcohol-based hand rubs classified as Class I or II liquids when in accordance with Section 5705.5.
12. Hazardous materials at marine terminals in accordance with Administrative Rule 27.01.09, *Marine Terminals* and any future revisions of this rule adopted by the *fire code official*.

5001.1.1 Waiver. The provisions of this chapter are waived when the fire code official determines that such enforcement is preempted by other codes, statutes or ordinances. The details of any action granting such a waiver shall be recorded and entered in the files of the code enforcement agency.

5001.1.2 Underground storage tanks. Pursuant to Section 106.5.1, the *fire code official approves* permits to install underground tanks issued by and inspections of underground tanks conducted by the Washington State Department of Ecology.

***

5001.5.2 Hazardous Materials Inventory Statement (HMIS). Where required by the fire code official, an application for or renewal of a permit shall include an HMIS ((~~, such as Superfund Amendments and Reauthorization Act of 1986 (SARA) Title III, Tier II Report or other approved statement. The HMIS shall include~~)) that includes the following information:

1. Product name.
2. Component.
3. Chemical Abstract Service (CAS) number.
4. Location where stored or used.
5. Container size.
6. Hazard classification.
7. Amount in storage.
8. Amount in use-closed systems.
9. Amount in use-open systems.

5001.5.2 Point of Information

Prior to developing a HMIS, please contact the Special Hazards Unit of the Fire Prevention Division for specific guidelines, format and assistance.

***

5001.7 Biosafety level 3 and biosafety level 4 operations. The *fire code official* shall be notified in writing annually of locations where biosafety level 3 (BSL-3) or biosafety level 4 (BSL-4) operations as defined by the U.S. Department of Health and Human Services Centers for Disease Control and Prevention and National Institutes of Health (CDC/NIH) are being performed. Such notification shall identify the location(s) within the building where BSL-3 and BSL-4 operations are conducted and shall certify compliance with the CDC/NIH's recommended practices for such operations.

SECTION 5002

DEFINITIONS

5002.1 Definitions. The following terms are defined in Chapter 2:

BOILING POINT.

CEILING LIMIT.

CHEMICAL.

CHEMICAL NAME.

CLOSED CONTAINER.

CONTAINER.

CONTROL AREA.

CYLINDER.

DAY BOX.

DEFLAGRATION.

DESIGN PRESSURE.

DETACHED BUILDING.

DISPENSING.

EXCESS FLOW CONTROL.

EXHAUSTED ENCLOSURE.

EXPLOSION.

FLAMMABLE VAPORS OR FUMES.

GAS CABINET.

GAS ROOM.

HANDLING.

HAZARDOUS MATERIALS.

HEALTH HAZARD.

IMMEDIATELY DANGEROUS TO LIFE AND HEALTH (IDLH).

INCOMPATIBLE MATERIALS.

LIQUID.

LOWER EXPLOSIVE LIMIT (LEL).

LOWER FLAMMABLE LIMIT (LFL).

MATERIAL SAFETY DATA SHEET (MSDS).

MAXIMUM ALLOWABLE QUANTITY PER CONTROL AREA.

NON-PRODUCTION LABORATORY FACILITY.

***

SECTION 5003

GENERAL REQUIREMENTS

***

5003.1.1 Maximum allowable quantity per control area. The maximum allowable quantity per control area shall be as specified in Tables 5003.1.1(1) through 5003.1.1(4).

For retail and wholesale storage and display in Group M occupancies and Group S storage, see Section 5003.11. Non-production laboratory facilities may be in accordance with Section 5003.13.

***

5003.2.2 Piping, tubing, valves and fittings. Piping, tubing, valves, and fittings conveying hazardous materials shall be designed and installed in accordance with ASME B31 or other approved standards, the Seattle Plumbing Code, and shall be in accordance with Sections 5003.2.2.1 and 5003.2.2.2.

***

5003.2.9.1 Equipment, devices and systems requiring testing. The following equipment, systems and devices shall be tested in accordance with Sections 5003.2.9 and 5003.2.9.2.

1. Gas detection systems, alarms and automatic emergency shutoff valves required by Section 6004.2.2.10 for highly toxic and toxic gases.
2. Limit control systems for liquid level, temperature and pressure required by Sections 5003.2.7, 5004.8 and 5005.1.4.

3. Emergency alarm systems and supervision required by Sections 5004.9 and 5005.4.4.
4. Monitoring and supervisory systems required by Sections 5004.10 and 5005.1.6.
5. Manually activated shutdown controls required by Section 6403.1.1.1 for compressed gas systems conveying pyrophoric gases.
6. Gas detectors installed in repair garages for vehicles using lighter-than-air fuels required by Section 2311.7.

***

5003.8.3 Control areas. Control areas shall comply with Sections 5003.8.3.1 through 5003.8.3.5.

5003.8.3.1 Construction requirements. Control areas shall be separated from each other by fire barriers constructed in accordance with Section 707 of the International Building Code or horizontal assemblies constructed in accordance with Section 711 of the International Building Code, or both.

5003.8.3.2 Percentage of maximum allowable quantities. The percentage of maximum allowable quantities of hazardous materials per control area allowed at each floor level within a building shall be in accordance with Table 5003.8.3.2.

Exception: *Non-production laboratory facilities* are permitted to be in accordance with Section 5003.13.

5003.8.3.3 Number. The maximum number of control areas per floor within a building shall be in accordance with Table 5003.8.3.2.

Exception: *Non-production laboratory facilities* are permitted to be in accordance with Section 5003.13.

5003.8.3.4 Fire-resistance-rating requirements. The required fire-resistance rating for fire barriers shall be in accordance with Table 5003.8.3.2 or Table 5003.13 for *non-production laboratory facilities*. The floor assembly of the control area and the construction supporting the floor of the control area shall have a fire-resistance rating of not less than 2-hours.

***

Table 5003.13
Design and Number of Control Areas in Non-Production Laboratory Facilities [a]

Floor Level		Percentage of the Maximum Allowable Quantity per Control Area [b]	Number of Control Areas per Floor	Fire-Resistance Rating for Fire Barriers in Hours [c,d]
Above Grade Plane	Higher than 20	Not Allowed	Not Allowed	Not Allowed
	6 - 20	15	2	2
	5	25	2	2
	4	25	2	2
	3	50	2	2
	2	75	2	1
	1	100	2	1
Below Grade Plane	1	75	2	1
	2	50	2	1
	Lower than 2	Not Allowed	Not Allowed	Not Allowed

a) Table 5003.13 applies to non-production laboratory facilities meeting the criteria of section 5003.13
b) Percentages shall be of the maximum allowable quantity per control area shown in Tables 5003.1.1(1) and 5003.1.1(2), with all increases allowed in the footnotes to those tables
c) Fire barriers shall include walls and floors as necessary to provide separation from other portions of the building
d) Vertical fire barriers separating control areas from other spaces on the same floor may be one hour rated.

5003.13 Non-production laboratory facilities. *Non-production laboratory facilities* are permitted to comply with Sections 5003.13.1 through 5003.13.4 in lieu of section5003.8.3.

5003.13.1 Maximum allowable quantity per control area. The aggregate amount of hazardous materials in a *control area* shall not exceed the percentage specified in Table 5003.13.

5003.13.2 Fire-resistance-rating requirements. The required fire-resistance-rating for fire barriers shall be in accordance with Table 5003.13 for non-production laboratory facilities.

5003.13.3 Storage. Storage in control areas shall be in accordance with this code and Sections 5003.13.3.1 through 5003.13.3.4.

5003.13.3.1 Density. Storage of Class I flammable liquids shall not exceed 4 gallons per 100 square feet (0.13 L/m^2) of floor area above floor level 6.

5003.13.3.2 Container size. Individual containers in storage shall not exceed 1 gallon (3.8 L) for Class I flammable liquids.

5003.13.4 Automatic sprinkler system. An approved automatic sprinkler system shall be installed throughout a building containing a non-production laboratory facility. The sprinkler system shall be designed to protect an ordinary hazard group 2 occupancy.

***

SECTION 5005

USE, DISPENSING AND HANDLING

***

5005.1.5 Standby or emergency power. Where mechanical ventilation, treatment systems, temperature control, manual alarm, detection or other electrically operated systems are

required, such systems shall be provided with an emergency or *legally required* standby power system in accordance with NFPA 70 and Section 604.

Exceptions:

1. ((~~Standby~~)) *Legally required standby* power for mechanical ventilation, treatment systems and temperature control systems shall not be required where an approved fail-safe engineered system is installed.
2. Systems for highly toxic or toxic gases shall be provided with emergency power in accordance with Sections 6004.2.2.8 and 6004.3.4.2.

***

Section 22. Chapter 53 of the 2012 International Fire Code is amended as follows:

CHAPTER 53

COMPRESSED GASES

***

SECTION 5306

MEDICAL GAS SYSTEMS

[W] 5306.1 General. Compressed gases at hospitals and similar facilities intended for inhalation or sedation including, but not limited to, analgesia systems for dentistry, podiatry, veterinary and similar uses shall comply with Sections 5306.2 through 5306.4 in addition to other requirements of this chapter.

Exception: All new distribution piping, supply manifolds, connections, regulators, valves, alarms, sensors and associated equipment shall be in accordance with the Plumbing Code.

***

[W]5306.4 Medical gas systems. The maintenance and testing of ((~~M~~)) medical gas systems including, but not limited to, distribution piping, supply manifolds, connections, pressure regulators and relief devices and valves, shall comply with the maintenance and testing requirements of NFPA 99 and the general provisions of this chapter.

***

Section 23. Chapter 56 of the 2012 International Fire Code is amended as follows:

CHAPTER 56

EXPLOSIVES AND FIREWORKS

SECTION 5601 GENERAL

***

5601.1 Scope. The provisions of this chapter shall govern the possession, manufacture, storage, handling, sale and use of explosives, explosive materials, fireworks and small arms ammunition.

Exceptions:

1. The Armed Forces of the United States, Coast Guard or National Guard.
2. Explosives in forms prescribed by the official United States Pharmacopoeia.
3. The possession, storage and use of small arms ammunition when packaged in accordance with DOTn packaging requirements.
4. The possession, storage and use of not more than 1 pound (0.454 kg) of commercially manufactured sporting black powder, 20 pounds (9 kg) of smoke- less powder and

10,000 small arms primers for hand loading of small arms ammunition for personal consumption.

5. The use of explosive materials by federal, state and local regulatory, law enforcement and fire agencies acting in their official capacities.
6. Special industrial explosive devices which in the aggregate contain less than 50 pounds (23 kg) of explosive materials.
7. The possession, storage and use of blank industrial- power load cartridges when packaged in accordance with DOTn packaging regulations.
8. Transportation in accordance with DOTn 49 CFR Parts 100–185.
9. Items preempted by federal regulations.
10. Explosive material, fireworks, pyrotechnic special effect material and small arms ammunition located at permitted marine terminals in accordance with Administrative Rule 27.01.09, *Marine Terminals* and any future revisions of this rule adopted by the *fire code official*.

***

5601.1.3 Fireworks. The possession, manufacture, storage, sale, handling and use of fireworks are prohibited.

Exceptions:

1. Storage and handling of fireworks as allowed in Section 5604,

((~~2. Manufacture, assembly and testing of fireworks as allowed in Section 5605.~~))

((~~3~~))2. The use of fireworks for fireworks displays as allowed in Section 5608.

((~~4. The possession, storage, sale, handling and use of specific types of Division 1.4G fireworks where allowed by applicable laws, ordinances and regulations, provided such fireworks comply with CPSC 16 CFR, Parts 1500 and 1507, and DOTn 49 CFR, Parts 100-185, for consumer fireworks.~~))

***

5601.2.4 Financial responsibility. Before a permit is issued, as required by Section 5601.2, ((~~the applicant shall file with the jurisdiction a corporate surety bond in the principal sum of $100,000 or a public liability insurance policy for the same amount, for the purpose of the payment of all damages to persons or property which arise from, or are caused by, the conduct of any act authorized by the permit upon which any judicial judgment results. The fire code official is authorized to specify a greater or lesser amount when, in his or her opinion, conditions at the location of use indicate a greater or lesser amount is required. Government entities shall be exempt from this bond requirement.~~)) <u>liability insurance in accordance with Section 105.3.9 of this code shall be obtained.</u>

5601.2.4.1 Blasting. Before approval to do blasting is issued, the applicant for approval shall file a bond or submit a certificate of insurance in such form, amount and coverage as determined by the legal department of the jurisdiction to be adequate in each case to indemnify the jurisdiction against any and all damages arising from permitted blasting.

((~~**5601.2.4.2 Fireworks display.** The permit holder shall furnish a bond or certificate of insurance in an amount deemed adequate by the fire code official for the payment of all~~

~~potential damages to a person or persons or to property by reason of the permitted display, and arising from any acts of the permit holder, the agent, employees or subcontractors.~~))

***

SECTION 5605

MANUFACTURE, ASSEMBLY AND TESTING OF EXPLOSIVES, EXPLOSIVE MATERIALS AND FIREWORKS

***

5605.1 General. The manufacture, assembly and testing of explosives, ammunition, blasting agents and fireworks is prohibited. ((~~shall comply with the requirements of this section and NFPA 495 or NFPA 1124.~~))

Exceptions:

1. The hand loading of small arms ammunition prepared for personal use and not offered for resale.
2. The mixing and loading of blasting agents at blasting sites in accordance with NFPA 495.
3. The use of binary explosives or plosophoric materials in blasting or pyrotechnic special effects applications in accordance with NFPA 495 or NFPA 1126.

((~~**5605.2 Emergency planning and preparedness.** Emergency plans, emergency drills, employee training and hazard communication shall conform to the provisions of this section and Sections 404, 405, 406 and 407.~~

~~**5605.2.1 Hazardous Materials Management Plans and Inventory Statements required.** Detailed Hazardous Materials Management Plans (HMMP) and Hazardous Materials Inventory Statements (HMIS) complying with the requirements of Section 407 shall be prepared and submitted to the local emergency planning committee, the fire code official and the local fire department.~~

~~**5605.2.2 Maintenance of plans.** A copy of the required HMMP and HMIS shall be maintained on site and fur- nished to the fire code official on request.~~

~~**5605.2.3 Employee training.** Workers who handle explosives or explosive charges or dispose of explosives shall be trained in the hazards of the materials and processes in which they are to be engaged and with the safety rules governing such materials and processes.~~

~~**5605.2.4 Emergency procedures.** Approved emergency procedures shall be formulated for each plant which will include personal instruction in any emergency that may be anticipated. All personnel shall be made aware of an emergency warning signal.~~

~~**5605.3 Intraplant separation of operating buildings.** Explosives manufacturing buildings and fireworks manufacturing buildings, including those where explosive charges are assembled, manufactured, prepared or loaded utilizing Division 1.1, 1.2, 1.3, 1.4 or 1.5 explosives, shall be separated from all other buildings, including magazines, within the confines of the manufacturing plant, at a distance not less than those shown in Table 5605.3 or 5604.5.2(3), as appropriate.~~

~~**Exception:** Fireworks manufacturing buildings separated in accordance with NFPA 1124.~~

~~The quantity of explosives in an operating building shall be the net weight of all explosives contained therein. Distances shall be based on the hazard division requiring the greatest separation, unless the aggregate explosive weight is divided by approved walls or shields designed for that purpose. When dividing a quantity of explosives into smaller stacks, a suitable barrier or adequate separation distance shall be provided to prevent propagation from one stack to another.~~

~~When distance is used as the sole means of separation within a building, such distance shall be established by testing. Testing shall demonstrate that propagation between stacks will not result. Barriers provided to protect against explosive effects shall be designed and installed in accordance with approved standards.~~

~~**5605.4 Separation of manufacturing operating buildings from inhabited buildings, public traffic routes and magazines.** When an operating building on an explosive materials plant site is designed to contain explosive materials, such a building shall be located away from inhabited buildings, public traffic routes and magazines in accordance with Table 5604.5.2(2) or 5604.5.2(3) as appropriate, based on the maximum quantity of explosive materials permitted to be in the building at one time (see Section 5601.8).~~

~~**Exception:** Fireworks manufacturing buildings constructed and operated in accordance with NFPA 1124.~~

~~**5605.4.1 Determination of net explosive weight for operating buildings.** In addition to the requirements of Section 5601.8 to determine the net explosive weight for materials stored or used in operating buildings, quantities of explosive materials stored in magazines located at~~

~~distances less than intraline distances from the operating building shall be added to the contents of the operating building to determine the net explosive weight for the operating building.~~

~~**5605.4.1.1 Indoor magazines.** The storage of explosive materials located in indoor magazines in operating buildings shall be limited to a net explosive weight not to exceed 50 pounds (23 kg).~~

~~**5605.4.1.2 Outdoor magazines with a net explosive weight less than 50 pounds.** The storage of explosive materials in outdoor magazines located at less than intraline distances from operating buildings shall be limited to a net explosive weight not to exceed 50 pounds (23 kg).~~

~~**5605.4.1.3 Outdoor magazines with a net explosive weight greater than 50 pounds.** The storage of explosive materials in outdoor magazines in quantities exceeding 50 pounds (23 kg) net explosive weight shall be limited to storage in outdoor magazines located not less than intraline distances from the operating building in accordance with Section 5604.5.2.~~

~~**5605.4.1.4 Net explosive weight of materials stored in combination indoor and outdoor magazines.** The aggregate quantity of explosive materials stored in any combination of indoor magazines or outdoor magazines located at less than the intraline distances from an operating building shall not exceed 50 pounds (23 kg).~~

~~**5605.5 Buildings and equipment.** Buildings or rooms that exceed the maximum allowable quantity per control area of explosive materials shall be operated in accordance with this section~~

~~and constructed in accordance with the requirements of the International Building Code for Group H occupancies.~~

~~**Exception:** Fireworks manufacturing buildings constructed and operated in accordance with NFPA 1124.~~

~~**5605.5.1 Explosives dust.** Explosives dust shall not be exhausted to the atmosphere.~~

~~**5605.5.1.1 Wet collector.** When collecting explosives dust, a wet collector system shall be used. Wetting agents shall be compatible with the explosives. Collector systems shall be interlocked with process power supplies so that the process cannot continue without the collector systems also operating.~~

~~**5605.5.1.2 Waste disposal and maintenance.** Explosives dust shall be removed from the collection cham- ber as often as necessary to prevent overloading. The entire system shall be cleaned at a frequency that will eliminate hazardous concentrations of explosives dust in pipes, tubing and ducts.~~

~~**5605.5.2 Exhaust fans.** Squirrel cage blowers shall not be used for exhausting hazardous fumes, vapors or gases. Only nonferrous fan blades shall be used for fans located within the ductwork and through which hazardous materials are exhausted. Motors shall be located outside the duct.~~

~~**5605.5.3 Work stations.** Work stations shall be separated by distance, barrier or other approved alternatives so that fire in one station will not ignite material in another work station. Where necessary, the operator shall be protected by a personnel shield located between the operator and the explosive device or explosive material being processed. This~~

~~shield and its support shall be capable of withstanding a blast from the maximum amount of explosives allowed behind it.~~

~~**5605.6 Operations.** Operations involving explosives shall comply with Sections 5605.6.1 through 5605.6.10.~~

~~**5605.6.1 Isolation of operations.** When the type of material and processing warrants, mechanical operations involving explosives in excess of 1 pound (0.454 kg) shall be carried on at isolated stations or at intraplant distances, and machinery shall be controlled from remote locations behind barricades or at separations so that workers will be at a safe distance while machinery is operating.~~

~~**5605.6.2 Static controls.** The work area where the screening, grinding, blending and other processing of static-sensitive explosives or pyrotechnic materials is done shall be provided with approved static controls.~~

~~**5605.6.3 Approved containers.** Bulk explosives shall be kept in approved, nonsparking containers when not being used or processed. Explosives shall not be stored or transported in open containers.~~

~~**5605.6.4 Quantity limits.** The quantity of explosives at any particular work station shall be limited to that posted on the load limit signs for the individual work station. The total quantity of explosives for multiple workstations shall not exceed that established by the intraplant distances in Table 5605.3 or 5604.5.2(3), as appropriate.~~

~~**5605.6.4.1 Magazines.** Magazines used for storage in processing areas shall be in accordance with the requirements of Section 5604.5.1. All explosive materials shall be~~

~~removed to appropriate storage magazines for unattended storage at the end of the work day. The contents of indoor magazines shall be added to the quantity of explosives contained at individual workstations and the total quantity of material stored, pro- cessed or used shall be utilized to establish the intraplant separation distances indicated by Table 5605.3 or 5604.5.2(3), as appropriate.~~

~~**5605.6.5 Waste disposal.** Approved receptacles with covers shall be provided for each location for disposing of waste material and debris. These waste receptacles shall be emptied and cleaned as often as necessary but not less than once each day or at the end of each shift.~~

~~**5605.6.6 Safety rules.** General safety rules and operating instructions governing the particular operation or process conducted at that location shall be available at each location.~~

~~**5605.6.7 Personnel limits.** The number of occupants in each process building and in each magazine shall not exceed the number necessary for proper conduct of production operations.~~

~~**5605.6.8 Pyrotechnic and explosive composition quantity limits.** Not more than 500 pounds (227 kg) of pyro- technic or explosive composition, including not more than 10 pounds (5 kg) of salute powder shall be allowed at one time in any process building or area. All compositions not in current use shall be kept in covered nonferrous containers.~~

~~**Exception:** Composition that has been loaded or pressed into tubes or other containers as consumer fire- works.~~

~~**5605.6.9 Posting limits.** The maximum number of occupants and maximum weight of pyrotechnic and explosive composition permitted in each process building shall be posted in a conspicuous location in each process building or magazine.~~

~~**5605.6.10 Heat sources.** Fireworks, explosives or explosive charges in explosive materials manufacturing, assembly or testing shall not be stored near any source of heat.~~

~~**Exception:** Approved drying or curing operations.~~

~~**5605.7 Maintenance.** Maintenance and repair of explosives- manufacturing facilities and areas shall comply with Section 5604.8.~~

~~**5605.8 Explosive materials testing sites.** Detonation of explosive materials or ignition of fireworks for testing pur- poses shall be done only in isolated areas at sites where distance, protection from missiles, shrapnel or flyrock, and other safeguards provides protection against injury to personnel or damage to property.~~

~~**5605.8.1 Protective clothing and equipment.** Protective clothing and equipment shall be provided to protect persons engaged in the testing, ignition or detonation of explosive materials.~~

~~**5605.8.2 Site security.** When tests are being conducted or explosives are being detonated, only authorized persons shall be present. Areas where explosives are regularly or frequently detonated or burned shall be approved and posted with adequate warning signs. Warning devices shall be activated before burning or detonating explosives to alert persons approaching from any direction that they are approaching a danger zone.~~

~~**5605.9 Waste disposal.** Disposal of explosive materials waste from manufacturing, assembly or testing operations shall be in accordance with Section 5604.10.~~

***

SECTION 5608

FIREWORKS DISPLAY

***

5608.1 General. The sale, possession, use or discharge of fireworks and pyrotechnic special effects in the City of Seattle is prohibited except where authorized by a fire department permit or exempted under this section. ((~~Outdoor fireworks displays, use of pyrotechnics before a proximate audience and pyrotechnic special effects in motion picture, television, theatrical and group entertainment productions shall comply with Sections 5608.2 through 5608.10 and NFPA 1123 or NFPA 1126.~~))

Exceptions:

1. The use of fireworks by railroads or other transportation agencies for signaling or illumination.
2. The sale or use of blank cartridges or fireworks if *approved* by the *fire code official* for theatrics, signaling or ceremonial purposes.
3. The use of fireworks by the United States Armed Forces.

5608.2 Permit application. Prior to issuing permits for a fireworks display, plans for the fireworks display, inspections of the display site and demonstrations of the display operations shall be approved. A plan establishing procedures to follow and actions to be taken in the event that a shell fails to ignite in, or discharge from, a mortar or fails to function over the fallout area or other malfunctions shall be provided to the fire code official.

An application for a permit shall be made in writing to the *fire code official* at least 30 days in advance of the display. At the time the permit application is submitted, the *fire code official* shall

be consulted regarding requirements for standby fire apparatus. No person under 18 years of age may apply for or receive a permit under this section.

***

5608.4.1 Display site. The radius of the display site for outdoor water or land displays shall be at least 100 foot per inch (1200 per mm) based on the internal mortar diameter of the largest aerial shell to be fired.

The designated landing areas shall be an approved large, clear, open area. Spectators, vehicles and combustible materials shall not be allowed within the designated landing area. The designated landing area shall not be within 100 feet (30 480 mm) of tents and membrane structures. The firing and storage site shall be located not less than 200 feet (60 960 mm) from a building, tent or membrane structure.

When the display is fired from a barge, such barge shall be of noncombustible construction or have a noncombustible surface.

When the display is fired from a barge or vessel, a security area shall be established around the barge to prevent boats from entering the area. No boats shall be allowed within 200 feet (60 960 mm) of the firing or storage site. A boat shall be on standby to remove personnel from the barge or water in an emergency. All personnel aboard the barge shall have approved flotation devices.

Additional water-filled fire extinguishers, rated 2-A minimum, shall be on the barge and so spaced that an extinguisher shall be available within 30 feet (9144 mm) at all times.

***

Section 24. Chapter 57 of the 2012 International Fire Code is amended as follows:

CHAPTER 57

FLAMMABLE AND COMBUSTIBLE LIQUIDS

SECTION 5701

GENERAL

***

5701.4 Permits. Permits are ((~~shall be~~)) required as set forth in Sections 105.6 and 105.7, unless a permit has been issued by the Department of Ecology to install an underground tank.

***

SECTION 5704

STORAGE

***

5704.2.7.4 Emergency venting. Stationary, above- ground tanks shall be equipped with additional venting that will relieve excessive internal pressure caused by exposure to fires. Emergency vents for Class I, II and IIIA liquids shall not discharge inside buildings and the vent termination shall be located in accordance with Section 5704.2.7.3.3. The venting shall be installed and maintained in accordance with Section 22.7 of NFPA 30.

***

5704.2.7.5.6 Location of connections that are made or broken. Filling, withdrawal and vapor- recovery connections for Class I, II and IIIA liquids which are made and broken shall be located outside of buildings, not more than 5 feet (1524 mm) above the

finished ground level, in an approved location in close proximity to the parked delivery vehicle. Such location shall be away from sources of ignition and not less than 5 feet (1524 mm) away from building openings. Such connections shall be closed and liquid tight when not in use and shall be properly identified.

Exception: Fill connections for diesel fuel tanks attached to emergency generators may be located within dedicated loading docks of buildings if installed within 10 feet (3048 mm) of the exterior opening of the loading dock and if the loading dock entrance doors have openings comprising at least 50 percent of the door area.

***

5704.2.9.7.3 Flame arresters. Approved flame arresters or pressure vacuum breather valves shall be installed in normal vents.

Exception: Tanks storing class II, or III liquids.

5704.2.9.7.4 Secondary containment. Protected above-ground tanks shall be provided with secondary containment, drainage control or diking in accordance with Section 5004.2. A means shall be provided to establish the integrity of the secondary containment in accordance with NFPA 30.

Exception: Double wall tanks where all piping connections to the tank are located above the maximum liquid level, and a means is provided to prevent the release of liquids from the tank by siphon.

***

5704.2.13 Abandonment and status of tanks. Tanks taken out of service shall be removed in accordance with Section 5704.2.14, or safeguarded in accordance with Sections 5704.2.13.1 through 5704.2.13.2.3 and API 1604.

Residential heating oil tanks required by this code to be removed or decommissioned shall also comply with Administrative Rule 34.02.07, *Decommissioning Residential Heating Oil Tanks* and any future revisions of this rule adopted by the *fire code official*.

***

5704.3.4 Quantity limits for storage. Liquid storage quantity limitations shall comply with Sections 5704.3.4.1 through 5704.3.4.4.

5704.3.4.1 Maximum allowable quantity per control area. For occupancies other than Group M wholesale and retail sales uses and Group B non-production laboratories, indoor storage of flammable and combustible liquids shall not exceed the maximum allowable quantities per control area indicated in Table 5003.1.1(1) and shall not exceed the additional limitations set forth in this section.

For Group M occupancy wholesale and retail sales uses, indoor storage of flammable and combustible liquids shall not exceed the maximum allowable quantities per control area indicated in Table 5704.3.4.1.

For Group B non-production laboratories indoor storage of flammable and combustible liquids is allowed to be in accordance with Table 5003.13 and Section 5003.13.

***

5704.3.4.4 Liquids for maintenance and operation of equipment. In all occupancies, quantities of flammable and combustible liquids in excess of 10 gallons (38 L) used for maintenance purposes, demonstration, treatment, and laboratory work, and the operation of equipment shall be stored in liquid storage cabinets in accordance with Section 5704.3.2. Quantities not exceeding 10 gallons (38 L) are allowed to be stored outside of a cabinet when in approved containers located in private garages or other approved locations.

***

SECTION 5705

DISPENSING, USE, MIXING AND HANDLING

***

5705.3.5.1 Maximum allowable quantity per control area. Indoor use, dispensing and mixing of flammable and combustible liquids shall not exceed the maximum allowable quantity per control area indicated in Table 5003.1.1(1) and shall not exceed the additional limitations set forth in Section 5705.3.5.

Exceptions:

1. Cleaning with Class I, II and IIIA liquids shall be in accordance with Section 5705.3.6.
2. Group B non-production laboratories in accordance with Table 5003.8.3.3 and Section 5003.13.

***

5705.3.7.5.3 Spill control and secondary containment. Spill control shall be provided in accordance with Section 5703.4 where Class I, II or IIIA liquids are dispensed into containers exceeding a 1.3-gallon (5 L) capacity or mixed or used in open containers or systems exceeding a 5.3-gallon (20 L) capacity. Spill control and secondary containment shall be provided in accordance with Section 5703.4 when the capacity of an individual container exceeds 55 gallons (208 L) or the aggregate capacity of multiple containers or tanks exceeds 100 gallons (378.5 L).

Exception: Double wall tanks where all piping connections to the tank are located above the maximum liquid level, and a means is provided to prevent the release of liquids from the tank by siphon.

***

Section 25. Chapter 61 of the 2012 International Fire Code is amended as follows:

CHAPTER 61

LIQUEFIED PETROLEUM GASES

SECTION 6101

GENERAL

6101.1 Scope. Storage, handling and transportation of liquefied petroleum gas (LP-gas) and the installation of LP-gas equipment pertinent to systems for such uses shall comply with this

chapter, NFPA 54, and NFPA 58. Properties of LP-gases shall be determined in accordance with Appendix B of NFPA 58.

***

6103.1 General. LP-gas equipment shall be installed in accordance with ((~~the International Fuel Gas Code~~)) NFPA 54 and NFPA 58, except as otherwise provided in this chapter.

***

6103.2.1.4 Group B, E and I occupancies. In Group E and I occupancies, portable LP-gas containers are allowed to be used for research and experimentation. Such containers shall not be used in classrooms. Such containers shall not exceed a 50-pound (23 kg) water capacity in occupancies used for educational or research purposes and shall not exceed a 12-pound (5 kg) water capacity in occupancies used for institutional purposes. Where more than one such container is present in the same room, each container shall be separated from other containers by a distance of not less than 20 feet (6096 mm).

***

6103.2.1.7 Use for food preparation. Where approved, listed LP-gas commercial food service appliances are allowed to be used for food-preparation within restaurants and in attended commercial food- catering operations in accordance with ((~~the International Fuel Gas Code~~)) NFPA 54, the International Mechanical Code and NFPA 58.

6103.2.2 Industrial vehicles and floor maintenance machines. LP-gas containers on industrial vehicles and floor maintenance machines shall comply with Sections 11.13 and 11.14 of NFPA 58.

6103.3 Location of equipment and piping. Equipment and piping shall not be installed in locations where such equipment and piping is prohibited by NFPA 54.((~~the International Fuel Gas Code.~~))

***

SECTION 6104

LOCATION OF LP-GAS CONTAINERS

***

6104.2 Fire District restrictions. Storage and use of LP-gas containers having an individual capacity in excess of 239 pounds (108.4 kg) water capacity [nominal 100 pounds (48.3 kg) LP-gas] and all stationary installations are prohibited in the Fire District.

Exception: Containers and stationary installations up to 500 gallons (1892 L) LP-gas capacity west of Alaskan Way. ((~~**Maximum capacity within established limits.** Within the limits established by law restricting the storage of liquefied petroleum gas for the protection of heavily populated or congested areas, the aggregate capacity of any one installation shall not exceed a water capacity of 2,000 gallons (7570 L) (see Section 3 of the Sample Legislation for Adoption of the International Fire Code on page xxi).~~

~~**Exception:** In particular installations, this capacity limit shall be determined by the fire code official, after consideration of special features such as topographical conditions, nature of occupancy, and proximity to buildings, capacity of proposed LP-gas containers, degree of fire protection to be provided and capabilities of the local fire department.~~))

6104.3 Container location. LP-gas containers shall be located with respect to buildings, public ways and lot lines of adjoining property that can be built upon, in accordance with Table 6104.3.

6104.3.1 Installation on roof and exterior balconies prohibited. LP-gas containers used in stationary installations shall not be located on the roofs and exterior balconies of buildings.

Exception: A single LP-gas container having an individual capacity not exceeding 48 pounds (nominal 20 lb. LP-gas) connected to a grill.

6104.3.2 Special hazards. LP-gas containers shall also be located with respect to special hazards including, but not limited to, above-ground flammable or combustible liquid tanks, oxygen or gaseous hydrogen containers, flooding or electric power lines as specified in Section 6.4.5 of NFPA 58.

***

SECTION 6109

STORAGE OF PORTABLE LP-GAS CONTAINERS AWAITING USE OR RESALE

***

6109.9 Storage within buildings accessible to the public. Department of Transportation (DOTn) specification cylinders with maximum water capacity of 2 ½ pounds (1 kg) used in completely self-contained hand torches and similar applications are allowed to be stored or displayed in a building accessible to the public. The quantity of LP-gas shall not exceed 25 pounds (11.4 kg) within the Fire District and 200 pounds (91 kg) elsewhere except as provided in Section 6109.11.

6109.10 Storage within buildings not accessible to the public. The maximum quantity allowed in one storage location in buildings not accessible to the public, such as industrial buildings, shall not exceed a water capacity of 72 pounds water capacity (nominal 30 pounds LP-gas) within the Fire District and 735 pounds (334 kg) [nominal 300 pounds (136 kg) of LP-gas] elsewhere. Where additional storage locations are required on the same floor within the same building, they shall be separated by a minimum of 300 feet (91 440 mm). Storage beyond these limitations shall comply with Section 6109.11.

***

Section 26. Chapter 80 of the 2012 International Fire Code is amended as follows:

CHAPTER 80

REFERENCED STANDARDS

This chapter lists the standards that are referenced in various sections of this document. The standards are listed herein by the promulgating agency of the standard, the standard identification, the effective date and title, and the section or sections of this document that reference the standard. The application of the referenced standards shall be as specified in Section 102.7.

***

National Fire Protection Association
1 Batterymarch Park

NFPA Quincy, MA 02169-7471

Standard reference number	Title	Referenced in code section number
10—10	Portable Fire Extinguishers	Table 901.6.1, 906.2, 906.3,

Table 906.3(1), Table 906.3(2), 906.3.2, 906.3.4, 2106.3, I101.1
11—10 Low-, Medium- and High-expansion Foam. 904.7, 3404.2.9.2.2
12—11 Carbon Dioxide Extinguishing Systems. . . . . .Table 901.6.1, 904.8, 904.11
12A—09 Halon 1301 Fire Extinguishing Systems. . . . . .Table 901.6.1, 904.9
13—10 Installation of Sprinkler Systems . . . . . .Table 903.3.1.1, 903.3.2, 903.3.5.1.1, 903.3.5.2, 904.11, 905.3.4, 907.7.3, 2301.1, 2304.2, Table 2306.2, 2306.9, 2307.2, 2307.2.1, 2308.2.2, 2308.2.2.1, 2308.4, 2310.1, 2501.1, 2804.1, 2806.5.7, 3404.3.3.9, Table 3404.3.6.3(7), 3404.3.7.5.1, 3404.3.8.4
13D—10 Installation of Sprinkler Systems in One- and Two-family Dwellings and Manufactured Homes 903.3.1.3, 903.3.5.1.1
13R—10 Installation of Sprinkler Systems in Residential Occupancies up to and Including Four Stories in Height 903.3.1.2, 903.3.5.1.1, 903.3.5.1.2, 903.4
14—10 Installation of Standpipe and Hose Systems 905.2, 905.3.4, 905.4.2, 905.6.2, 905.8
15—12 Water Spray Fixed Systems for Fire Protection. 3404.2.9.2.3
16—11 Installation of Foam-water Sprinkler and Foam-water Spray Systems 904.7, 904.11
17—09 Dry Chemical Extinguishing Systems . . . . . .Table 901.6.1, 904.6, 904.11
17A—09 Wet Chemical Extinguishing Systems . . . . . .Table 901.6.1, 904.5, 904.11
20—10 Installation of Stationary Pumps for Fire Protection 913.1, 913.2, 913.5.1
22—08 Water Tanks for Private Fire Protection 507.2.2
24—10 Installation of Private Fire Service Mains and Their Appurtenances 507.2.1, 1909.5
25—11 Inspection, Testing and Maintenance of Water-based Fire Protection Systems . . . . . 507.5.3, Table 901.6.1, 904.7.1, 912.6, 913.5, I101.1
30—12 Flammable and Combustible Liquids Code . . . . . 3403.6.2, 3403.6.2.1, 3404.2.7, 3404.2.7.1, 3404.2.7.2, 3404.2.7.3.6, 3404.2.7.4, 3404.2.7.6, 3404.2.7.7, 3404.2.7.8, 3404.2.7.9, 3404.2.9.3, 3404.2.9.4, 3404.2.9.6.1.1, 3404.2.9.6.1.2, 3404.2.9.6.1.3, 3404.2.9.6.1.4, 3404.2.9.6.1.5, 3404.2.9.6.2, 3404.2.9.7.4, 3404.2.10.2, 3404.2.11.4, 3404.2.11.5.2, 3404.2.12.1, 3404.3.1, 3404.3.6,Table 3404.3.6.3(1), Table 3404.3.6.3(2), Table 3404.3.6.3(3), 3404.3.7.2.3, 3404.3.8.4, 3406.8.3
30A—12 Code for Motor Fuel-dispensing Facilities and Repair Garages 2201.4, 2201.5, 2201.6, 2206.6.3, 2210.1
30B—11 Manufacture and Storage of Aerosol Products. . . . . 2801.1, 2803.1, 2804.1, Table 2804.3.1, Table 2804.3.2, Table 2804.3.2.2, 2804.4.1, 2804.5.2, 2804.6, 2806.2.3, 2806.3.2, Table 2806.4, 2806.5.1, 2806.5.6, 2807.1
31—11 Installation of Oil-burning Equipment 603.1.7, 603.3.1, 603.3.3
32—11 Dry Cleaning Plants 1207.1, 1207.3
33—11 Spray Application Using Flammable or Combustible Materials 1504.3.2
34—11 Dipping and Coating Processes Using Flammable or Combustible Liquids. 1505.3, 1505.4.1.1
35—11 Manufacture of Organic Coatings 2001.3, 2005.4
40—11 Storage and Handling of Cellulose Nitrate Film. 306.2
51—07 Design and Installation of Oxygen-fuel Gas Systems for Welding, Cutting and Allied Processes 2601.5, 2607.1, 2609.1
51A—11 Acetylene Cylinder Charging Plants 2608.1
52—10 Vehicular Fuel System Code 3001.1
55—10 Standard for the Storage, Use and Handling of Compressed Gases and Cryogenic Fluids in Portable and Stationery Containers Cylinders and Tanks. 2209.2.1, 3201.1, 3501.1, 4001.1
58—11 Liquefied Petroleum Gas Code 603.4.2.1.1, 3801.1, 3803.1, 3803.2.1, 3803.2.1.2, 3803.2.1.7, 3803.2.2, 3804.1, 3804.3.1, 3804.4, 3806.2, 3806.3, 3807.2, 3808.1, 3808.2, 3809.11.2, 3811.3
59A—09 Production, Storage and Handling of Liquefied Natural Gas (LNG) 3001.1, 3201.1
61—08 Prevention of Fires and Dust Explosions in Agricultural and Food Products Facilities . . . . . Table 1304.1
69—08 Explosion Prevention Systems . . . . . .911.1, 911.3, Table 1304.1
70—11 National Electrical Code . . . . . 603.1.3, 603.1.7, 603.5.2, 604.2.15.1, 605.3, 605.4, 605.9, 606.16, 904.3.1, 907.1, 909.11, 909.12.1, 909.16.3, 1106.3.4, 1204.2.3, Table 1304.1, 1404.7, 1503.2.1, 1503.2.1.1, 1503.2.1.4, 1503.2.5, 1504.9.4, 1604.5, 1703.2, 1803.7.1, 1803.7.2, 1803.7.3, 1903.4, 2004.1, 2205.4, 2208.8.1.2.4, 2209.2.3, 2211.3.1, 2211.8.1.2.4, 2403.12.6.1, 2404.15.7, 2606.4, 2703.7.3, 3003.7.6, 3003.8, 3003.16.11, 3003.16.14, 3203.6, 3203.7.2, 3403.1, Table 3403.1.1, 3403.1.3, 3404.2.8.12, 3404.2.8.17, 3406.2.8, 3503.1.5, 3503.1.5.1, 3507.1.10, 3606.5.5, 3606.5.6, 3704.2.2.8
72—10 National Fire Alarm Code . . . . . 508.1.5, Table 901.6.1, 903.4.1, 904.3.5, 907.2, 907.2.6, 907.2.11,

907.2.13.2, 907.3, 907.4.3, 907.4.4, 907.6.2.1.2, 907.6.2.2, 907.7, 907.7.1, 907.7.2, 907.7.5, 907.8, 907.8.1, 907.8.2, 907.9, 907.9.2, 907.9.5, I101.1, J103.1.4

80—10 Fire Doors and Other Opening Protectives 703.1.3, 1008.1.3.3
85—11 Boiler and Combustion System Hazards Code . . . . . .Table 1304.1
86—11 Ovens and Furnaces. 2101.1
92B—09 Smoke Management Systems in Malls, Atria and Large Spaces 909.8
96 – 10 Standard for Ventilation Control and Fire Protection of Commercial Cooking Operations……..609.3
99—10 Health Care Facilities 3006.4
101—12 Life Safety Code. 1028.6.2
105—10 Installation of Smoke Door Assemblies and Other Opening Protectives 703.1.2
110—10 Emergency and Standby Power Systems 604.1, 604.3, 604.4, 913.5.2, 913.5.3
111—10 Stored Electrical Energy Emergency and Standby Power Systems. 604.1, 604.3, 604.4
120—010 Coal Preparation Plants . . . . . .Table 1304.1
130-10 as amended Standard for Fixed Guideway Transit and Passenger Rail Systems…… ……318
160—11 Flame Effects Before an Audience. 308.3.2
170—09 Standard for Fire Safety and Emergency Symbols 1024.2.6.1
211—10 Chimneys, Fireplaces, Vents and Solid Fuel-burning Appliances 603.2
241—09 Safeguarding Construction, Alteration and Demolition Operations. 1401.1
253—11 Standard Test for Critical Radiant Flux of Floor Covering Systems Using a Radiant Heat Energy Source . 804.3
260—09 Methods of Tests and Classification System for Cigarette Ignition Resistance of Components of Upholstered Furniture . …….. . 805.1.1.1, 805.2.1.1, 805.3.1.1, 805.4.1.1
261—09 Method of Test for Determining Resistance of Mock-up Upholstered Furniture Material Assemblies to Ignition by Smoldering Cigarettes 805.2.1.1, 805.3.1.1, 805.4.1.1
265—11 Method of Fire Tests for Evaluating Room Fire Growth Contribution of Textile Wall Coverings in Full Height Panels and Walls. 803.5.1, 803.5.1.1, 803.5.1.2, 805.4.1.1
286—11 Standard Method of Fire Tests for Evaluating Contribution of Wall and Ceiling Interior Finish to Room Fire Growth 803.1, 803.1.2, 803.1.2.1, 803.5.1
303—11 Fire Protection Standard for Marinas and Boatyards. 905.3.7, 4503.5, 4503.6, 4504.2
385—07 Tank Vehicles for Flammable and Combustible Liquids 3406.5.4.5, 3406.6, 3406.6.1
407—12 Aircraft Fuel Servicing. 1106.2, 1106.3
409—10 Aircraft Hangars . . . . . .914.8.2, Table 914.8.2, 914.8.2.1, 914.8.5
430—10 Storage of Liquid and Solid Oxidizers. 4004.1.4
484—12 Combustible Metals. . . . . .Table 1304.1
490—10 Storage of Ammonium Nitrate. 3301.1.5
495—10 Explosive Materials Code 911.1, 911.4, 3301.1.1, 3301.1.5, 3302.1, 3304.2, 3304.6.2, 3304.6.3, 3304.7.1, 3305.1, 3306.1, 3306.5.2.1, 3306.5.2.3, 3307.1, 3307.9, 3307.11, 3307.15
498—10 Safe Havens and Interchange Lots for Vehicles Transporting Explosives. 3301.1.2
502 - 11 as amended Standard for Road Tunnels, Bridges, and Other Limited Access Highways……319
505—10 Powered Industrial Trucks, Including Type Designations, Areas of Use, Maintenance and Operation . 2703.7.3
654—11 Prevention of Fire and Dust Explosions from the Manufacturing, Processing and Handling of Combustible Particulate Solids . . . . . .Table 1304.1
655—12 Prevention of Sulfur Fires and Explosions . . . . . .Table 1304.1
664—012 Prevention of Fires and Explosions in Wood Processing and Woodworking Facilities. . . Table 1304.1, 1905.3
701—10 Methods of Fire Tests for Flame-propagation of Textiles and Films 806.2, 807.1, 807.1.2, 807.2, 807.4.2.2, 1703.5, 2404.2
703—12 Fire Retardant Impregnated Wood and Fire Retardant Coatings for Building Materials. 803.4
704—12 Identification of the Hazards of Materials for Emergency Response 606.7, 1802.1, 2404.2, 2703.2.2.1, 2703.2.2.2, 2703.5, 2703.10.2, 2705.1.10, 2705.2.1.1, 2705.4.4, 3203.4.1, 3404.2.3.2, F101.1, F101.2
720 – 05 Standard for the Installation of Carbon Monoxide (CO) Detection and Warning Equipment ……..907.2.8, 907.2.9, 907.2.10
750—10 Water Mist Fire Protection Systems. . . . . .Table 901.6.1
1122—08 Model Rocketry 3301.1.4
1123—10 Fireworks Display 3302.1, 3304.2, 3308.1, 3308.2.2, 3308.5, 3308.6
1124—12 Manufacture, Transportation, Storage and Retail Sales of Fireworks and Pyrotechnic Articles 3302.1, 3304.2, 3305.1, 3305.3, 3305.4, 3305.5
1125—12 Manufacture of Model Rocket and High Power Rocket Motors 3301.1.4
1126—11 Use of Pyrotechnics Before a Proximate Audience 3304.2, 3305.1, 3308.1, 3308.2.2, 3308.4, 3308.5
1127—08 High Power Rocketry 3301.1.4
1142—12 Water Supply for Suburban and Rural Fire Fighting B103.3
2001—11 Clean Agent Fire Extinguishing Systems . . . . . .Table 901.6.1, 904.10

Section 27. A new Chapter 90 is adopted as follows:

CHAPTER 90

RESIDENTIAL OCCUPANCIES

FOUR STORIES AND OVER

Chapter 90 Point of Information

The requirements of this Chapter originated in City of Seattle Ordinance 98868, effective June 6, 1970. Ordinance 98868, also known as the Ozark ordinance, applied to all existing apartment houses, apartment hotels, and hotels four stories or more in height.

SECTION 9001

GENERAL

9001.1 Definitions. For the purpose of this chapter, the following words and terms have the meaning specified in Section 9001.1:

APARTMENT HOUSE: Any building or portion thereof, containing three or more dwelling units.

APARTMENT HOTEL: A building containing both dwelling units and guest rooms.

GUEST ROOM: Any room or rooms used or intended to be used for sleeping purposes by a person hiring such room or rooms.

HOTEL: A building in which is conducted the business of lodging the public and which contains six or more guest rooms.

9001.2 Exit Enclosure Required. All existing apartment houses, apartment hotels and hotels four stories or more in height, shall have at least two fully enclosed stairways that have a one-hour fire-resistive rating throughout. The interior corridors and egressways thereof, including all doors, transoms and other openings into corridors, shall be constructed or improved to substantially have a one-hour fire-resistive rating throughout. In buildings constructed as apartment houses in accordance with the *International Building Code* and being operated as apartment houses, walls and ceilings of plaster on wood lath or 1/2-inch plasterboard construction, and 1-3/8-inch solid core doors or equivalent is sufficient to meet the requirements of this section.

9001.3 Sprinkler Alternative. In lieu of compliance with the requirements of Section 9001.2, approved automatic fire sprinkler systems may be installed in all stairways, interior corridors and egressways of existing apartment houses, apartment hotels, and hotels four stories or more in height. Automatic sprinkler systems, if so installed, shall also be installed in all janitor rooms, storage closets, utility rooms, and other usable spaces in which combustible materials are or may be sorted or kept, unless such rooms or spaces are equipped with self-closing fire doors having a one-hour fire-resistive rating.

SECTION 9002

CONFLICTS WITH LATER ADOPTED CODES

9002.1 Conflicts with Seattle Building and Seattle Fire Codes adopted after June 6, 1970. If conflicts exist between the requirements of this chapter and Seattle Building Codes and Seattle Fire Codes adopted after June 6, 1970, the provisions of the later adopted codes apply.

Section 28. A new Chapter 91 is adopted as follows:

CHAPTER 91

AUTOMATIC SPRINKLER SYSTEMS

IN NURSING HOMES

Point of Information

The requirements of this Chapter originated in City of Seattle Ordinance 94931, effective August 5, 1966.

SECTION 9101

SCOPE

9101.1 Nursing Home Defined. For the purpose of this chapter, the term "nursing home" means any home, place, or institution that operates or maintains facilities providing convalescent or chronic care, or both, for a period in excess of 24 consecutive hours for three or more patients not related by blood or marriage to the operator, who by reason of illness or infirmity, are unable properly to care for themselves. Convalescent and chronic care may include, but is not limited to any or all procedures commonly employed in waiting on the sick such as administration of medicines, preparation of dressings and bandages, and carrying out of treatment prescribed by a duly licensed practitioner of the healing arts. It may also include care of mentally incompetent

persons if they do not require psychiatric treatment by or under the supervision of a physician specialized in the field of medicine. Nothing in this definition shall be construed to include general hospitals or other places that provide care and treatment for the acutely ill and maintain and operate facilities for major surgery or obstetrics, or both. Nothing in this definition shall be construed to include any boarding home, guest home, hotel or related institution that is held forth to the public as providing, and that is operated to give only board, room and laundry to persons not in need of medical or nursing treatment or supervision, except in the case of temporary acute illness. The mere designation by the operator of any place or institution, which does not provide care for the acutely ill or maintain and operate facilities for major surgery or obstetrics, as a hospital, sanitarium, or similar name shall not exclude such place or institution from the provisions of Section 9102.

SECTION 9102

INSTALLATION OF EQUIPMENT

9102.1 Installation Exceptions. Approved automatic fire sprinkler systems shall be installed in all usable rooms, corridors, and stairways of existing nursing homes with the following exceptions:

1. Nursing homes that are of Type I or II construction throughout, as defined in the *International Building Code*.
2. Nursing homes not more than one story in height which have interiors with a one-hour fire resistance rating throughout.

SECTION 9103

CONFLICTS WITH LATER ADOPTED CODES

Section 9103.1. Conflicts with Seattle Building and Seattle Fire Codes adopted after August 5, 1966. If conflicts exist between the requirements of this chapter and Seattle Building Codes and Seattle Fire Codes adopted after August 5, 1966, the provisions of the later adopted code apply if they are not less stringent.

Section 29. A new Chapter 92 is adopted as follows:

CHAPTER 92

AUTOMATIC SPRINKLER SYSTEMS IN SCHOOLS

Chapter 92 Point of Information

The requirements of this Chapter originated in City of Seattle Ordinance 94931, effective August 5, 1966.

SECTION 9201

GENERAL

9201.1 School Buildings Defined. For the purpose of this chapter, the term "school building," means:

1. A public place of instruction operated by public authorities, including elementary and secondary schools.
2. A place of instruction operated by private persons or private or religious organizations in which the course of study is similar to that in a public school, and which has been authorized by the State as an educational institution.

SECTION 9202

INSTALLATION OF EQUIPMENT

9202.1 Installation Exceptions. An approved automatic fire sprinkler system shall be installed in all usable rooms, corridors and stairways of existing school buildings, two stories or more in height, with the following exceptions:

1. School buildings that are of Type I or II construction as defined in the Building Code.
2. School buildings not over three stories in height that have interiors with one-hour fire resistance rating throughout, and that have egress enclosures with a one-hour fire resistance rating.
3. School buildings, not over three stories in height, with interiors that substantially have a one-hour fire resistance rating, need only have egress corridors, stairways, janitor rooms, storage rooms and similar spaces equipped with approved automatic sprinkler systems. Classrooms and assembly rooms in such buildings need not be so equipped.

SECTION 9203

CONFLICTS WITH LATER ADOPTED CODES

9203.1 Conflicts with Seattle Building and Seattle Fire Codes adopted after August 5, 1966. If conflicts exist between the requirements of this chapter and Seattle Building Codes and Seattle Fire Codes adopted after August 5, 1966, the provisions of the later adopted code apply.

Section 30. A new Chapter 93 is adopted as follows:

CHAPTER 93

MINIMUM STANDARDS FOR HIGH-RISE BUILDINGS

Chapter 93 Point of Information

The requirements of this Chapter originated in City of Seattle Ordinance 110299, effective January 23, 1982. Where used in this Chapter, the term "Building Code" shall mean the 1982 Seattle Building Code. Where used in this Chapter, the terms "this Code" and "the fire code" shall mean the 1982 Seattle Fire Code.

SECTION 9301

GENERAL

9301.1 Purpose. The main purpose of this chapter is to improve the fire and life safety of existing high-rise buildings that do not conform to current City codes so that the health, safety and welfare of the general public is provided for and promoted. It is recognized that the application of present day fire protection techniques to some existing high-rise buildings is difficult. For this reason, this chapter may permit the use of alternative methods and innovative approaches and techniques to achieve its purpose, if *approved* by the *fire code official* and the Building Official.

9301.2 Scope. This chapter applies to all high-rise buildings in existence at the time of its adoption, as well as to all high-rise buildings coming into existence after the adoption thereof.

9301.2.1 Hazards and design features. If the *fire code official* finds a condition in a high-rise building not specifically addressed in this chapter, which in the *fire code official*'s opinion makes fire escape or fire fighting unusually difficult, the *fire code official* is

authorized to declare it to be a hazard, notify the owner of such condition and order its correction in a manner consistent with these minimum safeguards.

9301.2.2 Exempt Buildings. The *fire code official* and the Director of the Department of Planning and Development may exempt high-rise buildings that meet the requirements of Section 403 of the 1982 *Seattle Building Code* from complying with the provisions of this chapter.

9301.2.3 Conflicts. If there is a conflict between the provisions of this chapter and the provisions of an ordinance or code adopted after January 23, 1982, the provisions of the later adopted ordinance or code apply.

9301.3 Definitions. For the purpose of this chapter, certain words shall be construed as specified in this section.

CENTRAL STATION: A fire alarm reporting service listed by the Underwriters Laboratories or authorized by the *fire code official* to report alarms to the Seattle Fire Department Alarm Center. In lieu of connection to a central station listed by Underwriters Laboratories, the *fire code official* may approve building staff monitoring of a fire alarm annunciator panel if:

1. Such staff are properly trained to monitor the annunciator panel and report alarm signals to the fire department alarm center via the 9-1-1 system.
2. One or more building staff is on duty 24 hours a day and remains in the direct vicinity of the annunciator panel, e.g., a hotel desk clerk if the panel is behind the registration desk.
3. Staff persons are available in low income high-rise buildings whose primary duty requires them to be at the front desk.

DEAD-END CORRIDOR: A corridor that permits only one direction of travel from a unit or normally occupied room door to an exit, or that intersects an exit corridor on one end and does not provide an exit path on the other end. A corridor that has fire escapes directly accessible from it is not a dead-end corridor.

FLOOR USED FOR HUMAN OCCUPANCY: A floor designed and intended for occupancy by one or more persons for any part of a day, including a roof garden and an active storage area. An area that is permanently unoccupied or is occupied for the service of building equipment only is not included in this definition.

HIGH-RISE BUILDING: Buildings having floors used for human occupancy located more than 75 feet above the lowest level of fire department vehicle access.

LOW INCOME RESIDENTIAL BUILDINGS: Those buildings that meet the following requirements:

1. At least 50 percent of the dwelling or housing units as defined in the Seattle Housing and Building Maintenance Code (Seattle Municipal Code Ch. 22.204) are rented to non-transient persons at a rent at or below .9% of the current median income for all families in the Seattle area as determined by the United States Department of Housing and Urban Development; and
2. The average monthly rent for all dwelling or housing units in the building does not exceed 1.4% of the Median Income Limit.

For purposes of calculating the average monthly rent, a room that is rented on a hostel-style basis to three or more non-related persons is considered as one room rented for $200 per month.

Monthly rent includes all charges for shelter and provision of items normally associated with such use, but does not include board, health care, telephone charges and other such items.

SECTION 9302

EXITS

9302.1 General. All exits in high-rise buildings shall be illuminated as required in Section 1211 of this Code and enclosed with a minimum of one-hour fire resistive construction. Every high-rise building shall have at least one such exit. If existing exterior fire escapes are used for additional exits, they shall be tested and identified as required in Section 9302.3.

9302.2 Smokeproof enclosure. Where a high-rise building has a single, enclosed exit, the enclosure shall be continued to the exterior of the building, the exit shall be smoke-proof by mechanical ventilation in accordance with Section 3310 of the 1982 *Seattle Building Code*, or mechanically pressurized with fresh air to 0.15 inches water column and shall have a concurrent 2500 cubic feet per minute (CFM) exhaust to atmosphere in an emergency, in accordance with the provisions of the Building Code.

Exceptions:

1. Pressurization may be omitted if the building has an *approved* automatic sprinkler system, all corridor openings are self-closing, all occupied areas have access to a second means of egress or a fire escape and the omission is *approved* by the *fire code official*.
2. A single stair may exit through a building lobby, if the lobby is of non-combustible construction, does not contain combustible furnishings, and is separated from the rest of the building by one-hour fire-resistive construction. Wire-glass protected by sprinklers

on both sides may be accepted as one-hour fire-resistive construction. If the lobby contains no combustible materials, wire-glass need only be protected by sprinklers on the side opposite the lobby.

9302.3 Fire Escapes. Exterior fire escapes shall be accessible and structurally safe at all times. Owners of high-rise buildings shall load test fire escapes at least once every five years with a weight of not less than 100 lb/sq. foot. The results of such a load test shall be submitted in writing to the *fire code official*. In lieu of such a test, the *fire code official* may accept the opinion of a structural engineer licensed by the State of Washington describing his inspection and/or tests and stating that the fire escape is structurally safe and will support a load of 100 lb/sq. foot. There shall be signs *approved* by the *fire code official* clearly identifying the route of access to the fire escape from every public corridor. Fire escapes that are not maintained structurally safe and not otherwise required by provisions of the Fire Code shall be removed. Locked doors or windows are prohibited between public corridors and fire escapes.

Exceptions: If all of the following criteria are met and *approved* by the *fire code official*:

1. An identified tool or device for opening the locked door or window is permanently affixed in close proximity to the locked point.
2. The area around the locked door or window is served by emergency illumination.
3. Clearly understandable directions indicating the use of the tool and the route to the fire escape are posted at the locked door or window.

9302.4 Doors. All exit doors in the path of exit travel shall be self-closing or automatic closing in accordance with Section 713.6 of the 1982 Building Code. Doors held open by fusible links, and sliding or vertical doors are prohibited in exit-ways. Stairway doors shall be self-latching.

9302.5 Unlocking of doors. Stairway doors, including the doors between any stairway and the roof, shall not have locks or shall unlock automatically whenever a fire alarm is activated in the high-rise building. Such locks shall unlock automatically when power is off (fail safe). If the only locked door in a stair shaft is the one that leads to the roof, it may be locked by panic hardware or *approved* alarm lock-paddle bars.

9302.6 Egress from stairways. Enclosed stairways serving more than six floors shall have two means of egress from the stairway. Enclosed stairways serving ten or more floors shall have re-entry into the building at approximately 5-story intervals. Re-entry signs shall be posted in the stair.

Exceptions:

1. Jails.
2. If telephones connected to a 24-hour manned location are provided in the stairway in each 5-floor increment that does not have a means of egress.
3. If any door serving as an entrance to the stair does not automatically lock behind a person entering the stair.
4. If alternate means of alerting building management to persons trapped in a stairwell are *approved* by the Building Official.

SECTION 9303

DEAD-END CORRIDORS

9303.1 Dead-end corridors. Dead-end corridors are limited to 75 feet in length in office occupancies and 30 feet in length in all other occupancies. If such limits are exceeded, automatic sprinkler protection meeting the requirements of the Fire Code and the Building Code shall be provided for the entire dead-end corridor, with one head on the room side of each door opening onto the corridor. Domestic water systems may be used to supply such sprinklers when *approved* by the *fire code official*.

Exceptions:

1. In high-rise buildings, inactive doors leading from the dead-end corridor into spaces that are not in normal use may be covered with 5/8((")))inch type "x" gypsum board or its equivalent, in lieu of installing a sprinkler head over the door or smoke detector in the room.
2. In office occupancies, sprinkler heads on the room side of each door opening onto the corridor need not be installed.
3. In residential buildings, if corridors and each guest room are equipped with electrically supervised heat detectors connected to the building fire alarm system, sprinkler heads, or any combination thereof. If heat detectors are used in rooms in lieu of sprinklers, doors must be rated at 20 minutes and must be self-closing.
4. In office occupancies, sprinkler systems are not required in a dead-end corridor if the corridor is equipped with smoke detectors and each room opening onto the corridor is

equipped with at least one smoke detector. Such detector shall be electrically supervised and connected to the building fire alarm system.

5. If there is a fire escape not directly accessible from the corridor and the exit route is protected by electrically supervised smoke detection.
6. Corridors within residential units are exempt.
7. Corridors within private offices may have corridor only smoke detection connected to the building alarm systems.

SECTION 9304

FIRE RESISTIVE CONSTRUCTION

9304.1 Fire separation. Any space larger than 1,500 square feet shall be separated from building stair shafts, elevator shafts and air handling shafts by non-combustible smoke resistive separation (glass walls with wood stops are acceptable) and equipped with smoke detectors connected to the building fire alarm system.

Exceptions:

1. Spaces that have *approved* automatic sprinkler systems.
2. Building lobbies or corridors which are equipped with an *approved* smoke control system that includes shaft pressurization and automatic smoke removal.
3. Building lobbies or corridors of any size that do not contain combustible furnishings (other than carpet) or commercial spaces and have non-combustible interior finish throughout.

NOTE: To qualify for exception 3, all spaces adjacent to the building lobby must be separated and equipped with smoke detectors as outlined in this section, and all doors leading into the lobby must be self-closing or automatically closing upon activation of the building fire alarm system.

4. Office areas above the main lobby, including open space design areas.

   NOTE: This exception does not apply to retail or wholesale stores, display rooms, restaurants, cocktail lounges and bars, banquet rooms, meeting rooms, storage rooms and spaces that, because of unusual fuel load or other conditions, pose an unusual hazard in the opinion of the *fire code official*.

5. Smoke detectors are not required in spaces that are separated by one-hour fire-resistive construction, with openings protected by one-hour self-closing doors.

Domestic water systems may be used to supply the sprinkler system referred to in this section if *approved* by the *fire code official*.

9304.2 Shaft enclosures. All openings that connect three or more floors shall be enclosed with a minimum of one-hour fire resistive construction.

Exception: Openings complying with Sections 304.6 or 402 of the 1982 Seattle Building Code.

SECTION 9305

HEATING, VENTILATION AND AIR CONDITIONING SYSTEM (HVAC) SHUTDOWN

9305.1 Air moving systems. Air moving systems that serve more than the floor on which they are located shall automatically shut down on any high-rise building fire alarm, or shall be provided with a manual shutdown switch located at the fire alarm panel in the main building lobby.

Exception: Air moving systems of:

1. Less than 2,000 CFM.
2. Exhaust only systems of less than 15,000 CFM, such as toilet, range hood, kitchen, fume hood, etc.
3. HVAC systems of less than 15,000 CFM with automatic shut-down on smoke detectors in the area served, which are connected to the building fire alarm system.
4. Life safety pressurization systems as provided in the Building Code.
5. Buildings with *approved* automatic smoke control pursuant to Section 1807 of the 1982 edition of the Seattle Building Code.

SECTION 9306

FIRE ALARM AND DETECTION SYSTEMS

9306.1 General. Every high-rise building, except a residential occupancy with a system installed under Ordinance 106107 as now or hereafter amended, shall have an electrically supervised fire alarm and detection system *approved* by the *fire code official*, as follows:

A manual pull station shall be located at every floor exit door, except in office occupancies.

The alarm system for the high-rise building shall be monitored by a central station, or other such means *approved* by the *fire code official*.

The alarm systems shall be electrically supervised and have battery emergency power sufficient to operate for a period of 24 hours and sound the alarm for 10 minutes at the end of that period.

9306.2 Automatic smoke detection. There shall be electrically supervised automatic smoke detection in elevator landings, public corridors, and on the corridor or floor side of each exit stairway.

Exception: If a corridor has an *approved* automatic sprinkler system, smoke detectors may be omitted from the corridor.

There shall be electrically supervised automatic smoke detectors within 50 feet of building perimeter walls and at standard spacing (approximately 30 feet) to the center of the floor.

Exceptions:

1. Interior of residential units.
2. Floors that have an *approved* automatic sprinkler system.
3. Parking garages.
4. Building Mechanical Spaces.
5. Any space above the top occupied floor.

9306.3 Rooms without sprinklers. There shall be electrically supervised automatic heat or smoke detection in rooms used for storage, shops, handicraft, janitor, trash and similar purposes where the fuel load may be significantly higher than the average floor fuel load and no automatic sprinkler system exists.

Exceptions:

1. Rooms with an *approved* automatic sprinkler system.
2. Rooms under 10 square feet opening onto exit corridors.
3. Rooms under 100 square feet not opening onto exit corridors.
4. Rooms within residential units.
5. Rooms where the storage is in closed metal containers.
6. Rooms other than those opening onto a corridor and within 30 ft. of an electrically supervised automatic smoke detector.

9306.4 Audibility. Alarm systems shall have audible devices producing a slow "whoop" sound audible at 15 dBA above ambient sound levels with a minimum of 60 dBA throughout residential occupancies and 10 dBA above ambient sound levels with a minimum of 55 dBA throughout other occupancies, and shall have a microphone capable of making voice announcements simultaneously to all floors.

The alarm shall sound at a minimum on the floor where the fire is occurring and the floor above, and the alarm system shall be capable of sounding a general alarm throughout the high rise building. The alarm system shall be designed so that a general alarm may be activated from two separate locations.

9306.4.1 Zones. Fire alarm systems shall be zoned per floor.

9306.4.2 Panels. There shall be an annunciator panel in the main lobby of a high rise building or in such other areas *approved* by the *fire code official* as an emergency control center.

9306.5 Automatic sprinklers. If an automatic sprinkler system has been installed for fire protection, the water flow alarm shall be connected to the building fire alarm.

Exception: Where automatic smoke detectors are installed in the area and zoned, a single water flow alarm may be used.

9306.6 Elevator shafts. For purposes of Section 9306, wiring for fire alarm and fire detection systems may be installed in elevator shafts, if:

1. Such wiring shall not interfere with the safe operation of the elevator.
2. Such wiring shall be enclosed within metal conduit and all junction boxes shall be located outside the shaft.
3. All wiring work shall be done under applicable permit obtained from the Department of Planning and Development.

9306.7 Elevator recall. A fire alarm originating on a floor other than the main lobby floor shall cause all elevators to be returned to the main floor in accordance with Chapter 30 of the 1982 *Seattle Building Code*. Whenever new elevator controllers are installed, they shall meet provisions of the current *Seattle Building* and *Elevator Codes*. Newly installed controllers shall have the capability of selecting alternate recall floors.

Exception: Freight elevators with manually operated doors.

SECTION 9307

EMERGENCY POWER

9307.1 General. High-rise buildings not meeting the Building Code in effect at the time of the original adoption of this article shall have, as a minimum, emergency power as follows:

1. Stairway pressurization emergency power shall be provided by an on-site diesel engine generator set. Such power shall start automatically on fire alarm and the generator set shall have a two-hour fuel supply.
2. Exit signs and pathway illumination shall have emergency power by trickle charged storage batteries. Such batteries shall have a capacity to provide required illumination for 90 minutes.
3. Fire alarm emergency power shall be provided as required in Section 9306.

SECTION 9308

SIGN REQUIREMENTS

9308.1 General. All signs in this section shall be *approved* by the *fire code official* and have graphic symbols if possible. In hotels, signs must have graphic symbols. Sign lettering shall follow Appendix I-C of the 1982 *Seattle Fire Code*.

A sign shall be posted on the room side of every hotel guest room indicating the relationship of that room to the exits and fire extinguishers, and giving basic information on what to do in the event of fire in the building.

9308.2 Stairs. Signs shall be provided on the stairway side of every stair door indicating the number of the stair, the floor that the door serves, the high-rise building re-entry points, and stair termination.

9308.3 Elevators. A sign shall be posted in every elevator lobby above each call switch noting that the elevators will be recalled to the building lobby on fire alarm. This sign shall warn persons not to use the elevator in the event of fire and direct them to use the stairway.

If exit signs are not clearly visible from the elevator lobby, signs shall be installed to indicate the direction to stair and fire escape exits.

9308.4 Emergency illumination. Emergency illumination shall be provided at the elevator lobby sign location.

9308.5 Exit identification. "NOT AN EXIT" signs shall be installed at all doorways, passageways, or stairways that are not exits, exit accesses or exit discharges, and that may be mistaken for an exit. A sign indicating the use of the doorway, passageway, or stairway, such as "to basement," "storeroom," or "linen closet," is permitted in lieu of the "NOT AN EXIT" sign.

SECTION 9309

EMERGENCY PREPAREDNESS

9309.1 Emergency plan. Owners of high-rise buildings shall prepare an emergency operations plan in accordance with Section 403 of the 1982 Seattle Building Code. In addition to the requirements of Section 403 of the 1982 Seattle Building Code, the emergency operations plan shall specify the duties during a fire emergency of the building management and staff, the building fire safety directors and floor wardens as identified in Section 9309.2.

9309.2 Building staff training. Owners of high-rise buildings shall designate from existing staff a building fire safety director who shall be responsible for the operation of the building fire protection equipment. Owners of high-rise buildings and/or tenants employing over 100 persons shall designate a floor warden for each floor to be responsible for evacuating the people on their respective floors in emergencies. The names and work locations of the director and the floor wardens shall be maintained on a roster contained in the building emergency operations plan.

Exceptions:

1. Residential condominiums and apartment occupancies not employing staff.
2. Office and retail occupancies after normal business hours.

NOTE: In residential buildings employing staff, if there are not enough staff to appoint a floor warden for each floor, wardens shall be appointed to the fire floor, the floor above and as many additional floors as possible. In buildings where only one staff person is available, that person will be the Fire Safety Director.

9309.3 Fire drills. The staff of high-rise buildings shall conduct, and the occupants thereof shall participate in, fire drills on a regular basis as established in Chapter 4 of the 2009 Seattle Fire Code.

Section 31. A new Chapter 94 is adopted as follows:

CHAPTER 94

FIRE PROTECTION FOR COVERED BOAT MOORAGE

Chapter 94 Point of Information

The requirements of this chapter originated in City of Seattle Ordinance 121773, effective may 18, 2005. The requirements of this ordinance apply to all covered moorage marina facilities inexistence on the effective date of May 18, 2005.

SECTION 9401

GENERAL

9401.1 Scope. This chapter applies to covered portions of all marinas with covered boat moorage in existence at the time of its adoption.

Exceptions:

1. *Approved* designated facilities and shipyards in accordance with Administrative Rule 26.02.04, *Designated Hot Work Facilities and Shipyards*.
2. Boathouses.

9401.2 Intent. This Chapter is intended to promote the health, safety and welfare of life and property from fire at covered boat moorage.

9401.3 Modifications. The retroactive requirements of this chapter may be modified if their application clearly would be impractical for economic or physical reasons in the judgment of the *fire code official*, and only if it is clearly evident that a reasonable degree of safety is provided.

9401.4 Signage. Conspicuous signage shall be located at the fire apparatus access road termination point and the shore end of piers, wharves and floats. Signage shall indicate the address, directions and maps if required by the *fire code official*. For those structures that are designed to support vehicles, signage shall indicate the weight limit. Numbers and letters shall be easily legible and have high contrast with the color of the sign background. Numbers and letters shall not be less than 5 inches (127 mm) in height and shall have a minimum stroke of 0.5 inches (12.7 mm).

9401.5 Smoking Restrictions. Smoking is prohibited in all areas where fuels and other flammable and combustible liquids and gases are stored or dispensed, in battery rooms, and in

other such locations as management or the *fire code official* designate. "No Smoking" signs shall be conspicuously posted.

9401.6 Transmittal of Fire Emergency. All marinas and boatyards shall have a means to notify the fire department rapidly in the event of an emergency. If a telephone is used for this purpose, it shall be available for use at all times and shall not require the use of a coin. The street address of the facility and the emergency telephone number(s) shall be displayed prominently on a sign at the telephone.

9401.7 Labeling electrical shutoffs. Electrical transformers, control panels, and breaker panels shall be readily accessible, clearly labeled and indicate the areas they service. See also SFC 605.3.

9401.8 Fire extinguishers. One portable fire extinguisher having a minimum rating of 2A 20-BC shall be provided within 75 feet (22,860 mm) of all portions of piers, wharves, and floats, or at each required hose station. Additional fire extinguishers, suitable for the hazards involved, shall be provided and maintained in accordance with SFC 906 and NFPA Standard 10.

SECTION 9402

DEFINITIONS

9402.1 Definitions. The following words and terms shall, for the purposes of this chapter, have the meanings shown here.

BERTH is the water space to be occupied by a boat or other vessel alongside or between bulkheads, piers, piles, fixed and floating docks, or any similar access structure. (See also definition for Slip.)

BOATHOUSE is an independently floating structure designed to be moored to a main float system to enclose and protect a vessel or vessels. A boathouse is capable of being moved on water, but is typically moored to a float system for long periods of time.

COVERED BOAT MOORAGE is a pier or system of floating or fixed accessways to which vessels on water may be secured and is covered by a roof.

DRAFT CURTAIN. A structure arranged to limit the spread of smoke and heat along the underside of the ceiling or roof.

FIRE PARTITION is a vertical assembly of materials designed to restrict the spread of fire in which openings are protected.

FLOAT is a floating structure normally used as a point of transfer for passengers and goods, or both, for mooring purposes.

GRAVITY-OPERATED DROP OUT VENTS. Automatic smoke and heat vents containing heat-sensitive glazing designed to shrink and drop out of the vent opening when exposed to fire.

MARINA is any portion of the ocean or inland water, either naturally or artificially protected, for the mooring, servicing, or safety of vessels and includes artificially protected works, the public or private lands ashore, and structures or facilities provided within the enclosed body of water and ashore for the mooring or servicing of vessels or the servicing of their crews or passengers.

MARINE MOTOR FUEL-DISPENSING FACILITY. That portion of property where flammable or combustible liquids or gases used as fuel for watercraft are stored and

dispensed from fixed equipment on shore, piers, wharves, floats, or barges into the fuel tanks of watercraft and includes all other facilities used in connection therewith.

PIER is a structure, usually of greater length than width, of timber, stone, concrete or other material, having a deck and projecting from the shore into waters so that vessels may be moored alongside for loading, unloading, storage, repairs or commercial uses.

SLIP is a berthing space between or adjacent to piers, wharves, or docks; the water areas associated with boat moorage. (See also definition for Berth.)

WHARF OR QUAY is a structure of timber, stone, concrete or other material having a platform built along and parallel to waters so that vessels may be moored alongside for loading, unloading, storage, repairs or commercial uses.

SECTION 9403

PLANS AND APPROVALS

9403.1 Plans. Plans for marina fire-protection shall be *approved* prior to installation. The work shall be subject to final inspection and approval after installation.

SECTION 9404

ACCESS AND WATER SUPPLY

9404.1 Fire apparatus access roads. Fire apparatus access roads shall be provided and so located as to provide fire department apparatus access to within 150 feet (45,720 mm) travel distance to the shore end of all marina piers, wharves, and floats. Fire apparatus access roads shall be in accordance with Appendix D of the 2003 Seattle Fire Code.

Exception: If *approved* by the *fire code official*, a Class I standpipe system may be installed on piers, wharves, or floats if conditions are such that providing fire department access lanes to within 150 feet (45,720 mm) to the shore end of the piers, wharves, and floats is not practical. Additional standpipe requirements are found in SFC 9405.1.

9404.2 Premises access. The fire department shall have access to fenced, gated, or locked grounds, piers, wharves or floats. Appropriate means of access (including keys and cardkeys) shall be provided in an *approved* secured lock box (Knox Box) on the premises in an *approved* location. The fire department shall be notified immediately of any changes in the means of access.

9404.3 Fire hydrants. At least two fire hydrants shall be provided. One hydrant shall be located within 500 feet (152,400 mm) of the closest point of fire department apparatus access to the shore end of the marina piers, wharves or floats, or to the fire department connection (FDC) for those piers, wharves or floats that are equipped with standpipes. The second fire hydrant shall be located within 1000 feet (304,800 mm) of the closest point of fire department apparatus access to the shore end of the marina piers, wharves, or floats, or to the FDC for those piers, wharves or floats that are equipped with standpipes.

Exception: The requirements for fire hydrants may be modified if alternate arrangements are *approved* by the *fire code official*.

9404.4 Water supply. All required hydrants shall be capable of delivering not less than 1,000 gpm at a minimum residual pressure of 20 psi each.

Exception: The requirements for water supply may be modified if alternate arrangements are *approved* by the *fire code official*.

SECTION 9405

FIRE PROTECTION EQUIPMENT

9405.1 Standpipe systems. A manual Class I standpipe system (or class III standpipe system if *approved* by the *fire code official*) in accordance with NFPA Standard 14 shall be provided for piers, wharves, and floats if the hose lay distance from the fire apparatus to the most remote accessible portion of the pier, wharf, or float exceeds 150 feet (45,720 mm). *Approved* plastic pipe may be used if installed underwater, or other *approved* method of protection from fire is provided. The standpipe piping shall be a minimum of 4 inches (102 mm), sized to provide a minimum of 500 gpm at 130 psi at the most remote hose connection, with a simultaneous flow of 500 gpm at the third most remote hose connection on the same pier while maintaining a maximum system pressure of 175 psi. Existing standpipe systems providing equivalent performance to the specification listed above may be acceptable if *approved* by the *fire code official*.

9405.1.1 Hose connections. Hose connections on required standpipes shall be provided at the water end of the pier, wharf, or float, and along the entire length of the pier, wharf, or float at spacing not to exceed 150 feet (45,720 mm) and as close as practical to the land end.

Exception: The hose connection at the land end of the pier, wharf or float may be omitted if a hose connection is located within 150 feet (45,720 mm) of the fire apparatus access road.

Each hose connection shall consist of a valved 21/2-inch (64 mm) fire department hose outlet. Outlet caps shall have a predrilled 1/8-inch (3.2 mm) hole for pressure relief and be secured with a short length of chain or cable to prevent falling after removal. Listed equipment shall be used.

9405.2 Automatic sprinkler systems. Automatic sprinklers shall be provided for each separate covered boat moorage area exceeding 8,000 sq. ft. (743 m2) in projected roof area, excluding roof overhangs. A separate covered boat moorage area is one that has at least 16 feet uncovered horizontal separation from any part of any adjacent covered boat moorage area.

The sprinkler system shall be designed and installed in accordance with NFPA Standard 13 for Extra Hazard Group 2 occupancy.

Exception: Covered boat moorage already protected by an automatic sprinkler system is not required to be upgraded to Extra Hazard Group 2 criteria.

9405.2.1 Monitoring. Sprinkler systems shall be monitored by an *approved* central station.

9405.3 Smoke and heat vents: *Approved* automatic smoke and heat vents shall be provided in covered boat moorage areas exceeding 2,500 sq. ft. (232 m2) in area, excluding roof overhangs.

Exception: Smoke and heat vents are not required in areas protected by automatic sprinklers.

9405.3.1 Design and installation. If smoke and heat vents are required they shall be installed near the roof peak, evenly distributed and arranged so that at least one vent is over each covered berth. The effective vent area shall be calculated using a ratio of one square foot

of vent to every 15 square feet of covered berth area (1:15). Each vent shall provide a minimum opening size of 4 ft. x 4 ft.

9405.3.1.1 Smoke and heat vents shall operate automatically by actuation of a heat-responsive device rated at between 100 degrees F (56 degrees C) and 220 degrees F (122 degrees C) above ambient.

Exception: Gravity-operated drop out vents.

9405.3.1.2 Gravity-operated drop out vents. Gravity operated dropout vents shall fully open within 5 minutes after the vent cavity is exposed to a simulated fire represented by a time-temperature gradient that reaches an air temperature of 500 degrees F (260 degrees C) within 5 minutes.

9405.4 Draft curtains. Draft curtains shall be provided in covered boat moorage areas exceeding 2,500 sq. ft. (232 m2) in area, excluding roof overhangs.

Exception: Draft curtains are not required in areas protected by automatic sprinklers.

9405.4.1 Draft curtain construction. Draft curtains shall be constructed of sheet metal, gypsum board or other *approved* materials that provide equivalent performance to resist the passage of smoke. Joints and connections shall be smoke tight.

9405.4.2 Draft curtain location and depth. The maximum area protected by draft curtains shall not exceed 2,000 sq. ft. (186 m2) or two slips or berths, whichever is smaller. Draft curtains shall not extend past the piling line. Draft curtains shall have a minimum depth of 2 feet (609 mm) below the lower edge of the roof and shall not extend closer than 8 feet (2438 mm) to the walking surface on the pier.

9405.5 Fire department connections. Standpipe and sprinkler systems shall be equipped with not less than one two-way 21/2-inch (64 mm) fire department connection (FDC), which shall be readily visible and located at the fire apparatus access road or other *approved* location. The FDC for class I standpipe systems may be located at the shore end of the pier, wharf, or float if the distance between the fire apparatus access road and FDC is less than 150 feet (45,720 mm). See also SFC 9404.3 Fire hydrants.

9405.6 Marina fire protection confidence testing. Standpipe and sprinkler systems shall be inspected and hydrostatically tested at least annually. Reports of inspections and tests shall be submitted to the Seattle Fire Department Confidence Testing Unit in accordance with Administrative Rule 9.02.07 *Confidence Test Requirements for Life Safety Systems.* Notwithstanding fire department inspections, maintenance and periodic testing are the owner's responsibility. All persons performing such work shall have a certificate from the fire department to perform such work. See Administrative Rule 9.01.07 *Certification for Installing, Maintaining and Testing Life Safety Systems and Equipment*.

9405.7 Moorage in intervening moorage space. Vessels moored in open spaces between covered moorage shall not exceed 7 feet (2,133.6 mm) from the top of the vessel superstructure to the waterline, unless protected by an *approved* fire partition.

SECTION 9406

EMERGENCY PLANS AND TRAINING

9406.1 Emergency plan. Owners or operators of piers, wharves, floats and marinas shall prepare and maintain a current emergency plan for the facility. The plan shall include procedures for fire

department notification, fire evacuation, and include location of portable fire extinguishers and hose cabinets, sprinkler and standpipe system control valves, fire department connections and electrical disconnects.

9406.2 Signage. Signs, posters, or posted instructions shall be provided where practicable to remind the public of basic fire safety practices and to warn of unusual or extreme fire hazards. All boat owners at the marina shall be provided with written instructions for reporting fires and other emergencies and actions to be taken in the event of a fire.

9406.2 Point of Information

For examples of emergency plans, see information bulletins located at www.seattle.gov/fire titled Emergency Procedures for Public Occupancies and Fire Evacuation Planning.

9406.3 Employee training. Practice drills shall be held a minimum of twice a year.

9406.3.1 All employees shall know the location of fire-fighting equipment, and shall be instructed in the procedures for response to a fire or other emergency, response to a fire alarm, reporting a fire or other emergency to the proper authorities (and to designated facility employees), and in the employees' designated role(s) in emergency situations. See SFC 9406.

9406.3.2 All employees, including office personnel, shall be given training in the use of portable fire extinguishers.

9406.4 Fire department liaison. If requested by the Seattle Fire Department, management shall assist the fire department in pre-fire planning for the following:

(1) Entries and access routes for equipment within the premises,

(2) Location, construction, use, and accessibility of all buildings and all their subdivisions including basements, storage lockers, and other areas,

(3) Location and extent of outside working areas,

(4) Location and means of access to both dry and wet boat-storage areas,

(5) Type and capacity of standpipes on piers and walkways, including all points where connection of hydrant or pumper supplies can be affected,

(6) Types and capacities of facility equipment, including work or tow boats, portable pumps, pier-mounted hose cabinets, all portable fire extinguishers, and other equipment,

(7) Voltages and capacities of electrical systems, and location of electrical disconnecting means.

SECTION 9407

OPERATIONAL HAZARDS

9407.1 The marina or boatyard operator shall post in a prominent location or provide to boat operators using a marina or boatyard for mooring, repair, servicing, or storage, a list of safe operating procedures containing the following:

(1) Procedures for disposal of trash;

(2) Location of nonsmoking areas;

(3) Location of fire extinguishers and hoses;

(4) Procedures for turning in a fire alarm; and

(5) Fueling procedures.

9407.2 Fueling Operations. Fueling of floating marine craft with Class I fuels at other than a marine motor fuel-dispensing facility is prohibited. Fueling of floating marine craft with Class II or III fuels at other than a marine motor fuel-dispensing facility shall be in accordance with SFC 2210.4.

SECTION 9408

COMPLIANCE

9408.1 Compliance. All corrections that may be necessary to provide the minimum fire safety requirements established in this Chapter shall be completed by the owners as follows:

(a) The *fire code official* shall develop a procedure for surveying marinas to effect compliance with this Chapter. The *fire code official* shall send written and signed notices to the owners of all non- complying marinas. Within 120 days of the date of notification by the *fire code official*, the owner shall submit to the *fire code official* a concept design and firm schedule for complying with the requirements of this chapter.

(b) The *fire code official* shall review the concept design and firm schedule and respond in writing. The time schedule for compliance shall be measured from the date of the *fire code official*'s response to the concept design and firm schedule for each marina, and shall not exceed the time limits set forth in subsection (c) of this section.

(c) The time limits for complying with the requirements of this Chapter are as follows:

Fire Extinguishers	1 year

Signage	1 year
Emergency Plan	1 year
Smoke and Heat Vents and Draft Curtains	7 years
Fire Hydrants	5 years
Standpipes	7 years
Sprinkler Systems	10 years

(d) Marinas will not be deemed to be in violation of this Chapter until the time limits set forth in subsection (c) above have expired. Appeals to compliance with this section shall be in accordance SFC 108.

Section 32. Appendix B of the 2012 International Fire Code is amended as follows:

B101.1 Scope. The procedure for determining fire-flow requirements for buildings or portions of buildings hereafter constructed <u>or when required by the fire code official for buildings undergoing a substantial alteration</u> shall be in accordance with this appendix. This appendix does not apply to structures other than buildings.

***

SECTION B103

MODIFICATIONS

<u>**B103.4 Deferment.** The *fire code official* is authorized to defer enforcement of fire flow requirements to allow time for infrastructure upgrades to occur. Temporary mitigation measures</u>

as approved by the fire code official may be required for projects in areas with deficient fire flow.

***

SECTION B105

FIRE-FLOW REQUIREMENTS FOR BUILDINGS

B105.1 One- and two-family dwellings and townhouses. The minimum fire-flow and flow duration requirements for one- and two-family *dwellings* and townhouses having a fire-flow calculation area that does not exceed 3,600 square feet (344.5m2) shall be 1,000 gallons per minute (3785.4 L/min) for 1 hour. Fire-flow and flow duration for dwellings and townhouses having a fire-flow calculation area in excess of 3,600 square feet (344.5m2) shall not be less than that specified in Table B105.1.

Exception: A reduction in required fire-flow ((~~of 50 percent,~~)) as *approved* by the *fire code official*, is allowed when the building is equipped with an *approved automatic sprinkler system*.

B105.2 Buildings other than one- and two-family dwellings and townhouses. The minimum fire-flow and flow duration for buildings other than one- and two-family *dwellings* and townhouses shall be as specified in Table B105.1.

***

Section 33. Appendix D of the 2009 International Fire Code is amended as follows:

APPENDIX D

FIRE APPARATUS ACCESS ROADS

The provisions contained in this appendix are not mandatory unless specifically referenced in the adopting ordinance.

SECTION D101

GENERAL

D101.1 Scope. Fire apparatus access roads other than public streets shall be in accordance with this appendix and all other applicable requirements of the *International Fire Code*.

SECTION D102

REQUIRED ACCESS

D102.1 Access and loading. Facilities, buildings or portions of buildings hereafter constructed, substantially altered or moved into or within the jurisdiction when required by the fire code official shall be accessible to fire department apparatus by way of an *approved* fire apparatus access road with an asphalt, concrete or other *approved* driving surface capable of supporting the imposed load of fire apparatus weighing at least 75,000 pounds (34 050 kg).

SECTION D103

MINIMUM SPECIFICATIONS

***

D103.3((4)) Dead ends. Dead-end fire apparatus access roads in excess of 150 feet (45 720 mm) shall be provided with width and turnaround provisions in accordance with Table D103.3((**4**)) and Figure D103.3.

TABLE D103.3((4))

REQUIREMENTS FOR DEAD-END FIRE

APPARATUS ACCESS ROADS

[Table D103.4 not reproduced here. No amendments are proposed for the table, other than renumbering (editorial) to reflect Section D103.3 which it supports.]

***

FIGURE D103.3

DEAD-END FIRE APPARATUS ACCESS ROAD TURNAROUND

96 Foot Cul-de-sac

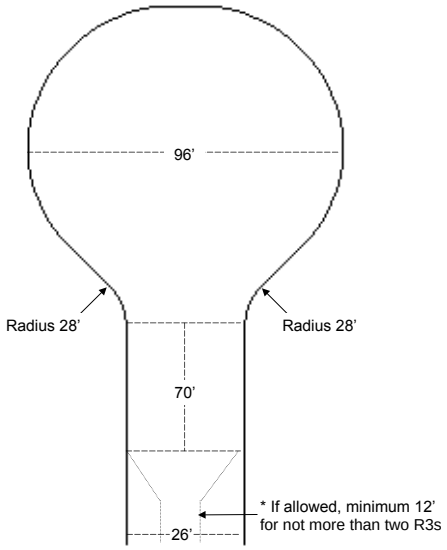

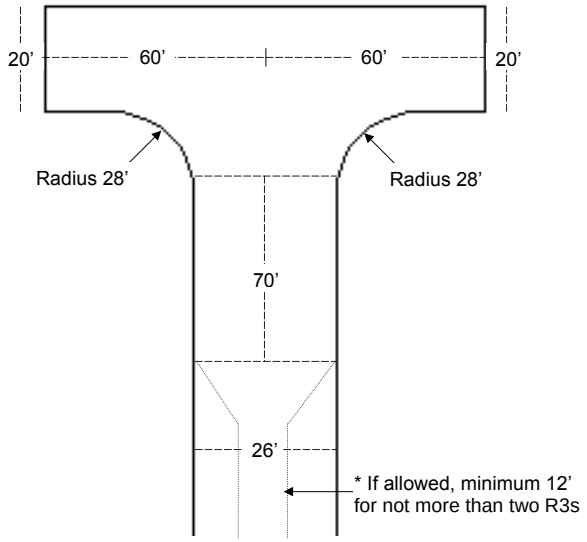

120 Foot Hammerhead

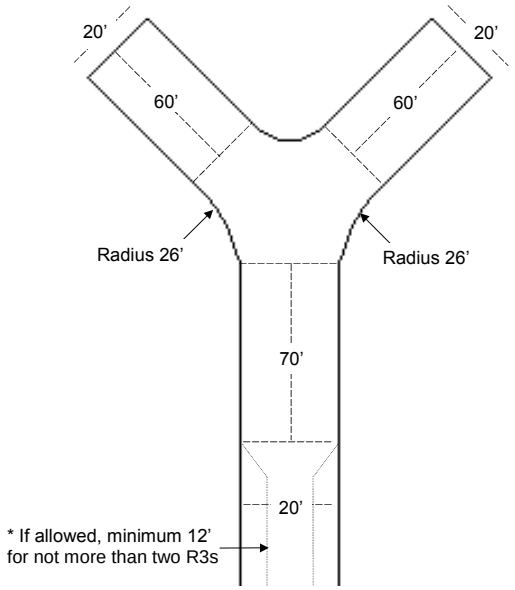

60 Foot Y – Acceptable Alternative to 120 Foot Hammerhead

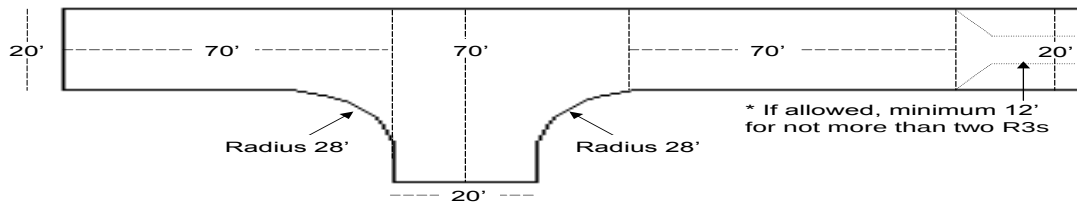

Acceptable Alternative to 120 Foot Hammerhead

D103.4((~~5~~)) Fire apparatus access road gates. Gates securing the fire apparatus access roads shall comply with all of the following criteria:

1. The minimum gate width shall be 20 feet (6096 mm).

   Exception: Access roads serving not more than two Group R-3 or Group U occupancies shall have an unobstructed width of not less than 12 feet.

2. Gates shall be of the swinging or sliding type.
3. Construction of gates shall be of materials that allow manual operation by one *person*.
4. Gate components shall be maintained in an operative condition at all times and replaced or repaired when defective.
5. Electric gates shall be equipped with a means of opening the gate by fire department personnel for emergency access. Emergency opening devices shall be *approved* by the *fire code official*.

6. Manual opening gates shall not be locked with a padlock or chain and padlock unless they are capable of being opened by means of forcible entry tools or when a key box containing the key(s) to the lock is installed at the gate location.
7. Locking device specifications shall be submitted for approval by the *fire code official*.

   Exception: Bollards are an approved alternate if they can be readily removed by one person, and they shall not be locked with a padlock or chain unless they are capable of being removed by means of a forcible entry tool or approved locking device.
8. Electric gate operators, where provided, shall be *listed* in accordance with UL 325.
9. Gates intended for automatic operation shall be designed, constructed and installed to comply with the requirements of ASTM F 2200.

D103.5((~~6~~)) Signs. Where required by the *fire code official*, fire apparatus access roads shall be marked with permanent NO PARKING—FIRE LANE signs complying with Figure D103.5((~~6~~)). Signs shall have a minimum dimension of 12 inches (305 mm) wide by 18 inches (457 mm) high and have red letters on a white reflective background. Signs shall be posted on one or both sides of the fire apparatus road as required by Section D103.5((~~6~~)).1 or D103.5((~~6~~)).2.

FIGURE D103.5((~~6~~))

FIRE LANE SIGNS

[Figure D103.6 not reproduced here. No amendments are proposed for the FIGURE, other than renumbering (editorial) to reflect Section D103.5 which it supports.]

***

D103.5((~~6~~)).1 Roads 12((~~20~~)) to 26 feet in width. Fire apparatus access roads 12((~~20~~)) to 26 feet wide (6096 to 7925 mm) shall be posted on both sides as a *fire lane*.

D103.5((~~6~~)).2 Roads more than 26 feet in width. Fire apparatus access roads more than 26 feet wide (7925 mm) to 32 feet wide (9754 mm) shall be posted on one side of the road as a *fire lane*.

SECTION D104

COMMERCIAL AND INDUSTRIAL DEVELOPMENTS

D104.1 Buildings exceeding three stories or 30 feet in height. Buildings or facilities exceeding 30 feet (9144 mm) or three stories in height shall have at least two means of fire apparatus access for each structure.

Exception: Projects that have a single approved fire apparatus access road when all buildings are equipped throughout with approved automatic sprinkler systems.

SECTION D105

AERIAL FIRE APPARATUS ACCESS ROADS

D105.1 Where required. Buildings or portions of buildings or facilities exceeding 30 feet (9144 mm) in height above the lowest level of fire department vehicle access shall be provided with *approved* fire apparatus access roads capable of accommodating fire department aerial apparatus. Overhead utility and power lines shall not be located in areas between the access road and the buildings or portions of buildings that would impede safe deployment of the aerial ladders.((~~within the aerial fire apparatus access roadway.~~))

Exceptions:

1. Buildings that are equipped throughout with an approved automatic sprinkler system.

2. One and two family dwellings and townhouses.

***

Section 40. The National Fire Protection Association (NFPA) Standard 130, Standard for Fixed Guideway Transit and Passenger Rail Systems, 2010 edition, is amended as follows:

CHAPTER 1 ADMINISTRATION

***

1.3.4 This standard ((~~shall apply~~)) applies as a basis for fixed guideway transit and passenger rail systems ((~~where~~)) if nonelectric and combination electric/other (such as diesel) vehicles are used. ((~~Where~~)) If such vehicles are not passenger-carrying vehicles or are buses((-or ((~~trolley coaches~~)) street cars, the standard ((~~shall~~)) does not apply to those vehicles, but ((~~shall~~)) does apply to the fixed guideway transit and passenger rail system in which such vehicles are used.

***

CHAPTER 3 DEFINITIONS

***

3.2.2* Authority Having Jurisdiction (AHJ). ~~An organization, office, or individual responsible for enforcing the requirements of a code or standard, or for approving equipment, materials, an installation, or a procedure.~~ The fire chief or other designated authority charged with the administration of the fire code, or a duly authorized representative.

***

CHAPTER 4

GENERAL

***

4.4.1 Emergency power assumptions. The emergency power requirements addressed in this standard assume a fire or other emergency event within the station or trainway concurrent with a power outage of the primary source of electrical power unrelated to the event within the transit system.

***

4.6* Fire Scenarios. Design scenarios shall consider the location and size of a fire or a fire-related emergency and shall be *approved*.

***

CHAPTER 5

STATIONS

***

5.1.1.1.1 Fixed guideway transit and passenger rail stations are classified as Group A, Division 3 occupancies in accordance with the 2012 *Seattle Building Code* and 2012 *Seattle Fire Code*.

5.1.1.1.2 Enclosed fixed guideway transit and passenger rail stations shall be posted with the occupancy load in accordance with Section 1004.3 of the 2012 *Seattle Fire Code*.

***

5.1.1.4 Fixed guideway transit and passenger rail stations shall comply with the applicable provisions of Section 1113 of the 2012 *Seattle Building Code*.

***

5.2.1 Safeguards During Construction. During the course of construction or major modification of any structure, provisions of ((~~NFPA 241,*Standard for Safeguarding Construction, Alteration, and Demolition Operations*~~)) Chapter 33 of the 2012 *Seattle Fire Code* and Chapter 33 of the 2012 *Seattle Building Code* ((~~shall~~)) apply.

***

5.2.2.1 Building construction for all new enclosed stations shall be not less than Type I or Type II or combinations of Type I and Type II noncombustible construction as defined in ((~~NFPA 220, in accordance with the requirements of NFPA *101*, Chapter 12~~)) Chapter 6 of the 2012 *Seattle Building Code*, for the station configuration, or as determined by ((an engineering)) a fire hazard analysis of potential fire exposure hazards to the structure.

5.2.2.2 Other types of construction ((~~as defined in NFPA 220 shall be~~)) are permitted for open stations in accordance with the provisions of ((~~NFPA*101*, Chapter 12~~)) Chapter 6 of the 2012 *Seattle Building Code*, for corresponding station configurations.

***

5.2.3.1.1* Stair and Escalator Enclosure. Stairs and escalators regularly used by passengers for circulation during normal revenue service in enclosed stations equipped throughout with an automatic sprinkler system ((~~shall not be~~)) are not required to be enclosed if the station is constructed in accordance with Chapter 7 of the 2012 *Seattle Building Code*. All required exit stairs shall be enclosed in accordance with Chapter 10 of the 2012 *Seattle Building Code*.

***

5.2.3.3 ((~~**Ancillary**~~)) **Accessory Spaces.** Fire resistance ratings of separations between ((~~ancillary~~)) accessory occupancies shall be established ((~~as required by NFPA *101*~~)) in accordance with ((~~NFPA 251~~)) Chapter 7 of the 2012 *Seattle Building Code*.

***

5.3.1 Smoke control system. A smoke control system shall be provided in underground fixed guideway transit and passenger rail stations in accordance with Section 909 of the 2012 *Seattle Fire Code*. Smoke control shall restrict movement of smoke to the general area of fire origin and non-occupied exhaust areas and maintain tenability in the means of egress.

***

5.4.11* Emergency Power Supply System (EPSS). ((~~Emergency power~~)) A Class 2 , Type 60, Level 1 Emergency Power Supply System (EPSS) in accordance with Article 700 of *NFPA 70*, and Chapter 4 of NFPA 110 shall be provided for underground and enclosed stations.

***

5.4.11.4 The following systems shall be connected to the emergency power supply system:

(((~~(1)Emergency lighting~~

~~(2)Protective signaling systems~~

~~(3)Emergency communication system~~

~~(4)Fire command center~~))

(1) Exit signs and means of egress illumination

(2) Elevator car lighting.

(3) Emergency voice/alarm communications systems.

(4) Automatic fire detection systems.

(5) Fire alarm systems.

(6) Power and lighting for the fire command center.

(7) Lighting for mechanical rooms containing critical equipment.

(8) Electrically powered fire pumps.

(9) Ventilation and automatic fire detection equipment for smoke proof enclosures.

(10) Smoke control systems.

(11) A selected elevator in each bank of elevators in accordance with *Seattle Building Code* Section 3016.7. A bank of elevators is a group of elevators or a single elevator controlled by a common operating system—all elevators that respond to a single call button constitute a bank of elevators. All elevators shall be transferable to emergency power.

***

5.5.1 General. The provisions for means of egress for a station shall comply with ((C~~hapter 7 and Chapter 12 of NFPA 101~~)) Chapter 10 of the 2012 *Seattle Building Code*, except as herein modified.

***

5.5.1.3.3 Every required stairway in enclosed stations serving floor levels more than 30 feet (9144 mm) below its level of exit discharge, except those regularly used by passengers shall comply with the requirements for a smokeproof enclosure in Section 1020.1.7 of the 2012 *Seattle Building Code*.

***

5.5.5.1 The occupant load for a station shall be based on whichever is greater:

(1) ((~~t~~)) The train load of trains simultaneously entering the station on all tracks in normal traffic direction plus the simultaneous entraining load awaiting a train or;

(2) The number of occupants computed at the rate of one occupant per unit of area as follows:

- 7 sq. ft. for stations serving event venues or dense neighborhoods
- 15 sq. ft. for outlying stations serving less dense populations.

***

5.5.5.5 ((~~Where~~)) If an area within a station is intended for use by other than passengers or employees, the occupant load for that area shall be determined in accordance with the provisions of ((~~NFPA *101*~~)) Chapter 10 of the 2012 *Seattle Building Code* as appropriate for the class of occupancy.

***

5.5.6.1 Platform Evacuation Time. There shall be sufficient egress capacity to evacuate the platform occupant load as defined in 5.5.2.8 from the station platform in 4 minutes or less, but in no case shall the required egress width (excluding escalators) be less than prescribed by Section 1005 of the 2012 *Seattle Building Code*.

***

5.5.6.3.2.4* Escalators ((~~shall not~~)) may account for ((~~more than~~)) up to one half of the required means of egress capacity at any one level for purposes of calculating platform evacuation time if the following criteria are met:

(1) The escalators are capable of being remotely brought to a stop in accordance with the requirements of 5.5.2.1(3)(b), 5.5.2.1(4), and 5.5.2.1(5).

(2) A portion of the means of egress capacity from each station level is comprised of stairs.

5.5.6.3.2.5 ((~~Escalators shall be permitted to account for more than one-half of the required means of egress capacity at any one level where the following criteria are met:~~

~~(1) The escalators are capable of being remotely brought to a stop in accordance with the requirements of 5.5.2.1(3)(b), 5.5.2.1(4), and 5.5.2.1(5).~~

~~(2) A portion of the means of egress capacity from each station level is comprised of stairs.~~

~~(3)~~)) For enclosed stations, at least one enclosed exit stair or exit passageway shall provide continuous access from the platforms to the public way.

((~~5.5.6.3.3 Elevators.~~

~~**5.5.6.3.3.1** Elevators meeting the requirements of sections 5.5.6.3.3.2 through 5.5.6.3.3.4 shall be permitted to account for part of the means of egress capacity in stations.~~

~~**5.5.6.3.3.2 Capacity and Numbers.** Where elevators are counted as contributing to the means of egress capacity, the following shall apply:~~

~~(1)They shall comprise no more than 50 percent of the required egress capacity.~~

~~(2)*At least one elevator shall be considered out of service, and one elevator shall be reserved for fire service.~~

~~(3)*The capacity of each elevator shall be the carrying capacity of the elevator within 30 minutes.~~

~~**5.5.6.3.3.3 Holding Area.** Elevators counted as contributing to the means of egress capacity shall be accessed via holding areas or lobbies that shall be designed as follows:~~

~~(1)The holding areas or lobbies shall be separated from the platform by a smoke-tight fire separation having a fire resistance rating of at least 1 hour, but not less than the time required to evacuate the holding area occupant load.~~

~~(2)At least one stair shall be accessible from the holding area.~~

~~(3)The holding area shall be sized to accommodate one person per 0.46 m2 (5 ft2).~~

~~(4)If the holding area includes portions of the platform, the area within 460 mm (18 in.) of the trainway shall not be considered in the calculation.~~

~~(5)Upon activation of smoke control in the platform or adjacent trainway areas, the holding area shall be pressurized to a minimum of 25 Pa (or 0.051 in. of water gauge).~~

~~(6)The holding area shall be provided with emergency voice alarm devices with two-way communication to the system operations control center.~~

~~**5.5.6.3.3.4 Design Features**. Elevators counted as contributing to the means of egress capacity shall be designed as follows:~~

~~(1)Shaft enclosures shall be constructed as smoketight fire separations having a 2-hour fire resistance rating.~~

~~(2)*The design shall limit water flow into the shaft.~~

~~(3)No more than two elevators used for means of egress or fire department access shall share the same machine room.~~

~~(4)Machine rooms shall be separated from each other by fire separations having a minimum fire resistance rating of 2 hours.~~

~~(5)The elevators shall be connected to emergency power.~~

~~(6)*During emergency evacuation, the elevators shall travel only between the incident platform level and a point of safety.~~))

***

5.5.6.3.4.3 Emergency exit gates shall ((~~be in accordance with NFPA *101*.~~)) comply with Chapter 10 of the 2012 *Seattle Building Code*. and maintain the clear width of the exit walkway.

***

5.5.6.3.5.2 Turnstile-type fare collection equipment shall be permitted in accordance with ((~~NFPA *101*~~)) Chapter 10 of the 2012 *Seattle Building Code* and shall account for a capacity of 25 ppm for egress calculations.

***

5.6.1 Stations shall be provided with a system of emergency lighting in accordance with ((~~NFPA *101* ,~~)) Section 1006 of the 2012 *Seattle Building Code*, except as otherwise noted herein.

5.6.2 Means of egress shall be provided with a system of emergency lighting in accordance with ((~~Section 7.9 of NFPA *101*~~)) Chapter 10 of the 2012 *Seattle Building Code*, except as otherwise noted in this standard.

***

5.7.3.1 An automatic sprinkler ((~~protection~~)) system shall be provided ((~~in~~)) throughout all areas of enclosed fixed guideway transit and passenger rail stations ((~~used for concessions, in storage areas, in trash rooms, and in the steel truss area of all escalators and other similar areas with combustible loadings, except trainways~~.

~~**5.7.3.1.1** Sprinkler protection shall be permitted to be omitted in areas of open stations remotely located from public spaces.~~))

***

5.7.3.4 Other fire suppression systems, if *approved*, ((~~shall be permitted to~~)) may be substituted for automatic sprinkler systems ((~~in the areas listed in 5.7.3.1~~)).

***

5.7.4.1 A Class I ((~~or Class III~~)) standpipe((~~s~~)) system shall be installed in enclosed stations and elevated transit stations in accordance with NFPA 14 except as modified herein.

***

5.7.4.1.2 Fire department connections for fire department use in supplying the standpipe system shall be located in accordance with Seattle Fire Department Administrative Rule 9.03.09, *Automatic Sprinkler and Standpipe Systems* and any future revisions of this rule adopted by the *fire code official.*

***

5.7.4.2.1 Hydraulic design information signs shall be provided at each fire department connection indicating the residual inlet pumping pressure(s) required for the hydraulically most remote and/or other selected hose connection outlet location(s).

***

5.7.6.1 ((~~Underground~~)) Enclosed stations shall be provided with a fire command center in accordance with NFPA 72 and Section 509 of the 2012 *Seattle Fire Code*.

***

5.9.1.1 Interior wall and ceiling finish materials in enclosed stations shall ((~~comply with one of the following~~)) be either noncombustible or shall comply with Chapter 8 of the 2012 Seattle Fire Code.

~~(((1) Interior wall and ceiling finish materials shall be non-combustible materials.~~

~~(2) Interior wall and ceiling finish materials, other than textile wall coverings or foam plastic insulation shall exhibit a flame spread index not exceeding 25 and a smoke developed index not exceeding 450 when tested in accordance with ASTM E 84.~~))

((~~**5.9.1.2** Interior wall and ceiling finish Materials when tested in accordance with NFPA 286 shall comply with the following:~~

~~(1) Flames shall not spread to the ceiling during the 40 kW (135 kBtu/hr) exposure,~~

~~(2) During the 160 kW (545 kBtu/hr) exposure, the following criteria shall be met:~~

~~(a) Flame shall not spread to the outer extremities of the sample on the 2.45 mx 3.7 m (8 ft x 12 ft) wall.~~

~~(b) The peak heat release rate shall not exceed 800 kW (2730 kBtu/hr).~~

~~(c) Flashover shall not occur.~~

~~(3) The total smoke released throughout the test shall not exceed 1000 m2 (10,764 ft^2).~~))

***

5.9.2.1 Interior finish in open stations shall comply with the requirements of ((~~NFPA *101*, Chapter 12~~)) Chapter 8 of the 2012 *Seattle Fire Code*.

***

5.10 Rubbish Containers. Rubbish containers shall ((~~be manufactured of noncombustible materials.~~)) comply with Section 304 of the 2012 *Seattle Fire Code*.

***

CHAPTER 6

TRAINWAYS

***

6.2.1.2 System egress ((~~points~~)) walk surfaces shall be illuminated at a level of not less than 2.69 lx (0.25 ft-candles) or as *approved* by the authority having jurisdiction.

***

6.2.1.9* The means of egress within the trainway shall be provided with an unobstructed clear width graduating from the following:

(1)~~610 mm (24 in.)~~ 760 mm (30 in.) at the walking surface to

(2)~~760 mm (30 in.)~~ 910 mm (36 in.) at 1420 mm (56 in.) above the walking surface to

(3)~~610 mm (24 in.)~~ 760 mm (30 in.) at 2025 mm (80 in.) above the walking surface

***

6.2.2.1 General. Exit stairs and doors shall comply with Chapter ((~~7 of NFPA *101*~~)) 10 of the 2012 *Seattle Building Code*, except as herein modified.

***

~~((**6.2.2.2.2** For exit stairs serving underground or enclosed trainways, the width of exit stairs shall not be required to exceed 1120 mm (44 in.).~~))

***

~~((**6.2.2.5 Exit Hatches.**~~

~~**6.2.2.5.1** Exit hatches shall be permitted in the means of egress, provided the following conditions are met:~~

~~(1) Hatches shall be equipped with a manual opening device that can be readily opened from the egress side.~~

~~(2) Hatches shall be operable with not more than one releasing operation.~~

~~(3) The force required to open the hatch when applied at the opening device shall not exceed 130 N (30 lb).~~

~~(4) The hatch shall be equipped with a hold-open device that automatically latches the door in the open position to prevent accidental closure.~~

~~**6.2.2.5.2** Exit hatches shall be capable of being opened from the discharge side to permit access by authorized personnel.~~

~~**6.2.2.5.3*** Exit hatches shall be conspicuously marked on the discharge side to prevent possible blockage.~~))

***

6.2.5.2 Lighting systems for enclosed trainways described in 6.2.5.1 shall be installed in accordance with ((~~Sections 7.8 and 7.9 of NFPA 101~~)) Chapter 10 of the 2012 *Seattle Building Code*, except as otherwise noted in this standard.

***

6.3.3.2.11* Emergency Power Supply System (EPSS). Enclosed trainways shall be ((~~such that, in the event of failure of the normal supply to, or within, the system, emergency power shall be provided with emergency power~~)) provided with a Class 2 , Type 60, Level 1 Emergency Power Supply System (EPSS) in accordance with Article 700 of *NFPA 70*, and Chapter 4 of NFPA 110. The supply system for emergency purposes, in addition to the normal services to the trainway, shall be one or more of the types of systems described in subsections 700.12(A) through 700.12(E) of *NFPA 70*.

6.3.3.2.11.1 The following systems shall be connected to the emergency power supply system:

((~~(1)Emergency lighting~~

~~(2)Protective signaling systems~~

~~(3)Emergency communication system~~

~~(4)Fire command center)~~)

(1) Exit signs and means of egress illumination

(2) Elevator car lighting.

(3) Emergency voice/alarm communications systems.

(4) Automatic fire detection systems.

(5) Fire alarm systems.

(6) Power and lighting for the fire command center.

(7) Lighting for mechanical rooms containing critical equipment.

(8) Electrically powered fire pumps.

(9) Ventilation and automatic fire detection equipment for smoke proof enclosures.

(10) Smoke control systems.

(11) A selected elevator in each bank of elevators in accordance with *Seattle Building Code* Section 3016.7. A bank of elevators is a group of elevators or a single elevator controlled by a common operating system—all elevators that respond to a single call button constitute a bank of elevators. All elevators shall be transferable to emergency power.

***

6.5.2.1 An *approved* fire standpipe system shall be provided ((~~in underground~~)) in fixed guideway transit and passenger rail system trainways where physical factors prevent or impede access to the water supply or fire apparatus, ((~~where~~))if required by the *authority having jurisdiction*.

***

6.5.2.4.3 Hydraulic design information signs shall be provided at each fire department connection indicating the residual inlet pumping pressure(s) required for the hydraulically most remote and/or other selected hose connection outlet location(s).

***

6.5.2.6 Four-way 2 ½ inch fire department connections shall be provided at all emergency access points.

6.5.2.7 Standpipes shall be sized to provide 1000 gpm. Hydraulic calculations shall be based on 500 gpm at 130 psi at the hydraulically most remote hose connection, with a simultaneous flow of 500 gpm at the next hydraulically most remote hose connection. The maximum calculated pressure at any point in the system shall not exceed 350 psi.

6.5.2.8 Standpipes shall be interconnected at all tunnel cross passageways and within the stations, with isolation valves provided for each interconnection.

6.5.2.9 Hose connection outlets shall be provided at maximum 200 feet spacing.

***

6.6.7.6 Tanks shall be abandoned in accordance with the provisions of ((~~Annex C of NFPA 30.~~)) Chapter 57 of the 2012 *Seattle Fire Code*.

CHAPTER 7

EMERGENCY VENTILATION SYSTEM

***

7.2.4 ((~~Criteria for the system reliability analysis in 7.2.3(6) shall be established and approved.~~)) The design analysis shall address the performance of the system with one fan out-of-service.

((~~**7.2.4.1** The analysis shall consider as a minimum the following events:~~

~~(1) Fire in trainway or station~~

~~(2)Local incident within the electrical utility that interrupts power to the emergency ventilation system~~

~~(3)Derailment~~))

***

7.7.1 (~~The design of the power for the emergency ventilation system shall comply with the requirements of Article 700 of *NFPA 70*.~~)) The emergency ventilation system shall be provided with a Class 2 , Type 60, Level 1 Emergency Power Supply System (EPSS) in accordance with Article 700 of *NFPA 70*, and Chapter 4 of NFPA 110.

((~~**7.7.1.1** Alternatively, the design of the power for the emergency ventilation system shall be permitted to be based upon the results of the electrical reliability analysis as per 7.2.3(6), as approved.~~))

***

CHAPTER 8

VEHICLES

8.8.2.1 A means to allow passengers to safely board the vehicle (rescue train) from a walk surface or other suitable area under the supervision of authorized employees in case of an emergency shall be provided.

***

CHAPTER 10

COMMUNICATIONS

***

10.3.2 ((~~Wherever necessary for reliable communications, a separate radio network capable of two-way radio communication for fire department personnel to the fire department communication center shall be provided.~~)) If required by the AHJ underground and enclosed stations and trainways shall be provided with emergency responder radio coverage conforming to Section 510 of the 2012 *Seattle Fire Code.*

***

10.6.1.1 If required by the authority having jurisdiction, stations shall be provided with an approved Emergency Communication System in accordance with the 2010 edition of NFPA 72.

***

ANNEX A

EXPLANATORY MATERIAL

***

A.5.4.11 Emergency Power. The class defines the minimum time, in hours, that the Emergency Power Supply System (EPSS) is designed to operate at its rated load without being refueled or recharged. The type defines the maximum time, in seconds, that the EPSS will permit the load terminals of the transfer switch to be without acceptable electrical power. NFPA 110 recognizes two levels of EPSS equipment installation, performance and maintenance. Level 1 systems shall be installed where failure of the EPSS to perform could result in loss of human life or serious injuries.

***

A.6.3.3.2.11 The class defines the minimum time, in hours, that the Emergency Power Supply System (EPSS) is designed to operate at its rated load without being refueled or recharged. The type defines the maximum time, in seconds, that the EPSS will permit the load terminals of the transfer switch to be without acceptable electrical power. NFPA 110 recognizes two levels of EPSS equipment installation, performance and maintenance. Level 1 systems shall be installed where failure of the EPSS to perform could result in loss of human life or serious injuries.

***

A.7.7.1 The class defines the minimum time, in hours, for the Emergency Power Supply System (EPSS) is designed to operate at its rated load without being refueled or recharged. The type defines the maximum time, in seconds, that the EPSS will permit the load terminals of the transfer switch to be without acceptable electrical power. NFPA 110 recognizes two levels of EPSS equipment installation, performance and maintenance. Level 1 systems shall be installed where failure of the EPSS to perform could result in loss of human life or serious injuries.

***

Section 41. The National Fire Protection Association (NFPA) Standard 502, Standard for Road Tunnels, Bridges, and other Limited Access Highways, 2011 edition, is amended as follows:

***

Chapter 3 Definitions

***

3.2.2* Authority Having Jurisdiction (AHJ). ~~An organization, office, or individual responsible for enforcing the requirements of a code or standard, or for approving equipment,~~

~~materials, an installation, or a procedure.~~ The fire chief or other designated authority charged with the administration of the fire code, or a duly authorized representative.

***

Chapter 4

General Requirements

***

4.2 Safeguards During Construction. During the course of construction or alteration of any facility addressed in this standard, the provisions of ((~~NFPA 241~~)) Chapter 33 of the 2012 *Seattle Fire Code* and Chapter 33 of the 2012 *Seattle Building Code* shall apply, except as modified herein.

***

4.3.2* Limited Access Highways. Fire protection for limited access highways shall comply with the requirements of Chapter 5 and Chapter 10.

4.3.3 Bridges and Elevated Highways. Fire protection for bridges and elevated highways shall comply with the requirements of Chapter 6 and Chapter 10.

4.3.4* Depressed Highways. ((~~Standpipe systems or fire extinguishers, or both, shall be installed on depressed highways where physical factors prevent or impede access to the water supply or fire apparatus.~~)) Fire protection for depressed highways shall comply with the requirements of Chapter 5 and Chapter 10.

4.3.5* Road Tunnels. Fire protection for road tunnels shall comply with the requirements of Chapter 7 and Chapter 10.

4.3.6* Roadway Beneath Air-Right Structures. Fire protection for roadways that are located beneath air-right structures shall comply with the requirements of Chapter 8 and Chapter 10.

***

4.5 Emergency Communications. Emergency communications, ((~~where~~)) if required by the authority having jurisdiction, shall be provided by the installation of outdoor-type emergency telephone boxes, ((~~coded alarm telegraph stations,~~)) radio transmitters, or other approved devices that meet the following requirements:

(1) They shall be made conspicuous by means of indicating lights or other approved markers.

(2) They shall be identified by a readily visible number plate or other approved device.

(3) They shall be posted with instructions for use by motorists.

(4) Where practicable, ((~~T~~)) they shall be located in approved locations so that motorists can park vehicles clear of the travel lanes.

(5) Emergency communication devices shall be protected from physical damage from vehicle impact.

(6) Emergency communication devices shall be connected to an approved constantly attended location.

***

Chapter 5

Limited Access and Depressed Highways

***

5.1 General. This chapter ((~~shall~~)) provides fire protection requirements for limited access and depressed highways.

***

((~~**5.3* Fire Hydrants. (Reserved)**~~))

***

Chapter 6

Bridges and Elevated Highways

***

6.6 ((~~**Standpipe,**~~)) **Fire Hydrants and Water Supply.**

6.6.1* Applicability. Where the ((~~length of a bridge or elevated highway exceeds 300 m (1000 ft), a horizontal standpipe system shall be installed on the structure~~)) distance from any point on the bridge or elevated highway exceeds 120 m (400 ft) to a fire hydrant, the bridge or elevated highway shall be provided with a hydrant system in accordance with the requirements of Chapter ((~~9~~)) 10.

***

6.10 Control of Hazardous Materials. Where required by the authority having jurisdiction, control of hazardous materials shall be in accordance with the requirements of Chapter 14.

***

Chapter 7

Road Tunnels

***

7.4 Fire Alarm and Detection.

7.4.1 ((~~Tunnels described in categories B, C, and D shall have at least one manual means of identifying and locating a fire in accordance with the requirements of 7.4.1.3. Tunnels described in categories B, C, and D without 24-hour supervision shall have an automatic fire detection system in accordance with 7.4.1.4.~~)) At least one automatic fire detection system to identify and locate a fire in a tunnel shall be provided.

All fire alarm, detection, supervisory, and trouble signals shall be distinctly different and shall be automatically transmitted to a central station service that is listed in the current edition of the Underwriters Laboratories FIRE PROTECTION EQUIPMENT DIRECTORY under the category Central Station (UUFX) as a Full Service Company or as a Fire Alarm Service–Local Company which subcontracts the monitoring, retransmission and associated record keeping and reporting to a listed Full Service Company or Monitoring Company. The listing shall indicate that the Full Service Company or Fire Alarm Service – Local Company provides service to the Seattle area.

Exception: The operations control center may serve as a proprietary supervising station in accordance with NFPA 72 where approved by the authority having jurisdiction.

7.4.1.1* Closed-circuit television (CCTV) systems ~~with traffic-flow indication devices or surveillance cameras shall be permitted for use to identify and locate fires in tunnels with 24-hour supervision~~ shall be provided, and shall be capable of identifying the location of the fire within 15 m (50 ft).

7.4.1.2 ((~~Ancillary spaces within tunnels defined in categories B, C, and D (such as pump~~

~~stations and utility rooms) and other areas shall be supervised by automatic fire alarm systems in accordance with 7.4.1.4.~~)) CCTVs with or without traffic-flow indication devices may automatically identify fires in tunnels if all of the components of the video image fire detection system, including hardware and software, are listed for the purpose of fire detection.

7.4.1.3 ((~~**Manual Fire Alarm Boxes**~~)) **Emergency Telephones.**

7.4.1.3.1((~~Manual fire alarm boxes mounted in NEMA Enclosure Type 4 (IP 65) or equivalent boxes shall be installed at intervals of not more than 90 m (300 ft) and at all cross-passages, and means of egress from the tunnel.~~)) Emergency telephones shall be installed at intervals of not more than 90 m (300 ft) and at all cross- passages, standpipe hose connection locations, and means of egress from the tunnel.

7.4.1.3.2 ((~~The manual fire alarm boxes shall be accessible to the public and the tunnel personnel.~~)) The location of the emergency telephones during off-hook condition shall be indicated at the monitoring station.

~~**7.4.1.3.3** The location of the manual fire alarm boxes shall be approved.~~

~~**7.4.1.3.4** The alarm shall indicate the location of the manual fire alarm boxes at the monitoring station.~~

~~**7.4.1.3.5** The system shall be installed, inspected, and maintained in compliance with *NFPA 72*.~~))

***

7.4.1.4.1* Automatic fire detection systems and fixed water-based fire-fighting system water flow alarm-initiating devices shall be installed in accordance with NFPA 72 and approved by the AHJ.

***

7.4.1.4.5 Spot detectors shall have a light that remains on until the device is reset, or shall be provided with remote alarm or supervisory indication in a location acceptable to the authority having jurisdiction.

***

7.4.2 Fire Alarm Control Panel. An approved fire alarm control panel (FACP) shall be installed, inspected, and maintained in accordance with NFPA 72.

7.4.2.1 Automatic fire detectors and fixed water-based fire-fighting system water flow alarm-initiating devices protecting the roadway and ancillary spaces within tunnels (pump stations, utility rooms, cross-passages, ventilation structures) and other areas shall be supervised by automatic fire alarm systems.

7.4.2.2 Automatic fire detection systems for zoned deluge fixed water-based fire-fighting systems within a tunnel shall be zoned to correspond with the fixed water-based fire-fighting system zones.

7.4.2.3 Automatic fire detection systems within a tunnel shall be zoned to correspond with the tunnel ventilation zones if tunnel ventilation is provided.

7.4.3 Fire Command Center. If required by the authority having jurisdiction, road tunnels shall be provided with a fire command center in accordance with Section 508 of the 2012 *Seattle Fire Code*.

7.5 * Emergency ((~~Communications Systems~~)) Responder Radio Coverage. Road tunnels shall be provided with Emergency Responder Radio Coverage in accordance with this section.

7.5.1 In new and existing tunnels and ancillary structures, ((~~wherever necessary for dependable and reliable communications, a separate radio network capable of two-way radio communication for fire department personnel to the fire department communication center~~)) if required by the authority having jurisdiction, emergency responder radio coverage in accordance with Section 510 of the 2012 Seattle Fire Code shall be provided.

***

7.10 Water-Based Fire-Fighting Systems. See Chapter ((~~10~~)) 9.

***

7.15.3 Maintenance. The means of egress shall be maintained in accordance with ((~~NFPA 1~~)) Chapter 10 of the 2012 *Seattle Fire Code*.

***

7.15.6.4 The emergency exits shall be separated from the tunnel by a minimum of a 2-hour fire-rated construction enclosure having a Class A interior finish as defined in ((~~NFPA 101~~)) the 2012 *Seattle Building Code*.

***

Chapter 9

Water-Based Fire-Fighting Systems

9.1 General

9.1.1 Water-based fire-fighting systems ((~~shall be permitted~~)) are required in road tunnels as part of an integrated approach to the management of fire and life safety.

9.1.2 ((~~When water-based fire-fighting systems are installed in road tunnels, t~~)) The fixed

water-based fire-fighting system shall be installed, inspected, and maintained in accordance with ((~~NFPA 11,~~)) NFPA 13. ((~~, NFPA 15, NFPA 16, NFPA 18, NFPA 25, and NFPA 750 or other equivalent international standards.~~))

9.1.2.1 Minimum protection of the roadway shall be in accordance with NFPA 13 for Extra Hazard Group 2. If flammable liquids and/or hazardous materials will be present, protection shall be based on an engineering analysis and approved by the authority having jurisdiction.

9.1.2.2 Protection of electrical rooms and mechanical spaces shall be in accordance with NFPA 13 for Ordinary Hazard Group 1.

9.1.2.3 Protection of exit enclosures shall be in accordance with NFPA 13 for Light Hazard.

((~~**9.2 Design Objectives.**~~

~~**9.2.1** The goal of a water-based fire-fighting system shall be to slow, stop, or reverse the rate of fire growth or otherwise mitigate the impact of fire to improve tenability for tunnel occupants during a fire condition, enhance the ability of first responders to aid in evacuation and engage in manual fire-fighting activities, and/or protect the major structural elements of a tunnel.~~

~~**9.2.2*** Water-based fire-fighting systems shall be categorized based upon their desired performance objective in 9.2.2.1 through 9.2.2.4.~~

~~**9.2.2.1* Fire Suppression System.** Fire suppression is the reduction in the heat release rate of a fire by a sufficient application of water. Fire size shall remain reduced over the design~~

~~discharge duration.~~

~~**9.2.2.2* Fire Control System.** Fire control systems shall be designed to stop or significantly slow the growth of a fire within a reasonable period from system activation such that the total heat release rate does not substantially increase over discharge duration.~~

~~**9.2.2.3* Volume Cooling System.** Volume cooling systems shall be designed to provide substantial cooling of products of combustion but are not intended to directly affect heat release rate.~~

~~**9.2.2.4* Surface Cooling System.** Surface cooling systems shall be designed to provide direct cooling of critical structure, equipment, or appurtenances without directly affecting heat release rate.~~

~~**9.3 Performance Evaluation.**~~

~~**9.3.1*** Fire test protocols shall be designed to address the performance objectives as described in 9.2.2 and the tunnel parameters described in Section 9.4.~~

~~**9.3.2** Fire test protocols shall be designed to replicate and evaluate the range of the application parameters associated with transportation tunnels.~~

~~**9.3.3*** System components shall be listed.~~

~~**9.4 Tunnel Parameters.**~~

~~**9.4.1** Tunnel parameters shall be the features of the tunnel that affect the design of a water-based fire-fighting system.~~

~~**9.4.2 Tunnel Geometry.** The tunnel geometry (width, ceiling height, obstruction location) shall be considered when selecting such parameters as nozzle location and nozzle positioning.~~

~~**9.4.3 Ventilation.** Ventilation considerations shall include natural and fire-induced forced ventilation parameters.~~

~~**9.4.4 Hazard Analysis.** A fire hazard analysis shall be conducted to determine both the design parameters of the water-based fire-fighting system and the type of detection and activation scheme employed. The water-based fire-fighting system shall address the anticipated vehicle types and contents, ease of ignition and re-ignition of the fuel, anticipated fire growth rate, and difficulty of achieving one or more of the performance objectives established in Section 9.2 or as otherwise acceptable to the AHJ.~~

~~**9.4.5 Obstructions and Shielding.** The presence of obstructions and the potential for shielding of water-based fire-fighting system discharge shall be addressed to ensure that system performance is not affected.~~

~~**9.4.6 Ambient Conditions.** The range of ambient conditions that could be experienced in the tunnel shall be identified.~~

~~**9.5 System Design and Installation Documentation.**~~

~~**9.5.1** The system design and installation documentation shall identify the design objectives and tunnel parameters over which the system performance evaluation is valid.~~

~~**9.5.2*** System documentation shall clearly identify engineering safety factors incorporated into the overall system design. Safety factors shall be required to ensure that installed system performance exceeds the performance of the system as tested in accordance with Section 9.3.~~

~~**9.5.3** System documentation shall also include recommended testing, inspection, and maintenance procedures and, by reference, the requirements of the relevant NFPA standard or~~

~~equivalent standard acceptable to the AHJ.~~

~~**9.6 Engineering Design Requirements.**~~

~~**9.6.1*** When a water-based fire-fighting system is included as part of the overall design of a transportation tunnel, the impact of this system on other measures being part of the overall safety concept shall be evaluated. At a minimum, this evaluation shall address the following:~~

~~(1) Impact on drainage requirements~~

~~(2) Impact on tenability, including:~~

~~(a) Increase in humidity~~

~~(b) Reduction (if any) in stratification~~

~~(3) Integration with other tunnel systems, including:~~

~~(a) Fire detection and alarm system~~

~~(b) Tunnel ventilation system~~

~~(c) Traffic control and monitoring systems~~

~~(4) Incident command structure and procedures, including:~~

~~(a) Procedures for tunnel operators~~

~~(b) Procedures for first responders~~

~~(c) Tactical fire-fighting procedures~~

~~(5) Protection and dependability of water-based fire-fighting system, including:~~

~~(a) Impact events~~

~~(b) Seismic events~~

~~(c) Redundancy requirements~~

~~(6) Ongoing system maintenance and service requirements~~))

***

Chapter 10

Standpipe, Fire Hydrants, and Water Supply

***

10.1.4.3 ((~~Heat trace material shall be listed for the intended purpose and supervised for power loss.~~)) Heat tracing systems for freeze protection for standpipes shall be in accordance with Seattle Fire Department Administrative Rule 9.03.09, *Automatic Sprinkler and Standpipe Systems* and any future revisions of this rule adopted by the authority having jurisdiction.

***

10.2 Standpipe Water Supply

***

10.2.3 ((~~Acceptable water supplies shall include the following:~~

~~(1) Municipal or privately owned waterworks systems that have adequate pressure and flow rate and a level of integrity acceptable to the authority having jurisdiction~~

~~(2) Automatic or manually controlled fire pumps that are connected to an approved water source~~

~~(3) Pressure-type or gravity-type storage tanks that are installed, inspected, and maintained in accordance with NFPA 22~~))

Standpipes shall be sized to provide 1000 gpm. Hydraulic calculations shall be based on 500 gpm at 130 psi at the hydraulically most remote hose connection, with a simultaneous flow of

500 gpm at the next hydraulically most remote hose connection. The maximum calculated pressure at any point in the system shall not exceed 350 psi.

***

10.3.1 Fire department connections shall be of the threaded ((~~two-way or three-way~~)) 65-mm (2½-in) four-way type ((~~ or shall consist of one 100 mm (4 in.) quick-connect coupling that is accessible~~)).

***

10.4 Standpipe Hose Connections

***

10.4.2 ((~~Hose connection spacing shall not exceed more 85 m (275 ft).~~)) Dual 65-mm (2½-in) hose connection outlets having separate valves shall be provided at each hose connection location.

***

10.7 Fire Hydrants and Water Supply.

10.7.1 Fire hydrants for limited access and depressed highways shall be provided at spacing not to exceed 1,000 feet to provide for transportation hazards.

10.7.2 Fire hydrants for roadways beneath air-right structures, bridges, and elevated highways shall be provided so that no location on the protected roadway is more than 90 m (300 ft) from a fire hydrant.

10.7.3 Fire hydrants for road tunnels shall be provided so that no location on the protected roadway is more than 45 m (150 ft) from a fire hydrant.

10.7.4 The water supply for fire hydrants shall provide a minimum of 1,000 gpm (63 L/s) at 20 psi (138 kPa) flowing independently, and a minimum of 1,500 gpm (34 L/s) at 20 psi (138 kPa) with two fire hydrants flowing simultaneously.

10.8 Bridges and Elevated Highways.

10.8.1 Fire hydrants for bridges and elevated highways shall be provided in accordance with this section and Section 10.7.

10.8.2 If median dividers and/or four or more traffic lanes are present, fire hydrants for bridges and elevated highways shall be provided on both sides of the roadway at the required spacing or installed in the median divider at the required spacing.

10.8.3 Fire hydrants for bridges and elevated highways shall have two 100 mm (4 in) hose connection outlets, with external threads in accordance with City of Seattle Standard Plan No. 310a, and each outlet provided with a hand-operable valve readily accessible from the roadway.

10.8.4 The hose connection outlets shall be oriented parallel to the roadway and face in both directions of travel.

Exception: The outlets may be angled in towards the roadway at an angle not exceeding 22.5 degrees.

10.8.5 Hose connection outlets shall be positioned such that the centerline of each outlet is installed not more than 400 mm (16 in) horizontally from the inside edge of the top and not less than 200 mm (8 in) above the top of the guardrail or edge barrier, and not more than 1370 mm (54 in) above the roadway.

10.8.6 Hose connection outlets shall be provided with caps that are removable with a standard hydrant wrench.

10.8.7 Hose connection outlet caps shall be provided with a 3 mm (1/8 in) hole and be secured with a short length of chain or cable to prevent falling after removal.

10.8.8 Water shall be supplied to bridge and elevated highway hydrants by the use of approved manually actuated preaction or deluge valves installed in locations not subject to freezing, such as in underground vaults or other *approved* locations.

10.8.9 Access to the preaction or deluge valves and manual actuation capability at the valve locations shall be provided, including access key box if the water supply vault will be locked.

10.8.10 A preaction or deluge valve actuation device (such as an electrical switch, push button, manual pull station, etc,) shall be installed at each hydrant location and be protected from damage in a weatherproof enclosure that can be opened without the use of tools or special knowledge, or with a standard hydrant wrench, or other approved method.

10.8.11 The location of the preaction or deluge valve actuation switch installed at each hydrant shall be readily visible and have approved signage.

10.8.12 A means to indicate that the system is in the tripped condition such as a light beacon or remote monitoring of the system shall be provided.

10.8.13 Hydrant systems for bridges and elevated highways shall have provisions for complete draining after use.

10.8.14 Combination air relief/vacuum valves shall be installed at each high point on the system.

10.8.15 Water supply vault location information, vault access instructions, and a phone number for road crew to drain the system shall be provided at the roadway control panel push button location.

10.8.16 If used, heat tracing systems for freeze protection for hydrant systems shall be in accordance with Seattle Fire Department Administrative Rule 9.03.09, *Automatic Sprinkler and Standpipe Systems* and any future revisions of this rule adopted by the authority having jurisdiction.

10.9 Maintenance and Confidence Testing

10.9.1 Standpipe and hydrant systems shall be inspected and tested at least annually.

10.9.2 Maintenance and periodic testing are the owner's responsibility, or the responsibility of such other person as may be designated by the owner, and are separate from fire department inspections.

10.9.3 The person, firm or corporation performing such work shall have a Type STP-1 certificate from the fire department. See Administrative Rules 9.01.09, *Certification for Installing, Maintaining and Testing Life Safety Systems and Equipment* and Administrative Rule 9.02.09, *Confidence Test Requirements for Life Safety Systems*.

10.10 Standpipe Installations in Tunnels Under Construction.

10.10.1 A standpipe system shall be installed in tunnels under construction in accordance with 10.10.1.1 and 10.10.1.2.

10.10.1.1 A standpipe system shall be installed before the tunnel under construction has exceeded a length of 61 m (200 ft) beyond any access shaft or portal and shall be extended as work progresses to within 61 m (200 ft) of the most remote portion of the tunnel.

10.10.1.2 Standpipes shall be sized for approved water flow and pressure at the outlet, based upon the maximum predicted fire load.

***

Chapter 11

Emergency Ventilation

***

11.1.1.1 If an engineering analysis is not conducted, or does not support the use of natural ventilation for the configurations described in 11.1.1, a mechanical emergency ventilation system shall be provided.

11.1.1.2 The engineering analysis of the ventilation system shall include a validated subway analytical simulation program augmented as appropriate by a quantitative analysis of airflow dynamics produced in the fire scenario, such as would result from the application of validated computational fluid dynamics (CFD) techniques.

11.1.1.3 The results of the analysis shall include the no-fire (or cold) air velocities that can be measured during commissioning to confirm that a mechanical ventilation system as built meets the requirements determined by the analysis.

***

Chapter 12

Electrical Systems

***

12.4* Emergency Power. Road tunnels ((~~complying with Category B-D in Section 7.2~~)) shall be provided with ((~~emergency power~~)) a Class 2, Type 60, Level 1 Emergency Power Supply System (EPSS) in accordance with Article 700 of NFPA 70 and Chapter 4 of NFPA 110. ((~~For emergency and standby power systems, other than a separate service, see NFPA 110.~~))

12.4.1 The following systems shall be connected to the emergency power supply system:

(1) Emergency ((~~lighting~~)) voice/alarm communication systems

(2) Traffic control system(s)

(3) Exit signs and means of egress illumination

(4) ((~~Communication~~)) Lighting for mechanical rooms.

(5) Tunnel drainage system(s)

(6) Ventilation and automatic fire detection equipment for smoke proof enclosures.

(7) Automatic Fire detection systems

(8) Security system(s)

(9) Closed-circuit television or video system(s)

(10) Smoke control systems.

(11) Electrically powered fire pumps.

(12) Power and lighting for the fire command center.

(13) Fire alarm systems.

***

Chapter 13

Emergency Response

***

13.5.1.1* The OCC ((~~shall~~)) may serve as a proprietary supervising station to allow direct receipt of alarms where approved by the authority having jurisdiction. This provides more rapid alarm information, and allows integrated alarm and device/system activation without delays.

***

13.8.6 Limited Access Highways and Road Tunnels.

***

Chapter 14

Regulated and Unregulated Cargoes

14.1.1* **((**~~The authority having jurisdiction shall adopt rules and regulations that apply to the transportation of regulated and unregulated cargoes.~~)) This chapter applies to the transportation of hazardous materials through road tunnels as follows:

(1) If the tunnel length equals or exceeds 240 m (800 ft) and if the maximum distance from any point within the tunnel to an area of safety exceeds 120 m (400 ft).

(2) If tunnel length equals or exceeds 300 m (1000 ft).

Exceptions:

(1) The existing Mount Baker Tunnel (Interstate-90) and the Washington State Convention and Trade Center lid (Interstate-5) if the foam-water fire protection system(s) are fully functional and in-service.

(2) Fuel contained in the fuel system of the transporting vehicle, or in the fuel systems of vehicles and equipment being towed or carried.

14.1.2 *((~~Design and planning of the facility shall address the potential risk presented by regulated and unregulated cargoes as permitted by 13.1.1.~~)) Vehicles transporting hazardous materials in quantities that require DOT placards in accordance with 49 CFR are prohibited in road tunnels.

***

14.1.4 Flames used for heating vehicles or loads shall be extinguished before the vehicle enters the road tunnel or its approaches.

14.1.5 Tank vehicles that are empty, or that have a residue, or vehicles transporting empty containers are prohibited from entering road tunnels if they previously transported the following hazardous materials:

(1) Class 1 explosives, division 1.1, 1.2, and 1.3;

(2) Class 2, division 2.3 poisonous gas;

(3) Class 4, division 4.3 dangerous when wet materials;

(4) Class 6, division 6.1 poisonous materials marked PG I (Inhalation Hazard), or PG III (Stow Away From Foodstuffs)

Exceptions:

1. Tank vehicles or containers that have been sufficiently cleaned of residue and purged of vapor to remove any potential hazard;

2. Tank vehicles or containers that have been reloaded with a material not classified as a hazardous material;

14.1.6 Alternative-fuel vehicles powered by liquefied petroleum gas (LPG), liquefied natural gas (LNG) or compressed natural gas (CNG) are permitted if the:

(1) Vehicle has a dedicated alternative-fuel system installed by the manufacturer of the vehicle.

(2) Vehicle has a fuel system that has been properly converted to an alternative fuel system.

(3) Vehicle alternative-fuel system conforms to applicable industry standards, including:

(a) NFPA 52 - Standard for Compressed Natural Gas (CNG) Vehicular Fuel Systems, which is incorporated by reference; or

(b) NFPA 58 - Standard for the Storage and Handling of Liquefied Petroleum Gases (LPG), which is incorporated by reference.

(4) Vehicle alternative-fuel system conforms to applicable federal regulations.

(5) Fuel capacity of the vehicle does not exceed 300 pounds water capacity.

14.1.6.1 Alternative-fuel vehicles shall display all markings and symbols required by law to identify the alternative-fuel system.

***

Annex A

Explanatory Material

***

A.10.5.1

Table A.10.5.1 Fire Data for Typical Vehicles

Vehicles	**Peak Fire Heat–Release Rates (MW)**
Passenger car	((~~5–~~))10
Multiple passenger cars (2–4 vehicles)	((~~10–~~))20
Bus	((~~20–~~))30
Heavy goods truck	((~~70–~~))200
Tanker*	((~~200–~~))300

***

A.12.4 It is expected that the operations of all systems within the vicinity of a fire can fail. Section 11.4 is intended to limit the area of such failure. The class defines the minimum time, in hours, that the Emergency Power Supply System (EPSS) is designed to operate at its rated load without being refueled or recharged. The type defines the maximum time, in seconds, that the EPSS will permit the load terminals of the transfer switch to be without acceptable electrical power. NFPA 110 recognizes two levels of EPSS equipment installation, performance and maintenance. Level 1 systems shall be installed if failure of the EPSS to perform could result in loss of human life or serious injuries.

***

A.14.1 Hazardous Material. A substance or material, including a hazardous substance, that has been determined by the Secretary of Transportation for the United States Department of Transportation (U.S.D.O.T.) to be capable of posing an unreasonable risk to health, safety and property when transported in commerce and which has been so designated.

***

TABLE A.14.1.2

The following classes of hazardous materials are defined in the United States Department of Transportation Regulations, 49 CFR 173, which is incorporated by reference:

Name of Class or Division	Class Number	Division Number (if any)	49 CFR Reference for Definitions
Explosives (with a mass explosion hazard)	1	1.1	173.50
Explosives (with a projection hazard)	1	1.2	173.50
Explosives (with predominantly a fire hazard)	1	1.3	173.50
Explosives (with no significant blast hazard)	1	1.4	173.50
Very insensitive explosives; blasting agents	1	1.5	173.50
Extremely insensitive detonating substances	1	1.6	173.50
Flammable gas	2	2.1	173.115
Nonflammable compressed gas	2	2.2	173.115
Poisonous gas	2	2.3	173.115
Flammable and combustible liquid	3	---	173.120
Flammable solid	4	4.1	173.124
Spontaneously combustible materials	4	4.2	173.124
Dangerous when wet material	4	4.3	173.124
Oxidizers	5	5.1	173.127
Organic peroxides	5	5.2	173.128
Poisonous materials	6	6.1	173.132
Infectious substances (Etiological agents)	6	6.2	173.134
Radioactive materials	7	---	173.403
Corrosive materials	8	---	173.136
Miscellaneous hazardous materials	9	---	173.140
Other regulated materials: ORM-D	None	---	173.144

***

Section 42. Sections 2 through 44 of Ordinance 123393 are hereby repealed.

Section 43. Severability. The provisions of this ordinance are declared to be separate and severable. The invalidity of any clause, sentence, paragraph, subdivision, section or portion of this ordinance, or the invalidity of its application to any person or circumstance, shall not affect the validity of the remainder of this ordinance, or the validity of its application to other persons or circumstances.

Section 44. During the transition period, an applicant who submits a valid and fully complete building permit application may elect to have the application considered under the provisions of Ordinance 123393 rather than this Ordinance. The transition period begins on the effective date of this Ordinance and extends through the later of: (a) October 11, 2013; or (b) the 60th day following the effective date of this Ordinance (unless the 60th day is a Saturday, Sunday, or federal or City holiday, in which case the 60th day shall be deemed to be the next day that is not a Saturday, Sunday, or federal or City holiday).

Section 45. This ordinance shall take effect and be in force 30 days from and after its approval by the Mayor, but if not approved and returned by the Mayor within ten days after presentation, it shall take effect as provided by Seattle Municipal Code Section 1.04.020.

Passed by the City Council the ____ day of _____, 2013, and signed by me in open session in authentication of its passage this

_____ day of _____, 2013.

_____
President _____of the City Council

Approved by me this ____ day of _____, 2013.

_____
Michael McGinn, Mayor

Filed by me this ____ day of _____, 2013.

_____
Monica Martinez Simmons, City Clerk

(Seal)