SEATTLE CITY COUNCIL

Legislative Summary

CB 118772

Record No.: CB 118772 **Type:** Ordinance (Ord) **Status:** Passed

Version: 1 **Ord. no:** Ord 125138 **In Control:** City Clerk

File Created: 07/14/2016

Final Action: 09/29/2016

Title: AN ORDINANCE relating to the Seattle Fire Code, adopting as the Seattle Fire Code the 2015 edition of the International Fire Code with some exceptions, amending and adding various provisions to that code; amending Section 22.600.020 of the Seattle Municipal Code; and repealing Sections 2 through 44 of Ordinance 124288.

Date

Notes:

Filed with City Clerk:

Mayor's Signature:

Sponsors: González

Vetoed by Mayor:

Veto Overridden:

Veto Sustained:

Attachments: Full Text: CB 118772 vD2, Full Text: CB 118772 vD1a

Drafter: harold.scoggins@seattle.gov

Filing Requirements/Dept Action:

History of Legislative File

Legal Notice Published: ☐ Yes ☐ No

Version:	Acting Body:	Date:	Action:	Sent To:	Due Date:	Return Date:	Result:
1	Mayor	08/02/2016	Mayor's leg transmitted to Council	City Clerk			
	Action Text: The Council Bill (CB) was Mayor's leg transmitted to Council. to the City Clerk **Notes:**						
1	City Clerk	08/02/2016	sent for review	Council President's Office			
	Action Text: The Council Bill (CB) was sent for review. to the Council President's Office **Notes:**						
1	Council President's Office	08/05/2016	sent for review	Gender Equity, Safe Communities, and New Americans Committee			
	Action Text: The Council Bill (CB) was sent for review. to the Gender Equity, Safe Communities, and New Americans Committee						

Notes:

1	Full Council	09/06/2016	referred	Gender Equity, Safe Communities, and New Americans Committee	

Action Text: The Council Bill (CB) was referred. to the Gender Equity, Safe Communities, and New Americans Committee

Notes:

1	Gender Equity, Safe Communities, and New Americans Committee	09/14/2016	pass		Pass

Action Text: The Committee recommends that Full Council pass the Council Bill (CB).

In Favor: 3 Chair González , Vice Chair Burgess, Member Bagshaw

Opposed: 0

1		09/19/2016			
1	Full Council	09/26/2016	passed as amended		Pass

Action Text: The Motion carried, the Council Bill (CB) was passed as amended by the following vote, and the President signed the Bill:

Notes: ACTION 1:

Motion was made by Councilmember González, duly seconded and carried, to amend Council Bill 118772, Sections 1 and 2.1, by filling in two blanks with Clerk File number 319993, and Section 2.2, by filling in one blank with Council Bill number 118772.

ACTION 2:

Motion was made and duly seconded to pass Council Bill 118772 as amended.

In Favor: 9 Councilmember Bagshaw, Councilmember Burgess, Councilmember González , Council President Harrell, Councilmember Herbold, Councilmember Johnson, Councilmember Juarez, Councilmember O'Brien, Councilmember Sawant

Opposed: 0

1	City Clerk	09/28/2016	submitted for Mayor's signature	Mayor	
1	Mayor	09/29/2016	Signed		

Action Text: The Council Bill (CB) was Signed.

Notes:

1	Mayor	09/29/2016	returned	City Clerk	

Action Text: The Council Bill (CB) was returned. to the City Clerk

Notes:

1	City Clerk	09/29/2016	attested by City Clerk		

Action Text: The Ordinance (Ord) was attested by City Clerk.

Notes:

CITY OF SEATTLE

ORDINANCE 125138

COUNCIL BILL 118772

AN ORDINANCE relating to the Seattle Fire Code, adopting as the Seattle Fire Code the 2015 edition of the International Fire Code with some exceptions, amending and adding various provisions to that code; amending Section 22.600.020 of the Seattle Municipal Code; and repealing Sections 2 through 44 of Ordinance 124288.

BE IT ORDAINED BY THE CITY OF SEATTLE AS FOLLOWS:

Section 1. The 2015 International Fire Code, along with Appendices A, B, D, E, F, G, H, and I as published by the International Code Council, Inc., one copy of which is filed with the City Clerk in Clerk File 319993, is hereby adopted by reference.

Section 2. Section 22.600.020 of the Seattle Municipal Code, last amended by Ordinance 124288, is amended as follows:

22.600.020 The Seattle Fire Code ((.))

The Seattle Fire Code consists of:

1. the ((~~2012~~)) 2015 International Fire Code, along with Appendices A, B, D, E, F, G, H, and I, all as published by the International Code Council, Inc., one copy of which is filed with the City Clerk in Clerk File ((~~313133~~)) 319993;

2. the amendments to the ((~~2012~~)) 2015 International Fire Code and to Appendices A, B, D, E, F, G, H, and I, adopted by Council by ordinance, introduced as Council Bill ((~~117844~~)) 118772 ((~~; and~~)) .

((~~3. the standards referenced in Chapter 80 of the 2012 International Fire Code, including those standards added and NFPA Standards 130, and 502 that are further amended by Council by ordinance, introduced as Council Bill 117844. One copy of each amended standard is on file with the City Clerk in Clerk Files 310925 and 313144.~~

~~Wherever in this ordinance there is a conflict between metric units of measurement and English units, the English units govern.~~))

Section 3. Chapter 1 of the 2015 International Fire Code is amended as follows:

CHAPTER 1

SCOPE AND ADMINISTRATION

Part 1—GENERAL PROVISIONS

SECTION 101

SCOPE AND GENERAL REQUIREMENTS

[A] 101.1 Title. These regulations shall be known as the *Seattle Fire Code* ((~~of [NAME OF JURISDICTION]~~)), hereinafter referred to as "this code."

Throughout this code, where references are made to the *International Building Code*, *International Residential Code*, *International Mechanical Code*, *International Fuel Gas Code*, and the *International Existing Building Code*, those references mean those codes with Seattle amendments. Where NFPA 70 is referenced, it means the *Seattle Electrical Code*, which is the *National Electrical Code* with Seattle amendments.

[A] 101.2 Scope. This code establishes regulations affecting or relating to structures, processes, premises, vehicles, *vessels,* and safeguards regarding:

1. The hazard of fire and explosion arising from the storage, handling or use of structures, materials or devices;
2. Conditions hazardous to life, property or public welfare in the occupancy of structures, vehicles, *vessels,* or premises;
3. Fire hazards in the structure, vehicles, *vessels,* or on the premises from occupancy or operation;

4. Matters related to the construction, extension, repair, alteration or removal of fire suppression or alarm systems; and

5. Conditions affecting the safety of fire fighters and emergency responders during emergency operations.

[A] 101.2.1 Appendices. Provisions in the appendices ((~~shall~~)) do not apply unless specifically adopted.

[A] 101.3 Intent. The purpose of this code is to establish the minimum requirements consistent with nationally recognized good practice for providing a reasonable level of life safety and property protection from the hazards of fire, explosion or dangerous conditions in new and existing buildings, structures, ((~~and~~)) premises, vehicles, and *vessels* and to provide a reasonable level of safety to fire fighters and emergency responders during emergency operations.

This code is enacted as an exercise of the police power of The City of Seattle to protect the public peace, health, safety, and welfare, and its provisions shall be liberally construed to accomplish these purposes. The express purpose of this code is to promote the health, safety, and welfare of the general public, and not to create or otherwise establish or designate any particular class or group of persons who will or should be especially protected or benefitted by the terms of this code or ordinance.

The specific intent of this code is to place the obligation of complying with its requirements upon the *owners*, owner's authorized agents, or occupiers of premises, buildings, vehicles, *vessels*, and structures within its scope. No provision or term used in this code is intended to impose any duty whatsoever upon the city, or any of its officers or employees, for whom the implementation or enforcement of this code is discretionary, not mandatory.

* * *

101.6 Point of information or code interpretation. Text marked "Point of Information" or "Code Interpretation" in the *Seattle Fire Code* is for guidance only and does not have the force of law.

SECTION 102

APPLICABILITY

[A] 102.1 Construction and design provisions. The construction and design provisions of this code ((~~shall~~)) apply to:

1. Structures, facilities and conditions arising after the adoption of this code.
2. Existing structures, facilities and conditions not legally in existence at the time of adoption of this code.
3. Existing structures, facilities and conditions when required in Chapter 11.
4. Existing structures, facilities and conditions which, in the opinion of the *fire code official*, constitute a ((~~distinct~~)) imminent hazard to life or property.

* * *

[A] 102.5 Application of residential code. ((~~Where~~)) If structures are designed and constructed in accordance with the *International Residential Code*, the provisions of this code ((~~shall~~)) apply as follows:

1. Construction and design provisions: Provisions of this code pertaining to the exterior of the structure ((~~shall~~)) apply including, but not limited to, premises identification, fire apparatus access and water supplies. ((~~Where~~)) If interior or exterior systems or devices are installed, construction permits required by Section 105.7 of this code ((~~shall~~)) also apply.
2. Administrative, operational and maintenance provisions: All such provisions of this code ((~~shall~~)) apply.

* * *

[A] 102.7 Referenced codes and standards. The codes and standards referenced in this code ((~~shall be~~)) are those that are listed in Chapter 80, including amendments adopted by City Council by ordinance, and such codes and standards ((~~shall be~~)) are considered part of the requirements of this code to the prescribed extent of each such reference and as further regulated in Sections 102.7.1 and 102.7.2.

* * *

Part 2—ADMINISTRATIVE PROVISIONS

SECTION 103

DEPARTMENT OF FIRE PREVENTION

* * *

[A] 103.2 Appointment. ((~~The~~)) A *fire code official*, other than the fire chief, shall be appointed by the fire chief ((~~appointing authority of the jurisdiction~~)); and the *fire code official*, other than the fire chief, shall not be removed from office except for cause and after full opportunity to be heard on specific and relevant charges by and before the ((~~appointing authority~~)) fire chief.

* * *

[A] 103.4 Liability. Nothing contained in this code is intended to, nor shall be construed to, create or form the basis for any liability on the part of the city, its officers, employees or agents, for any injury or damage resulting from the failure of the owner or occupier of premises, buildings, structures, vehicles or *vessels*, to comply with this code, or for any injury or damage caused by any act or omission on the part of the city by its officers, employees or agents in the course of implementing or enforcing this code.

Any lawsuit brought against the city, or its officers, employees, or agents because of acts or omissions in the implementation or enforcement of this code, or other pertinent laws, ordinances, or regulations implemented through the enforcement of this code or enforced by the *fire code official*, shall, as provided by Seattle Municipal Code chapter 4.64, be defended by the City, and any resulting judgment or settlement shall be assumed or paid by the City as provided by Chapter 4.64 and other relevant sections of the *Seattle Municipal Code*.

Limited public funds are available for the implementation and enforcement of this code. The issuance of permits, reviews of permit applications, and inspections conducted pursuant to this code are spot checks designed to encourage compliance, and are not representations, guarantees, or assurances that permits, or work undertaken pursuant to issuance of permits, comply with any applicable codes.

((~~The *fire code official*, member of the board of appeals, officer or employee charged with the enforcement of this code, while acting for the jurisdiction, in good faith and without malice in the discharge of the duties required by this code or other pertinent law or ordinance, shall not thereby be rendered civilly or criminally liable personally, and is hereby relieved from all personal liability for any damage accruing to *persons* or property as a result of an act or by reason of an act or omission in the discharge of official duties.~~))

~~**[A] 103.4.1 Legal defense.** Any suit or criminal complaint instituted against any officer or employee because of an act performed by that officer or employee in the lawful discharge of duties and under the provisions of this code shall be defended by the legal representative of the jurisdiction until the final termination of the proceedings. The *fire code official* or any subordinate shall not be liable for costs in an action, suit or proceeding that is instituted in pursuance of the provisions of this code; and any officer of the department of fire prevention,~~

~~acting in good faith and without malice, shall be free from liability for acts performed under any of its provisions or by reason of any act or omission in the performance of official duties in connection therewith.~~))

SECTION 104

GENERAL AUTHORITY AND RESPONSIBILITIES

[A] 104.1 General. The *fire code official* is hereby authorized to enforce the provisions of this code and shall have the authority to render interpretations of this code, and to adopt policies, procedures, rules and regulations in order to implement this code and clarify the application of its provisions. Such interpretations, policies, procedures, rules and regulations shall be in compliance with the intent and purpose of this code and shall not have the effect of waiving requirements specifically provided for in this code.

* * *

[A] 104.3 Right of entry. Whenever it is necessary to make an inspection to enforce the provisions of this code, or whenever the *fire code official* has reasonable cause to believe that there exists in a building or upon any premises any conditions or violations of this code which make the building or premises unsafe, dangerous or hazardous, the *fire code official* shall have the authority to enter the building or premises at all reasonable times to inspect or to perform the duties imposed upon the *fire code official* by this code. If such building or premises is occupied, the *fire code official* shall present credentials to the occupant and request entry. If such building or premises is unoccupied, the *fire code official* shall first make a reasonable effort to locate the *owner*, the owner's authorized agent or other *person* having charge or control of the building or premises and request entry. If entry is refused, the *fire code official* has recourse to every remedy provided by law to secure entry.

104.3.1 Owner consent. With the consent of the *owner*, the owner's authorized agent or occupier of a building, premises, *vehicle*, or *vessel*, or pursuant to a lawfully issued warrant, the *fire code official* may enter any building, premises, *vehicle*, or *vessel* at any reasonable time to inspect or to perform the duties authorized by this code.

[A] 104.3.((~~1~~))2 Warrant. ((~~When the *fire code official* has first obtained a proper inspection warrant or other remedy provided by law to secure entry, an~~)) An *owner*, the owner's authorized agent or occupant or *person* having charge, care or control of the building or premises shall not fail or neglect, after ((~~proper request is made as herein provided,~~)) a warrant is presented to the person, to permit entry therein by the *fire code official* for the purpose of inspection and examination pursuant to this code.

[A] 104.4 Identification. The *fire code official* shall carry proper identification when inspecting structures or premises in the performance of duties under this code.

[A] 104.5 Notices and orders. The *fire code official* is authorized to issue such notices or orders as are required to affect compliance with this code in accordance with Sections 109 ((~~.1 and 109.2~~)), 110, and 111. The *fire code official* shall serve the responsible party with a copy of violations, correction letters, and orders issued.

[A] 104.6 Official records. The *fire code official* shall keep official records as required by Sections 104.6.1 through 104.6.4. Such official records shall be retained for not less than five years or for as long as the structure or activity to which such records relate remains in existence, unless otherwise provided by other laws or regulations.

[A] 104.6.1 Approvals. A record of approvals shall be maintained by the *fire code official* and shall be available for public inspection during business hours in accordance with applicable laws.

[A] 104.6.2 Inspections. The *fire code official* shall keep a record of ((~~each inspection made, including notices~~)) inspections, notices, violations, correction letters, and orders issued, showing the findings and disposition of each.

[A] 104.6.3 Fire records. The fire department shall keep a record of fires occurring within its jurisdiction and of facts concerning the same, including statistics as to the extent of such fires and the damage caused thereby, together with other information as required by the *fire code official*.

[A] 104.6.4 Administrative. Application for modification, alternative methods or materials and the final decision of the *fire code official* on any such application shall be in writing and shall be officially recorded in the permanent records of the *fire code official*.

* * *

[A] 104.10 Fire investigations. The fire code official, or the fire department ((~~or other responsible authority~~)) shall have the authority to investigate the cause, origin and circumstances of any fire, explosion or other hazardous condition. Information that could be related to trade secrets or processes shall not be made part of the public record, except as directed by a court of law.

104.10.1 Authority of Fire Department Fire Investigators to Exercise Powers of Police Officers. Members of the fire department Fire Investigation Unit (FIU) that have been granted Arson Investigator/Special Police Officer (SPO) commissions by the Chief of the Seattle Police Department in accordance with City of Seattle Ordinance 109759 shall have the powers described in the ordinance and other powers described in this code.

Fire Investigation Unit (FIU) fire investigators are authorized to take immediate charge of all physical evidence relating to the cause of the fire if it appears that such fire is of incendiary or undetermined origin.

[A] 104.10.((1))2 Assistance from other agencies. Police and other enforcement agencies shall have authority to render necessary assistance in the investigation of fires when requested to do so.

* * *

[A] 104.11.2 Obstructing operations. No *person* shall obstruct the operations of the fire department in connection with extinguishment, or control or investigation of any fire, or actions relative to other emergencies, or disobey any lawful command of the fire chief or officer of the fire department in charge of the emergency, or any part thereof, or any lawful order of a police officer assisting the fire department.

* * *

104.12 Vehicle impoundment and removal. The *fire code official* may order the owner or operator to remove from a street or premises, or request that the Seattle Police Department impound a vehicle under the following conditions:

1. The vehicle poses an immediate hazard to public safety; or
2. The vehicle is transporting hazardous materials, and is left unattended on a residential street or within 500 feet (152 400 mm) of any building containing a Group A, R, E, or I occupancy, including, but not limited to, any dwelling apartment, hotel, day care, school, hospital, or health care facility; or

3. The vehicle contains or is carrying hazardous materials, or flammable or combustible liquids or gases, and is left unattended while transferring such materials, liquids, or gases by means of hose line.

104.13 Prohibited uses, sales devices. The *fire code official* may prohibit the use, display, or sale of any device, material, or object that is designed to be used in such a manner as to violate any provisions of this code, or if the use or sale of such constitutes a distinct hazard to life or property. Any materials shown by nationally recognized fire test to have a life hazard greater than that indicated by the manufacturer's literature and controlled by building code interior finish regulations or fire code decorative material regulations are either prohibited or shall be installed or used with such additional fire safety features as are necessary to substantially reduce the life hazard.

104.14 Standby fire personnel and fire watch personnel. The *fire code official* has the authority to require, at no cost to the jurisdiction, standby fire personnel and/or fire watch personnel if in the opinion of the *fire code official* potentially hazardous conditions or reductions in a life safety feature exist. The *owner*, agent, or lessee shall provide one or more qualified persons, as required and approved, to be on duty. Such standby fire personnel or fire watch personnel shall be subject to the *fire code official's* orders at all times and remain on duty during the times such places are open to the public, when such activity is being conducted, or as required by the *fire code official*. Fire watch personnel are not employees or agents of the city.

SECTION 105

PERMITS AND CERTIFICATES

[A] 105.1 General. Permits shall be in accordance with Sections 105.1.1 through 105.7.14. Certificates issued by the *fire code official* are revocable in accordance with the provisions of section 105.5.

[A] 105.1.1 Permits required. Any property owner or owner's authorized agent who intends to conduct an operation or business, or install or modify systems and equipment that are regulated by this code, or to cause any such work to be performed, shall first make application to the *fire code official* and obtain the required permit. Permit fees, if any, may be required to be paid prior to issuance of the permit. Failure to pay the required permit fee may result in cancellation of the permit.

* * *

[A] 105.1.4 Emergency repairs. ((~~Where equipment replacement and repairs must be performed in an emergency situation, the permit application shall be submitted within the next working business day to the fire code official.~~)) If a permit is required by this Code before equipment may be replaced or repaired but cannot reasonably be obtained beforehand due to an emergency, the permit application shall be submitted to the fire code official the next business day following cessation of the emergency.

[A] 105.1.5 Repairs. Application or notice to the fire code official is not required for ordinary repairs to structures, equipment or systems. ((Such)) Ordinary repairs ((shall)) do not include the cutting away of any wall, partition or portion thereof, the removal or change of any required means of egress, or rearrangement of parts of a structure affecting ((~~the~~)) egress requirements ((~~; nor shall~~)) or any repairs ((~~include~~)) including the addition to, alteration of, replacement or

relocation of any standpipe, fire protection water supply, automatic sprinkler system, fire alarm system or other work affecting fire protection or life safety.

[A] 105.1.6 Annual permit. Instead of an individual construction permit for each alteration to an already approved system or equipment installation, the fire code official ((~~is authorized to~~)) may issue an annual permit ((~~upon application therefor~~)) to any person, firm or corporation regularly employing one or more qualified tradespersons in the building, structure or on the premises owned or operated by the applicant for the permit.

[A] 105.1.6.1 Annual permit records. The person to whom an annual permit is issued shall keep a detailed record of alterations made under such annual permit. The fire code official shall have access to such records at all times or such records shall be filed with the fire code official as ((~~designated~~)) in accordance with applicable laws.

* * *

[A] 105.2 Application. Application for a permit required by this code shall be made to the *fire code official* in such form and detail as prescribed by the *fire code official*. Applications for permits shall be accompanied by such plans as prescribed by the *fire code official*.

[A] 105.2.1 Refusal to issue permit. If the application for a permit describes ((~~a use~~)) an activity that does not conform to the requirements of this code and other pertinent laws and ordinances, the *fire code official* ((~~shall~~)) may not issue a permit, ((~~but shall~~)) and may return the application to the applicant with the refusal to issue such permit. Such refusal shall, when requested, be in writing and shall contain the reasons for refusal.

* * *

[A] 105.2.4 Action on application. The *fire code official* shall examine or cause to be examined applications for permits and amendments thereto within a reasonable time after filing. If the

application or the *construction documents* do not conform to the requirements of pertinent laws, the *fire code official* ((~~shall~~)) may reject such application in writing, stating the reasons therefor. If the *fire code official* is satisfied that the proposed work or operation conforms to the requirements of this code and laws and ordinances applicable thereto, the *fire code official* shall issue a permit ((~~therefor~~)) as soon as practicable.

[A] 105.3 Conditions of a permit. The *fire code official* may condition any permit, increasing or decreasing the scope of permitted activity, and/or specifying fire safety provisions in addition to those established by this code, if the *fire code official* deems such conditions necessary to provide reasonable public safety. A permit shall constitute permission to maintain, store or handle materials; or to conduct processes which produce conditions hazardous to life or property; or to install equipment utilized in connection with such activities; or to install or modify any *fire protection system* or equipment or any other construction, equipment installation or modification in accordance with the provisions of this code where a permit is required by Section 105.6 or 105.7. Such permission shall not be construed as authority to violate, cancel or set aside any of the provisions of this code or other applicable regulations or laws of the jurisdiction.

* * *

[A] 105.3.3 ((~~Occupancy~~)) Operations prohibited before approval. ((~~The building or structure shall not be occupied~~)) Activities that require an operational permit or installations that require construction permits shall not commence or be used prior to the *fire code official* issuing a permit and conducting associated inspections indicating the applicable provisions of this code have been met.

105.3.4 Point of Information

Approval to occupy a building or structure is granted by the Seattle Department of Construction and Inspections through issuance of a Certificate of Occupancy or Temporary Certificate of Occupancy. A Fire Department recommendation to issue an occupancy certificate is conditioned upon applicable provisions of this code being met.

[A] 105.3.4 ((~~Conditional permits~~)) Temporary certificate of occupancy. ((~~Where permits are required and upon the request of a permit applicant, t~~)) The *fire code official* is authorized to recommend to the *building code official* that a Temporary Certificate of Occupancy be issued granting permission ((~~a conditional permit~~)) to occupy the premises or portion thereof before the entire work or operations on the premises is completed, provided that such portion or portions will be occupied safely prior to full completion or installation of equipment and operations without endangering life or public welfare. The *fire code official* shall notify the ((~~permit applicant~~)) *building code official* in writing of any limitations or restrictions necessary to keep the ((~~permit~~)) occupied area safe. The holder of a ((~~conditional permit~~)) temporary certificate of occupancy shall proceed only to the point for which approval has been given, at the permit holder's own risk and without assurance that approval for the occupancy or the utilization of the entire premises, equipment or operations will be granted.

* * *

105.3.9 Liability Insurance. If liability insurance is required by any section of this code as a permit condition or for a license, the applicant shall maintain continuously on file with the *fire code official* for the entire period of the licensed or permitted activity, evidence of "Commercial General Liability" ("CGL") insurance coverage with a minimum limit of liability of $2,000,000 per occurrence and $2,000,000 general aggregate and $2,000,000 products-completed operations

aggregate. Coverage shall not be subject to a deductible. Such evidence of insurance coverage shall be provided on an Acord Certificate of Liability Insurance or equivalent ("Certificate") issued to "Seattle Fire Department, 301 2nd Ave S., Seattle, WA 98104." This policy shall include an additional insured endorsement in the name of "The City of Seattle" per CG2026 or equivalent. Permittee's insurance will be primary and non-contributory. Copies of these endorsements must be attached to the Certificate. The *fire code official* may increase or decrease the above-stated minimum limits of liability.

If the issuance of a license or permit is conditioned upon obtaining CGL insurance by the applicant for such permit, the policy shall be:

1. Issued by an insurance company or companies with a best rating of A-VIII or better and authorized to do business as an insurer in Washington State pursuant to the provisions of RCW Title 48;
2. Issued for the purpose of complying with the conditions and requirements of Section 105 of the *Seattle Fire Code*;
3. Applicant shall obtain a written obligation on the part of the insurance company to provide written notice to the *fire code official* of at least thirty (30) days of cancellation or non-renewal, except 10 days' notice cancellation for nonpayment of premium is allowed, or as specified in RCW 48.18.290, if applicable; and
4. Subject to approval as to sufficiency and form by the City's Risk Management Division at the request of the *fire code official*.

[A] 105.4 Construction documents. *Construction documents* shall be in accordance with this section.

[A] 105.4.1 Submittals. *Construction documents* and supporting data shall be submitted in ((~~two~~)) one or more sets with each application for a permit and in such form and detail as required by the *fire code official*. The *construction documents* shall be prepared by a registered design professional where required by the ((~~statutes of the jurisdiction in which the project is to be constructed~~)) *fire code official*.

Exception: The *fire code official* is authorized to waive the submission of *construction documents* and supporting data not required to be prepared by a registered design professional if it is found that the nature of the work applied for is such that review of *construction documents* is not necessary to obtain compliance with this code.

[A] 105.4.1.1 Examination of documents. The *fire code official* ((~~shall~~)) may examine or cause to be examined the accompanying *construction documents* and shall ascertain by such examinations whether the work indicated and described is in accordance with the requirements of this code.

* * *

[A] 105.4.4.1 Phased approval. The *fire code official* is authorized to issue a permit for the construction of part of a structure, system or operation before the *construction documents* for the whole structure, system or operation have been submitted, ((~~provided that~~)) if adequate information and detailed statements have been filed complying with pertinent requirements of this code. The holder of such permit for parts of a structure, system or operation shall proceed at the holder's own risk ((~~with the building operation~~)) and without assurance that a permit for the entire structure, system or operation will be granted.

* * *

((~~[A] **105.4.6 Retention of construction documents.** One set of *construction documents* shall be retained by the *fire code official* for a period of not less than 180 days from date of completion of the permitted work, or as required by state or local laws. One set of *approved construction documents* shall be returned to the applicant, and said set shall be kept on the site of the building or work at all times during which the work authorized thereby is in progress.~~))

[A]105.5 Revocation of permits and certificates. Revocation of permits and certificates shall be in accordance with this section. ((~~The *fire code official* is authorized to revoke a permit issued under the provisions of this code when it is found by inspection or otherwise that there has been a false statement or misrepresentation as to the material facts in the application or *construction documents* on which the permit or approval was based including, but not limited to, any one of the following:~~

~~1. The permit is used for a location or establishment other than that for which it was issued.~~

~~2. The permit is used for a condition or activity other than that listed in the permit.~~

~~3. Conditions and limitations set forth in the permit have been violated.~~

~~4. There have been any false statements or misrepresentations as to the material fact in the application for permit or plans submitted or a condition of the permit.~~

~~5. The permit is used by a different *person* or firm than the name for which it was issued.~~

~~6. The permittee failed, refused or neglected to comply with orders or notices duly served in accordance with the provisions of this code within the time provided therein.~~

~~7. The permit was issued in error or in violation of an ordinance, regulation or this code.~~))

105.5.1 Nonemergency revocations, suspensions and denials of renewals. In accordance with applicable law, the *fire code official* may revoke or suspend a permit or certificate or deny a request to renew any permit or certificate upon evidence submitted to the *fire code official* that

conditions or circumstances have changed so that continued use of the permit or certificate would be unsafe or would violate this code. Such conditions or circumstances include, but are not limited to:

1. The permit has been used by a person other than the person to whom the permit was issued,
2. The permit has been used for a location other than that for which it was issued,
3. Any of the conditions or limitations in the permit or the code have been violated,
4. The permittee failed, refused, or neglected to comply within the time provided with orders or notices duly served in accordance with the provisions of this code,
5. There has been a false statement or misrepresentation as to a material fact in the application or plans on which the permit or application was based, or
6. The permit was issued in error or in violation of any code, regulation or other law.

105.5.1.1 Notification. The permit or certificate holder shall be notified in writing no later than five business days prior to the revocation, suspension or denial of a request to renew such permit or certificate.

105.5.1.2 Requesting a hearing. The permit or certificate holder may request in writing a hearing before the *fire code official* for reconsideration of the decision to revoke, suspend or deny renewal. The request shall be filed with the *fire code official* by 5 o'clock p.m. of the fifth business day following service of the notice.

105.5.1.3 Hearing. The hearing, if one is requested, shall be held no later than five business day after receipt of the written request.

105.5.1.4 Final decision. The *fire code official* shall issue a final decision, in writing, sustaining, modifying, or withdrawing the initial decision to revoke, suspend or deny a request to renew the

permit or certificate no later than the fifth business day following such hearing. Further appeals shall be in accordance with Section 108 of this code.

105.5.2 Emergency Revocations, suspensions, and denials of requests to renew. The fire *code official* may revoke, suspend or deny a request to renew a permit or certificate in emergency situations, without providing prior notice to the permit or certificate holder, if an imminent fire, life-safety, or other hazard regulated by this code exists, and failure to take immediate action may cause imminent harm to humans, domestic animals, livestock, wildlife, or to the immediate or neighboring property, lands, or premises.

105.5.2.1 Surrendering permits or certificates. If such emergency is found to exist and if the fire code official revokes, suspends, or refuses to renew a permit or certificate, all certificates and permits shall be surrendered to the *fire code official* or his/her authorized representative upon demand.

105.5.2.2 Suspending activities. The activities sanctioned by the suspended or revoked certificates or permits shall be suspended until the *fire code official* finds the emergency no longer exists and reinstates the permit or certificate.

105.5.2.3 Requesting an appeal. Persons whose permits or certificates have been revoked or suspended without notice may appeal the *fire code official's* action by filing a written notice of appeal to the *fire code official* by 5 o'clock p.m. of the fifth business day following such revocation, suspension or denial or a request to renew a permit or certificate.

105.5.2.4 Hearing. The hearing with the *fire code official* shall be no later than five business days from the receipt of such written appeal.

105.5.2.5 Final decision. The *fire code official* shall issue a final decision in writing, sustaining, modifying, or withdrawing the initial decision to revoke, suspend, or deny a request to renew the certificate or permit no later than the fifth business day following such hearing.

105.5.2.6 Further appeals. Further appeals shall be in accordance with Section 108 of this code.

[A] 105.6 Required operational permits. The *fire code official* is authorized to issue operational permits for the operations set forth in Sections 105.6.1 through 105.6.((~~46.~~))55.

[A] 105.6.1 Aerosol products. An operational permit is required to manufacture, store or handle an aggregate quantity of Level 2 or Level 3 aerosol products in excess of 500 pounds (227 kg) net weight.

[A] 105.6.2 Amusements buildings. An operational permit is required to operate a special amusement building.

[A] 105.6.3 Aviation facilities. An operational permit is required to use a Group H or Group S occupancy for aircraft servicing or repair and aircraft fuel-servicing vehicles. Additional permits required by other sections of this code include, but are not limited to, hot work, hazardous materials and flammable or combustible finishes.

105.6.4 Bonfires. An operational permit is required to ignite a bonfire.

[A] 105.6.((4))5 Carbon dioxide systems used in beverage dispensing applications. An operational permit is required for carbon dioxide systems used in beverage dispensing applications having more than 100 pounds of carbon dioxide

[A] 105.6.((~~5~~))6 Carnivals and fairs. ((~~An operational permit is required to conduct a carnival or fair.~~)) See 105.6.41, Outdoor Assembly Event.

[A] 105.6.((~~6~~))7 Cellulose nitrate film. An operational permit is required to store, handle or use cellulose nitrate film in a Group A occupancy.

[A] 105.6.((~~7~~))8 Combustible dust-producing operations. An operational permit is required to operate a grain elevator, flour starch mill, feed mill, or a plant pulverizing aluminum, cola, cocoa, magnesium, spices or sugar, or other operations producing *combustible dusts* as defined in Chapter 2.

[A] 105.6.((~~8~~))9 Combustible fibers. An operational permit is required for the storage and handling of *combustible fibers* in quantities greater than 100 cubic feet (2.8 m^3).

Exception: A permit is not required for agricultural storage.

105.6.10 Combustible storage. An operational permit is required to store in any building or upon any premises class III or higher hazard commodities in excess of 2,500 cubic feet gross volume.

[A] 105.6.((~~9~~))11 Compressed gases. An operational permit is required for the storage, use or handling at *normal temperature and pressure* (NTP) of compressed gases in excess of the amounts listed in Table 105.6.11 ((~~8~~)).

Exception: Vehicles equipped for and using *compressed gas* as a fuel for propelling the vehicle.

TABLE 105.6.((~~8~~))11
PERMIT AMOUNTS FOR COMPRESSED GASES

TYPE OF GAS	AMOUNT (cubic feet at NTP)
Corrosive	200
Flammable (except *cryogenic fluids* and liquefied petroleum gases)	200
Highly toxic	Any Amount
Inert and simple asphyxiant	6,000
Oxidizing (including oxygen)	504
Pyrophoric	Any Amount
Toxic	Any Amount

For SI: 1 cubic foot = 0.02832 m^3.

a. For carbon dioxide used in beverage dispensing applications, see Section 105.6.5((4))

[A] 105.6.((~~10~~))12 Covered and open mall buildings. An operational permit is required for:

1. The placement of retail fixtures and displays, concession equipment, displays of highly combustible goods and similar items in the mall.
2. The display of liquid- or gas-fired equipment in the mall.
3. The use of open-flame or flame-producing equipment in the mall.
4. The use of covered mall buildings for assembly purposes.

[A] 105.6.((~~11~~))13 Cryogenic fluids. An operational permit is required to produce, store, transport on site, use, handle or dispense cryogenic fluids in excess of the amounts listed in Table 105.6.((~~10~~))13.

Exception: Permits are not required for vehicles equipped for and using *cryogenic fluids* as a fuel for propelling the vehicle or for refrigerating the lading.

TABLE 105.6.((~~10~~))13
PERMIT AMOUNTS FOR CRYOGENIC FLUIDS

TYPE OF CRYOGENIC FLUID	INSIDE BUILDING (gallons)	OUTSIDE BUILDING (gallons)
Flammable	More than 1	60
Inert	60	500
Oxidizing (includes oxygen)	10	50
Physical or health hazard not indicated above	Any Amount	Any Amount

For SI: 1 gallon = 3.785 L.

[A] 105.6.((~~12~~))14 Cutting and welding. An operational permit is required to conduct cutting or welding operations within the jurisdiction. See 105.6.28, Hot Work Operations.

[A] 105.6.((~~13~~))15 Dry Cleaning. An operational permit is required to engage in the business of dry cleaning or to change to a more hazardous cleaning solvent used in existing dry cleaning equipment.

[A] 105.6.((~~14~~))16 Exhibits and trade shows. An operational permit is required to operate exhibits and trade shows.

[A] 105.6.((~~15~~))17 Explosives. An operational permit is required for the ((~~manufacture,~~)) storage, handling, sale or use of any quantity of *explosives*, *explosive materials*, fireworks or pyrotechnic special effects within the scope of Chapter 56.

Exception: Storage in Group R-3 occupancies of smokeless propellant, black powder and small arms primers for personal use, not for resale and in accordance with Section 5606.

105.6.17 Point of Information

The manufacture of *explosives* is prohibited within Seattle City limits.

[A] 105.6.((~~16~~))18 Fire hydrant and valves. An operational permit is required to use or operate fire hydrant or valves intended for fire suppression purposes which are installed on water systems and accessible to a fire apparatus access road that is open to or generally used by the public.

Exception: A permit is not required for authorized employees of the water company that supplies the system or the fire department to use or operate fire hydrants or valves.

[A] 105.6.((~~17~~))19 Flammable and combustible liquids. An operational permit is required:

1. To use or operate a pipeline for the transportation within facilities of flammable or *combustible liquids*. This requirement shall not apply to the off-site transportation in pipelines regulated by the Department of Transportation (DOTn) nor does it apply to piping systems.
2. To store, handle or use Class I liquids in excess of 5 gallons (19 L) in a building or in excess of 10 gallons (37.9 L) outside of a building, except that a permit is not required for the following:
   2.1. The storage or use of Class I liquids in the fuel tank of a motor vehicle, aircraft, motorboat, mobile power plant or mobile heating plant, or storage of *approved* portable motor boat fuel containers of 6 gallons or less individual capacity and 12 gallons

aggregate capacity, unless such storage, in the opinion of the *fire code official*, would cause an unsafe condition.

2.2. The storage or use of paints, oils, varnishes or similar flammable mixtures when such liquids are stored for maintenance, painting or similar purposes for a period of not more than 30 days.

3. To store, handle or use Class II or Class IIIA liquids in excess of 25 gallons (95 L) in a building or in excess of 60 gallons (227 L) outside a building, except for fuel oil used in connection with oil-burning equipment.

4. To store, handle or use Class IIIB liquids in tanks or portable tanks for fueling motor vehicles at motor Fuel-dispensing facilities or where connected to fuel-burning equipment.

Exception: Fuel oil and used motor oil used for space heating or water heating.

5. To remove Class I or II liquids from an underground storage tank used for fueling motor vehicles by any means other than the *approved*, stationary on-site pumps normally used for dispensing purposes.

6. To operate tank vehicles, equipment, tanks, plants, terminals, wells, fuel-dispensing stations, refineries, distilleries and similar facilities where flammable and *combustible liquids* are produced, processed, transported, stored, dispensed or used.

7. To place temporarily out of service (for more than 90 days) an underground, protected above-ground or above-ground flammable or *combustible liquid* tank.

8. To change the type of contents stored in a flammable or *combustible liquid* tank to a material that poses a greater hazard than that for which the tank was designed and constructed.

9. To manufacture, process, blend or refine flammable or *combustible liquids*.

10. To engage in the dispensing of liquid fuels into the fuel tanks of motor vehicles at commercial, industrial, governmental or manufacturing establishments.

11. To utilize a site for the dispensing of liquid fuels from tank vehicles into the fuel tanks of motor vehicles, marine craft and other special equipment at commercial, industrial, governmental or manufacturing establishments.

12. To engage in the business of removing, abandoning, or otherwise disposing of residential heating oil tanks.

[A] 105.6.((~~18~~))20 Floor finishing. An operational permit is required for floor finishing or surfacing operations exceeding 350 square feet (33 m^2) using Class I or Class II liquids.

[A] 105.6.((~~19~~))21 Fruit and crop ripening. An operational permit is required to operate a fruit- or crop-ripening facility or conduct a fruit-ripening process using ethylene gas.

[A] 105.6.((~~20~~))22 Fumigation and insecticidal fogging. An operational permit is required to operate a business of fumigation or insecticidal fogging and to maintain a room, vault, freight container, or chamber in which a toxic or flammable fumigant is used.

[A] 105.6.((~~21~~))23 Hazardous materials. An operational permit is required to store, transport on site, dispense, use or handle hazardous materials in excess of the amounts listed in Table 105.6.((~~21~~))23.

105.6.24 Hazardous materials stabilization. A temporary permit is required to stabilize potentially unstable (reactive) hazardous materials.

[A] 105.6.((~~22~~))25 HPM facilities. An operational permit is required to store, handle or use hazardous production materials.

[A] 105.6.((~~23~~))26 High-piled storage. An operational permit is required to use a building or portion thereof as a *high piled storage area* exceeding 500 square feet (46 m^2).

TABLE 105.6.23 ((~~21~~))
PERMIT AMOUNTS FOR HAZARDOUS MATERIALS

TYPE OF MATERIAL	AMOUNT
Combustible liquids	See Section 105.6.((~~17~~))19
Corrosive materials	
Gases	See Section 105.6.((~~8~~))11
Liquids	55 gallons
Solids	1000 pounds
Explosive materials	See Section 105.6.((~~14~~))17
Flammable materials	
Gases	See Section 105.6.((~~8~~))11
Liquids	See Section 105.6.((~~16~~))19
Solids	100 pounds
Highly toxic materials	
Gases	See Section 105.6.((~~8~~))11
Liquids	Any Amount
Solids	Any Amount
Oxidizing materials	
Gases	See Section 105.6.((~~8~~))11
Liquids	
Class 4	Any Amount
Class 3	1 gallon[a]
Class 2	10 gallons
Class 1	55 gallons
Solids	
Class 4	Any Amount
Class 3	10 pounds[b]
Class 2	100 pounds
Class 1	500 pounds
Organic peroxides	
Liquids	
Class I	Any Amount
Class II	Any Amount
Class III	1 gallon
Class IV	2 gallons
Class V	No Permit Required
Solids	
Class I	Any Amount
Class II	Any Amount
Class III	10 pounds
Class IV	20 pounds
Class V	No Permit Required
Pyrophoric materials	
Gases	Any Amount
Liquids	Any Amount

Solids	Any Amount
Toxic materials	
Gases	See Section 105.6.((~~8~~))11
Liquids	10 gallons
Solids	100 pounds
Unstable (reactive) materials	
Liquids	
Class 4	Any Amount
Class 3	Any Amount
Class 2	5 gallons
Class 1	10 gallons
Solids	
Class 4	Any Amount
Class 3	Any Amount
Class 2	50 pounds
Class 1	100 pounds
Water-reactive materials	
Liquids	
Class 3	Any Amount
Class 2	5 gallons
Class 1	55 gallons
Solids	
Class 3	Any Amount
Class 2	50 pounds
Class 1	500 pounds

[A] 105.6.((~~24~~))27 Hot work operations. An operational permit is required for hot work including, but not limited to:

1. Public exhibitions and demonstrations where hot work is conducted.

2. Use of portable hot work. ((~~equipment inside a structure.~~))

Exception: ((~~Work that is conducted under a construction permit.~~)) Approved self-contained torch assemblies or similar appliances using LP-gas in accordance with the following:

a. LP-gas cylinders that comply with UL 147A, Standard for Nonrefillable (Disposable) Type Fuel Gas Cylinder Assemblies.

b. LP-gas cylinders that have a maximum water capacity of 2.7 lb (1.2 kg).

c. The maximum aggregate water capacity of LP-gas cylinders in storage (e.g. not connected for use) and use does not exceed 2.7 lb (1.2 kg) per control area.

3. Fixed-site hot work equipment such as welding booths.

4. Hot work conducted within a wildfire risk area.

5. Application of roof coverings with the use of an open-flame device.

6. Hot work on storage tanks, piping and associated systems containing or previously containing flammable or combustible liquids, or other hazardous materials that could present a fire or explosion hazard.

7. Hot work on *vessels.*

8.((~~6.~~)) When *approved*, the *fire code official* shall issue a permit to carry out a hot work program. This program allows *approved* personnel to regulate their facility's hot work operations. The *approved* personnel shall be trained in the fire safety aspects denoted in this chapter and shall be responsible for issuing permits requiring compliance with the requirements found in Chapter 35. These permits shall be issued only to their employees or hot work operations under their supervision.

[A] 105.6.((~~25~~))28 Industrial ovens. An operational permit is required for operation of industrials ovens regulated by Chapter 30.

[A] 105.6.((~~26~~))29 Lumber yards and woodworking plants. An operational permit is required for the storage or processing of lumber exceeding 100,000 board feet (8,333 ft^3) (236 m^3).

[A] 105.6.((~~27~~))30 Liquid- or gas-fueled vehicles or equipment in assembly buildings. An operational permit is required to display, operate or demonstrate liquid- or gas-fueled vehicles or equipment in assembly buildings.

[A] 105.6.((~~28~~))31 LP-gas. An operational permit is required for:

1. Storage and use of LP-gas.

Exceptions:

1. A permit is not required for individual containers with a 500-gallon (1893 L) water capacity or less or multiple container systems having an aggregate quantity not exceeding 500 gallons (1893 L), serving occupancies in Group R-3.

2. A permit is not required for LP-gas containers having a water capacity not exceeding 48 pounds [nominal 20 pounds (9 kg) LP-gas] connected to a LP-gas grill unless located at a public assembly or on a public way, or if used for commercial purposes.

3. A permit is not required for storage of up to three spare forklift containers each having a maximum individual water capacity of 104 pounds (10 gallons LP-gas).

2. Operation of cargo tankers that transport LP-gas.

[A] 105.6.((~~29~~))32 Magnesium. An operational permit is required to melt, cast, heat treat or grind more than 10 pounds (4.54 kg) of magnesium.

105.6.33 Marine terminal and container freight stations. An annual operational permit is required to handle or temporarily locate containers, tanks, or cylinders of hazardous materials at marine terminals and container freight stations located within the Seattle City limits.

((~~[A] **105.6.29 Miscellaneous combustible storage.** An operational permit is required to store in any building or upon any premises in excess of 2,500 cubic feet (71m3) gross volume of combustible empty packing cases, boxes, barrels or similar containers, rubber tires, rubber, cork or similar combustible material.~~))

105.6.((~~31~~))34 Motor fuel-dispensing facilities. An operational permit is required for the operation of automotive, marine and fleet motor fuel-dispensing facilities.

[A] 105.6.((~~32~~))35 Open burning. Open burning is prohibited in the City of Seattle. ((~~An operational permit is required for the kindling or maintaining of an open fire or a fire on any public street, alley, road, or other public or private ground. Instructions and stipulations of the permit shall be adhered to.~~

~~**Exception:** *Recreational fires.*~~))

[A] 105.6.((~~33~~))36 Open flames and torches. An operational permit is required to remove paint with a torch; or to use a torch or open-flame device in a wildfire risk area.

[A] 105.6.((~~34~~))37 ((~~Open flames and c~~)) Candles. An operational permit is required to use open flames or candles in connection with assembly areas, dining areas of restaurants or drinking establishments.

Exception: A separate open flame and candle permit is not required at a facility with a valid place of assembly permit.

105.6.38 Open flames, open flame devices and flame effects before an audience. An operational permit is required to use of open flames, open flame devices, flame effects, fire, or burning before an audience in connection with Group A, B or E occupancies, covered malls and outdoor assembly events.

Exception: A permit is not required for the use of flame effects outdoors, unless located at an outdoor assembly event.

[A] 105.6.((~~35~~))39 Organic coatings. An operational permit is required for any organic-coating manufacturing operation producing more than 1 gallon (4 L) of organic coating in one day.

105.6.40 Outdoor assembly event. An operational permit is required to operate an *outdoor assembly event.*

[A] 105.6.((~~36~~))41 Places of assembly. An operational permit is required to operate a place of *assembly* with an occupant load of 100 or more.

[A] 105.6.((~~37~~))42 Private fire hydrants. An operational permit is required for the removal from service, use or operation of private fire hydrants.

Exception: A permit is not required for private industry with trained maintenance personnel, private fire brigade or fire departments to maintain, test and use private fire hydrants.

[A] 105.6.((~~38~~))43 Pyrotechnic special effects material. An operational permit is required for use and handling of pyrotechnic special effects material.

[A] 105.6.((~~39~~))44 Pyroxylin plastics. An operational permit is required for storage or handling of more than 25 pounds (11 kg) of cellulose nitrate (pyroxylin) plastics, and for the assembly or manufacture of articles involving pyroxylin plastics.

[A] 105.6.((~~40~~))45 Refrigeration equipment. An operational permit is required to operate a mechanical refrigeration unit or system as regulated by Chapter 6.

Exception: Refrigeration systems that have a valid annual mechanical permit from the Seattle Department of Construction and Inspections.

[A] 105.6.((~~41~~))46 Repair garages ((~~and motor fuel-dispensing facilities~~)). An operational permit is required for operation of repair garages, and automotive, marine and fleet motor fuel-dispensing facilities.

[A] 105.6.((~~42~~))47 Rooftop heliports. An operational permit is required for the operation of a rooftop heliport.

[A] 105.6.((~~43~~))48 Spraying or dipping. An operational permit is required to conduct a spraying or dipping operation utilizing flammable or *combustible liquids* or the application of combustible powders regulated by Chapter 24.

Exception: Mobile spray coaters licensed by, and meeting the requirements of, the Puget Sound Clean Air Agency.

105.6.48 Point of Information

A no-fee operational permit is required for spraying operations utilizing water-based paints in accordance with Chapter 24.

[A] 105.6.((44))49 Storage of tires, scrap tires and tire byproducts. An operational permit is required to establish, conduct or maintain outdoor storage of 500 or more tires and scrap tires ((~~and~~)) or tire byproducts that exceeds 2,500 cubic feet (71 m^3) of total volume ((~~of scrap tires~~)) and for indoor storage of tires and tire byproducts when required by Section 105.6.26 or 105.6.10.

105.6.50 Temporary assembly occupancy. An operational permit is required to use any building or structure, or portion thereof, other than for established Group A occupancies for assembly purposes where the occupant load is more than 50 persons. Plans shall be submitted to the *fire code official* at least 30 days prior to the event where temporary *alterations* are made to the existing *means of egress*. The number of such permits for any building or structure, or portion thereof, is limited to one per quarter. Additional permits may be issued where application for a change of use for the building, or structure, or portion thereof, has been approved by the Seattle Department of Construction and Inspections (SDCI) with the approval of SDCI.

[A] 105.6.((45))51 Temporary membrane structures and tents. See 105.7.18. ((~~An operational permit is required to operate an air-supported temporary membrane structure, a temporary stage canopy or a tent having an area in excess of 400 square feet (37 m2).~~

~~**Exceptions:**~~

~~1. Tents used exclusively for recreational camping purposes.~~

~~2. Tents open on all sides, which comply with all of the following:~~

~~2.1. Individual tents having a maximum size of 700 square feet (65 m2).~~

~~2.2. The aggregate area of multiple tents placed side by side without a fire break clearance of not less than 12 feet (3658 mm) shall not exceed 700 square feet (65 m2) total.~~

~~2.3. A minimum clearance of 12 feet (3658 mm) to structures and other tents shall be provided.~~))

[A] 105.6.((~~46~~))52 Tire-rebuilding plants. An operational permit is required for the operation and maintenance of a tire-rebuilding plant.

[A] 105.6.((~~47~~))53 Waste handling. An operational permit is required for the operation of wrecking yards, junk yards and waste material-handling facilities.

[A] 105.6.((~~48~~))54 Wood products. An operational permit is required to store chips, hogged material, lumber or plywood in excess of 200 cubic feet (6 m^3).

105.7 Required ((~~construction~~)) installation permits. The *fire code official* is authorized to issue ((~~construction~~)) installation permits for work as set forth in Sections 105.7.1 through 105.7.18.

105.7 Point of Information

Building permits for construction are issued by the Seattle Department of Construction and Inspections (DPD). The fire code does not require separate Fire Department issued construction permits for the following systems and equipment:

- Automatic fire-extinguishing systems.
- Battery systems.
- Emergency responder radio coverage systems.
- Fire alarm and detection systems and related equipment.
- Fire pump and related equipment

• Standpipe systems.

Fire Department Installation and Operational Permits

If a Fire Department installation permit is required and an operational permit is also required, the *approved* installation permit is considered the initial operating permit, valid for one year.

[A] 105.7.1 Automatic fire-extinguishing systems. A construction permit issued by the Seattle Department of Construction and Inspections is required for installation of or modification to an automatic fire-extinguishing system. Maintenance performed in accordance with this code is not considered a modification and does not require a permit.

[A] 105.7.2 Battery systems. A permit issued by the Seattle Department of Construction and Inspections is required to install stationary storage battery systems having a liquid capacity of more than 50 gallons (189 L).

[A] 105.7.3 Compressed gases. When the *compressed gases* in use or storage exceed the amounts listed in Table 105.6.((~~8~~)) 11, an ((~~construction~~)) installation permit is required to install, repair damage to, abandon, remove, place temporarily out of service, or close or substantially modify a *compressed gas* system.

Exceptions:

1. Routine maintenance.
2. For emergency repair work performed on an emergency basis, application for permit shall be made within two working days of commencement of work.

[A] 105.7.4 Cryogenic fluids. An ((~~construction~~)) installation permit is required for installation of or *alteration* to outdoor stationary *cryogenic fluid* storage systems where the system capacity exceeds the amounts listed in Table 105.6.((~~10~~)) 13. Maintenance performed in accordance with this code is not considered an *alteration* and does not require a construction permit.

[A] 105.7.5 Emergency responder radio coverage system. A construction permit issued by the Seattle Department of Construction and Inspections is required for installation of or modification to emergency responder radio coverage systems and related equipment. Maintenance performed in accordance with this code is not considered a modification and does not require a permit.

[A] 105.7.6 Fire alarm and detection systems and related equipment. A construction permit issued by the Seattle Department of Construction and Inspections is required for installation of or modification to fire alarm and detection systems and related equipment. Maintenance performed in accordance with this code is not considered a modification and does not require a permit.

[A] 105.7.7 Fire pumps and related equipment. A construction permit issued by the Seattle Department of Construction and Inspections is required for installation of or modification to fire pumps and related fuel tanks, jockey pumps, controllers and generators. Maintenance performed in accordance with this code is not considered a modification and does not require a permit.

[A] 105.7.8 Flammable and combustible liquids. An ((~~construction~~)) installation permit is required:

1. To install, repair or modify a pipeline for the transportation of flammable or *combustible liquids*.
2. To install, construct or alter tank vehicles, equipment, tanks, plants, terminals, wells, fuel-dispensing stations, refineries, distilleries and similar facilities where flammable and *combustible liquids* are produced, processed, transported, stored, dispensed or used.
3. To install, alter, remove, abandon or otherwise dispose of a flammable or combustible liquid tank.

[A] 105.7.9 Gates and barricades across fire apparatus access roads. An ((~~construction~~)) installation permit is required for the installation of or modification to a gate or barricade across a fire apparatus access road.

[A] 105.7.10 Hazardous materials. An ((~~construction~~)) installation permit is required to install, repair damage to, abandon, remove, place temporarily out of service, or close or substantially modify a storage facility or other area regulated by Chapter 50 when the hazardous materials in use or storage exceed the amounts listed in Table 105.6.((~~20~~)) ~~23~~.

Exceptions:

1. Routine maintenance.
2. For emergency repair work performed on an emergency basis, application for permit shall be made within two working days of commencement of work.

[A] 105.7.11 Industrial ovens. An ((~~construction~~)) installation permit is required for installation of industrial ovens covered by Chapter 30.

Exceptions:

1. Routine maintenance.
2. For repair work performed on an emergency basis, application for permit shall be made within two working days of commencement of work.

[A] 105.7.12 LP-gas. An ((~~construction~~)) installation permit is required for installation of or modification to an LP-gas system. Maintenance performed in accordance with this code is not considered to be a modification and does not require a permit.

[A] 105.7.13 Private fire hydrants. An ((~~construction~~)) installation permit is required for the installation or modification of private fire hydrants. Maintenance performed in accordance with this code is not considered to be a modification and does not require a permit.

[A] 105.7.14 Smoke control or smoke exhaust systems. Construction permits issued by the Seattle Department of Construction and Inspections are required for installation of or alteration to smoke control or smoke exhaust systems. Maintenance performed in accordance with this code is not considered to be an alteration and does not require a permit.

[A] 105.7.15 Solar photovoltaic power systems. A construction permit issued by the Seattle Department of Construction and Inspections is required to install or modify solar photovoltaic power systems. Maintenance performed in accordance with this code is not considered to be a modification and does not require a permit.

[A] 105.7.16 Spraying or dipping. An ((~~construction~~)) installation permit is required to install or modify a spray room, dip tank or booth. Maintenance performed in accordance with this code is not considered to be an alteration and does not require a permit.

[A] 105.7.17 Standpipe systems. A construction permit issued by the Seattle Department of Construction and Inspections is required for the installation, modification or removal from service of a standpipe system. Maintenance performed in accordance with this code is not considered a modification and does not require a permit.

[A] 105.7.18 Temporary membrane structures and tents. An ((~~construction~~)) installation permit is required to erect a((~~n air-supported~~)) temporary membrane structure, a temporary stage canopy or a tent having an area in excess of 400 square feet (37 m^2) if all of the conditions are met:

1. The membrane structure or tent will be erected for a time period not to exceed four weeks,
2. The membrane structure or tent will be located at least 200 feet from shorelines,
3. No stage, platform, bleacher or similar structure greater than 4 feet in height will be installed inside the membrane structure or tent,

4. The membrane structure or tent will not be attached to a building or other permanent structure for support, and
5. The installation permit does not propose foul weather use, or a structure of unusual shape, unusual location or large area or height.

Exceptions:

1. Tents used exclusively for recreational camping purposes.
2. Funeral tents and curtains, or extensions attached thereto, when used for funeral services.
3. Tents and awnings open on all sides, which comply with all of the following:

3.1. Individual tents shall have a maximum size of 700 square feet (65 m^2).

3.2. The aggregate area of multiple tents placed side by side without a fire break clearance of not less than 12 feet (3658 mm) shall not exceed 700 square feet (65 m^2) total.

3.3. A minimum clearance of 12 feet (3658 mm) to structures and other tents shall be maintained.

105.7.18 Point of Information

If any one of the above-noted conditions (items 1-5) is not met, a permit for the membrane structure or tent may be required from the Department of Construction and Inspections.

* * *

SECTION 106

INSPECTIONS

* * *

106.5 Special inspections. The *fire code official* is authorized to appoint qualified persons or agencies having special technical skills as special inspectors or plan reviewers and accept their inspection, plan review and evaluation of specialized fire protection equipment or systems.

106.5.1 Other inspections. The *fire code official* is authorized to accept inspections performed by other jurisdictions and agencies and honor permits and certificates issued by other jurisdictions for activities regulated by this code, upon presentation to the *fire code official* of satisfactory evidence that such inspections, permits and certificates are substantially in accord with the fire safety requirements of this code.

SECTION 107

MAINTENANCE

* * *

[A] 107.3 Recordkeeping. A record of periodic inspections, tests, servicing and other operations and maintenance shall be maintained on the premises or other approved location for not less than 3 years, or a different period of time where specified in this code or referenced standards. In accordance with applicable law ((~~R~~)) records shall be made available for inspection by the fire code official, and a copy of the records shall be provided to the fire code official upon request.

The *fire code official* is authorized to prescribe the form and format of such recordkeeping. The *fire code official* is authorized to require that certain required records be filed with the *fire code official*.

* * *

[A] 107.4 Rendering equipment inoperable. Portable or fixed fire-extinguishing systems or devices and fire-warning systems shall not be rendered inoperative or inaccessible except as necessary during emergencies, maintenance, repairs, *alterations*, drills or prescribed testing.

Exception: When approved by the *fire code official.*

* * *

[A] 107.5 Overcrowding. Overcrowding or admittance of any *person* beyond the *approved* capacity of a building or a portion thereof ((~~shall not be allowed~~)) is prohibited. The *fire code official*, upon finding any overcrowding conditions or obstructions in *aisles*, passageways or other *means of egress*, or upon finding any condition which constitutes a life safety hazard, ((~~shall be~~)) is authorized to direct actions be taken to reduce the overcrowding or to cause the event to be stopped until such condition or obstruction is corrected.

SECTION 108

((~~BOARD OF~~))APPEALS

108 Point of Information

For information on appeals procedures, see Seattle Fire Department Information Bulletin, *Requesting a Review by the Seattle Fire Code Appeals Board* at http://www.seattle.gov/fire/FMO/firecode/cam/5972CAM%20FireCodeAppeals.pdf

[A] 108.1 Appeals. Appeals from decisions or actions pertaining to the application and interpretation of this Code shall first be addressed to the *fire code official*. If not resolved with the *fire code official*, the appellant may submit a written request to the *fire code official* for a review by the Fire Code Appeals Board in accordance with all applicable by-laws, rules, regulations and ordinances. The result of this review is advisory only, in accordance with City of Seattle Ordinance 119799. Following receipt of the Fire Code Appeals Board recommendation the fire chief, who shall not have acted as the *fire code official* in the first appeal of the application or interpretation of the code, shall issue a final written decision. ((~~**Board of appeals established.** In order to hear and decide appeals of orders, decisions or determinations made by the *fire code official* relative to the application and interpretation of this code, there shall be and is hereby created a board of appeals. The board of appeals shall be appointed by the governing~~

~~body and shall hold office at its pleasure. The *fire code official* shall be an ex officio member of said board but shall have no vote on any matter before the board. The board shall adopt rules of procedure for conducting its business, and shall render all decisions and findings in writing to the appellant with a duplicate copy to the *fire code official*.~~))

((~~[A] **108.2 Limitations on authority.** An application for appeal shall be based on a claim that the intent of this code or the rules legally adopted hereunder have been incorrectly interpreted, the provisions of this code do not fully apply, or an equivalent method of protection or safety is proposed. The board shall have no authority to waive requirements of this code.~~))

((~~[A] **108.3 Qualifications.** The board of appeals shall consist of members who are qualified by experience and training to pass on matters pertaining to hazards of fire, explosions, hazardous conditions or *fire protection systems* and are not employees of the jurisdiction.~~))

SECTION 109

VIOLATIONS

[A] 109.1 Unlawful acts. It shall be unlawful for a *person*, firm or Corporation to erect, construct, alter, repair, remove, demolish or utilize a building, occupancy, premises or system regulated by this code, or cause same to be done, in conflict with or in violation of any of the provisions of this code. <u>It is a violation of the *Seattle Fire Code* for any person to fail to comply with the *Seattle Fire Code* or with any order issued by the *fire code official*.</u>

[A] 109.2 Owner/occupant responsibility. Correction and abatement of violations of this code shall be the responsibility of the *owner*. If an occupant creates, or allows to be created, hazardous conditions in violation of this code, the occupant shall be held responsible for the abatement of such hazardous conditions.

[A] 109.3 Notice of violation. When the *fire code official* finds a building, premises, vehicle, *vessel*, storage facility or outdoor area that is in violation of this code, the *fire code official* is authorized to ((~~prepare~~)) issue a written notice of violation describing the ((~~conditions deemed unsafe~~)) violation and, when immediate compliance is not ((~~immediate~~)) required, specifying a time for ((~~reinspection~~)) achieving compliance. Nothing in this subsection shall be deemed to limit or preclude any other enforcement action or proceeding, and nothing in this section shall be deemed to obligate or require the *fire code official* to issue a notice of violation prior to the imposition of civil or criminal penalties or remedies.

[A] 109.3.1 Service. A notice of violation issued pursuant to this code shall be served upon the *owner*, operator, occupant or other person responsible for the condition or violation, either by personal service, mail or by delivering the same to, and leaving it with, some person of responsibility upon the premises. For unattended or abandoned locations, a copy of such notice of violation shall be posted on the premises in a conspicuous place at or near the entrance to such premises and the notice of violation ((~~shall~~)) may be mailed by certified mail with return receipt requested or a certificate of mailing, to the last known address of the *owner*, occupant or both.

[A] 109.3.2 Compliance with orders and notices. A notice of violation issued or served as provided by this code shall be complied with by the *owner*, operator, occupant or other person responsible for the condition or violation to which the notice of violation pertains.

[A] 109.3.3 Prosecution of violations. If the notice of violation is not complied with promptly or by the time specified in the notice, the *fire code official* is authorized to request the legal counsel of the jurisdiction to institute the appropriate legal proceedings at law or in equity to restrain, correct or abate such violation,((~~or~~)) to require removal or termination of the unlawful

occupancy of the structure in violation of the provisions of this code or of the order or notice ((~~direction made pursuant hereto~~)), or to collect a penalty for violation.

[A] 109.3.4 Unauthorized tampering. Signs, tags or seals posted or affixed by the *fire code official* shall not be mutilated, destroyed or tampered with or removed without authorization from the *fire code official*.

[A] 109.4 ((~~Violation p~~)) Penalties. Penalties shall be in accordance with this section.

109.4.1 Alternative civil penalties. ((~~*Persons*~~)) Any person who shall violate a provision of this code or shall fail to comply with any of the requirements thereof or who shall erect, install, alter, repair or do work in violation of the *approved construction documents* or directive of the *fire code official*, or of a permit or certificate used under provisions of this code, shall be ((~~guilty of a [SPECIFY OFFENSE], punishable by a fine of not more than [AMOUNT] dollars or by imprisonment to exceeding [NUMBER OF DAYS], or both such fine and imprisonment. Each day that a violation continues after due notice has been served shall be deemed a separate offense.~~)) subject to a cumulative civil penalty in an amount not to exceed $1,000 per day for each violation from the time the violation occurs or begins until compliance is achieved. The penalty shall be collected by civil action brought in the name of the City. The *fire code official* shall notify the City Attorney in writing of the name of any person, firm or corporation subject to the penalty, and the City Attorney shall, with the assistance of the *fire code official*, take appropriate action to collect the penalty. In any civil action for a penalty, the city has the burden of proving by a preponderance of the evidence that a violation exists or existed.

109.4.2 Alternative criminal penalty. Any person who shall violate a provision of this code or shall fail to comply with any of the requirements thereof or who shall erect, install, alter, repair or do work in violation of the *approved construction documents* or directive of the *fire code*

official, or of a permit or certificate used under provisions of this code, shall be guilty of a gross misdemeanor subject to the provisions of *Seattle Municipal Code* Chapters 12A.02 and 12A.04, except that absolute liability shall be imposed for such a violation or failure to comply and none of the mental states described in Section 12A.04.030 need be proved. The *fire code official* may request the City Attorney prosecute such violations criminally as an alternative to the civil penalties provision. Each day that a violation continues shall be deemed a separate offense.

[A]109.((~~4.1~~))4.3 Abatement of violation. In addition to the imposition of ((~~the~~)) civil and criminal penalties ((~~herein described~~)), the *fire code official* is authorized to institute appropriate action to prevent unlawful construction; ((~~or~~)) to restrain, correct or abate a violation; ((~~or~~)) to prevent illegal occupancy of a structure or premises; or to stop an illegal act, conduct of business or occupancy of a structure on or about any premises.

SECTION 110

UNSAFE BUILDINGS, PREMISES, VEHICLES, AND VESSELS

[A] 110.1 General. If ((~~during the inspection of~~)) a premises, a building or structure or any building system, vehicle or *vessel*, in whole or in part, ((~~constitutes a clear and inimical threat to human life, safety or health,~~)) endangers any property or the health or safety of the occupants of the property or of neighboring premises, buildings, motor vehicles, *vessels*, or the health and safety of the public or fire department personnel the *fire code official* shall issue such notice or orders to remove or remedy the conditions as shall be deemed necessary in accordance with this section. ((~~and shall~~)) The *fire code* official may refer the building to the ((~~building department~~)) Seattle Department of Construction and Inspections for any repairs, *alterations*, remodeling, removing or demolition required.

[A] 110.1.1 Unsafe conditions. Structures, premises, or existing equipment that are or hereafter become unsafe or deficient because of inadequate *means of egress,* ((~~or which~~)) that constitute a fire hazard, ((~~or are otherwise dangerous to human life or the public welfare, or which~~)) that involve illegal or improper occupancy or inadequate maintenance, or that are otherwise dangerous to human life or public welfare, shall be deemed an unsafe condition. A vacant structure which is not secured against unauthorized entry as required by Section 311 shall be deemed unsafe.

[A] 110.1.2 Structural hazards. When an apparent structural hazard is caused by the faulty installation, operation or malfunction of any of the items or devices governed by this code, the *fire code official* ((~~shall~~)) is authorized to immediately notify the building code official in accordance with Section 110.1.

[A] 110.2 Evacuation. The *fire code official* or the fire department official in charge of an incident shall be authorized to order the immediate evacuation of any occupied premises, building, vehicle, or *vessel* deemed unsafe when such premises, building, vehicle, or *vessel* has hazardous conditions that present imminent danger to premises, building, vehicle, or *vessel* occupants. *Persons* so notified shall immediately leave the structure or premises, vehicle, or *vessel* and shall not enter or re-enter until authorized to do so by the *fire code official* or the fire department official in charge of the incident.

[A] 110.3 Summary abatement. Where conditions exist that are deemed hazardous to life and property, the *fire code official* or fire department official in charge of the incident is authorized to abate summarily such hazardous conditions that are in violation of this code.

[A] 110.4 Abatement. The *owner*, operator or occupant of a building or premises deemed unsafe by the *fire code official* shall abate or cause to be abated or corrected such unsafe conditions either by repair, rehabilitation, demolition or other *approved* corrective action.

110.5 Notification. The *fire code official* shall serve the responsible party with a copy of violations, correction letters, and orders issued.

SECTION 111

STOP WORK OR USE ORDER

[A] 111.1 Order. Whenever the *fire code official* finds any work or use regulated by this code being performed in a manner contrary to the provisions of this code or in a dangerous or unsafe manner, the *fire code official* is authorized to issue a stop work or use order.

[A] 111.2 Issuance. A stop work or use order shall be in writing and shall be given to the *owner* of the property, or to the *owner's* agent, or to the *person* doing the work or use. Upon issuance of a stop work or use order, the cited work or use shall immediately cease. The stop work or use order shall state the reason for the order, and the conditions under which the cited work or use is authorized to resume.

[A] 111.3 Emergencies. Where an emergency exists, the *fire code official* shall not be required to give a written notice prior to stopping the work or use.

[A] 111.4 Failure to comply. It is a violation of this code for ((~~A~~)) any *person*((~~who shall~~)) to continue any work or use after having been served with a stop work or use order, except such work or use as that *person* is directed to perform to remove a violation or unsafe condition.

((~~, shall be liable to a fine of not less than [AMOUNT] dollars or more than [AMOUNT] dollars.~~))

* * *

SECTION 113

FEES

[A] 113.1 Fees. A permit shall not be issued until the fees have been paid, nor shall an amendment to a permit be released until the additional fee, if any, has been paid.

Exception: Those permits for which the *fire code official*, pursuant to the fee ordinance, authorizes invoices to be sent for the fees after the permits are issued.

[A] 113.2 Schedule of permit fees. A fee for each permit shall be paid as required, in accordance with the schedule ((~~as~~)) established by the ((~~applicable~~)) governing authority.

((**[A]** ~~**113.3 Work commencing before permit issuance.** Any *person* who commences any work, activity or operation regulated by this code before obtaining the necessary permits shall be subject to an additional fee established by the applicable governing authority, which shall be in addition to the required permit fees.~~))

[A] 113.((4))3 Related fees. The payment of the fee for the construction, *alteration*, removal or demolition of work done in connection ((~~to~~)) or concurrently with the work or activity authorized by a permit ((~~shall~~)) does not relieve the applicant or holder of the permit from the payment of other fees that are prescribed by law.

113.((5))4 Refunds. The applicable governing authority is authorized to establish a refund policy.

* * *

Section 4. Chapter 2 of the 2015 International Fire Code is amended as follows:

CHAPTER 2

DEFINITIONS

* * *

SECTION 201

GENERAL

201.5 Metric and English units.

Wherever in this ordinance there is a conflict between metric units of measurements and English units, the English units govern.

SECTION 202

GENERAL DEFINITIONS

* * *

ADDITION. An extension or increase in floor area, number of stories, or height of a building or structure.

* * *

[W] ADULT FAMILY HOME. A dwelling in which a person or persons provide personal care, special care, room and board to more than one but not more than six adults who are not related by blood or marriage to the person or persons providing the services.

* * *

[W] ALERT SIGNAL. A distinctive signal indicating the need for trained personnel and occupants to initiate a specific action, such as shelter-in-place.

[W] ALERT SYSTEM. Approved devices, equipment, and systems or combinations of systems used to transmit or broadcast an alert signal.

* * *

[B] AWNING. ((~~An architectural projection that provides weather protection, identity or decoration and is partially or wholly supported by the building to which it is attached. An awning~~

~~is comprised of a lightweight frame structure over which a covering is attached.~~)) A protective covering with a nonrigid surface projecting from a building.

* * *

BERTH. The water space to be occupied by a boat or other vessel alongside or between bulkheads, piers, piles, fixed and floating docks, or any similar access structure.

* * *

BOAT. Any device in which a person may be transported upon water and includes every motorboat, sailboat, pontoon boat, rowboat, skiff, dinghy, or canoe, regardless of size.

BOATHOUSE An independently floating structure designed to be moored to a main float system to enclose and protect a vessel or vessels. A boathouse is capable of being moved on water, but is typically moored to a float system for long periods of time.

BOATYARD. A facility used for constructing, repairing, servicing, hauling from the water, storing (on land and in water), and launching of boats. Boatyards are usually, but not necessarily, waterfront facilities. Boatyards provide facilities and services, as described in the definition, that exceed the basic berthing or mooring of boats.

* * *

BONFIRE. An outdoor fire utilized for ceremonial or recreational purposes and exceeding the size of a recreational fire.

* * *

[A] BUILDING OFFICIAL. The ((~~officer or other designated authority charged with the administration and enforcement of this code~~)) Director of the Seattle Department of Construction and Inspections, or a duly authorized representative.

* * *

CANOPY. ((~~A structure or architectural projection of rigid construction over which a covering is attached that provides weather protection, identity or decoration, and may be structurally independent or supported by attachment to a building on one end and by not less than one stanchion on the outer end.~~)) A protective covering with a rigid surface projecting from a building. Marquees are a type of canopy.

* * *

[A] CHANGE OF OCCUPANCY. ((~~A change in the use of a building or a portion of a building. A change of occupancy shall include any change of occupancy classification, any change from one group to another group within an occupancy classification or any change in use within a group for a specific occupancy classification.~~)) A change in the purpose or level of activity within a building that involves a change in application of the requirements of this code.

* * *

[W] CHILD DAY CARE. The care of children during any period of a 24-hour day.

[W] CHILD DAY CARE HOME, FAMILY. A child day care facility, licensed by the state, located in the dwelling of the person or persons under whose direct care and supervision the child is placed, for the care of 12 or fewer children, including children who reside at the home.

* * *

[W] CLUSTER. Clusters are multiple portable school classrooms separated by less than the requirements of the building code for separate buildings.

* * *

CONTAINER FREIGHT STATION. A transload facility used primarily for loading and unloading cargo from containers.

* * *

COVERED BOAT MOORAGE. A pier or system of floating or fixed accessways to which vessels on water may be secured and any portion of which are covered by a roof.

* * *

DESIGNATED HOT WORK FACILITY. Those piers, designated by the fire code official, and by virtue of their construction, location, fire protection, emergency vehicle access and fire hydrant availability, that are suitable to permit certain repairs to vessels.

* * *

[W] EMERGENCY ((~~EVACUATION~~)) DRILL. An exercise performed to train staff and occupants and to evaluate their efficiency and effectiveness in carrying out emergency ((~~evacuation~~)) procedures.

EMERGENCY POWER SYSTEM. An electrical system that complies with *Seattle Electrical Code* Article 700.

* * *

EXISTING BUILDING, EXISTING STRUCTURE. A building or structure erected prior to the date of adoption of this code, or one for which a valid Certificate of Occupancy has been issued, or one that has passed a final inspection.

* * *

[B] EXIT PASSAGEWAY. An exit component that ((~~is separated from other interior spaces of a building or structure by fire-resistance-rated construction and opening protectives, and~~)) provides for a protected path of egress travel in a horizontal direction to an *exit* or the *exit discharge.*

* * *

FIRE DEPARTMENT MASTER KEY. A limited issue key of special or controlled design to be carried by fire department officials in command which will open key boxes on specified properties.

202 Point of Information

The *fire code official* has approved the "KnoxBox" as the access key box for use in The City of Seattle.

* * *

FIRE DETECTION SYSTEM. A system of smoke or heat detectors monitored at an approved central station, with no requirement for notification appliances in the building.

* * *

FIRE DISTRICT. That part of the city within the boundary described as follows:

Beginning at the intersection of the center line of Alaskan Way and Clay Street; thence northeasterly along the center line of Clay Street to an intersection with the center line of Denny Way; thence easterly along the center line of Denny Way to an intersection with the center line of Yale Avenue; thence southeasterly along the center line of Yale Avenue to an intersection with the center line of Interstate Highway 5; thence southerly and southeasterly along the center line of Interstate 5 to an intersection with the center line of 7th Avenue South; thence southerly along the center line of 7th Avenue South to an intersection with the center line of Dearborn Street; thence westerly along the center line of Dearborn Street to an intersection with the center line of Airport Way; thence northwesterly along the center line of Airport Way to an intersection with the center line of 4th Avenue South; thence southerly along the center line of 4th Avenue south to an intersection with the center line of South Royal Brougham Way; thence westerly along said center line of South Royal Brougham Way to an intersection with the center line of South

Alaskan Way; thence southerly along the center line of South Alaskan Way to an intersection with the center line of South Massachusetts Street; thence westerly along the centerline of South Massachusetts Street to the Outer Harbor Line in Elliott Bay; thence northerly and northwesterly along said Outer Harbor Line to an intersection with the center line of West Harrison Street; thence easterly along the center line of West Harrison Street to an intersection with the center line of Alaskan Way; then southeasterly along the center line of Alaskan Way to the point of beginning.

Buildings and structures located partially within and partially outside the Fire District are considered to be located in the Fire District.

Point of Information

For a map of the City of Seattle *Fire District*, see the *Seattle Building Code*.

* * *

FIRE HAZARD. Any situation, process, material, or condition that, on the basis of applicable data, can cause a fire or explosion or that can provide a ready fuel supply to augment the spread or intensity of a fire or explosion, all of which pose a threat to life or property.

* * *

[B] FIRE SEPARATION DISTANCE. The distance measured from the building face to one of the following:

1. The closest interior lot line;
2. To the ((~~centerline~~)) opposite side of a street, an alley or public way; or
3. To an imaginary line between two buildings on the property.

The distance shall be measured at right angles from the face of the wall.

* * *

[B] FIRE WALL. A fire-resistance-rated wall having protected openings, which restricts the spread of fire and extends continuously from the foundation to or through the roof. ((, ~~with sufficient structural stability under fire conditions to allow collapse of construction on either side without collapse of the wall~~)).

* * *

FLAME EFFECT. The combustion of solids, liquids, or gases to produce thermal, physical, visual, or audible phenoma before an audience.

* * *

GRADE PLANE. A reference plane representing the average of finished ground level adjoining the building at *exterior walls*. Where the finished ground level slopes away from the *exterior walls*, the reference plane shall be established by the lowest points within the area between the building and the *lot line* or, where the *lot line* is more than 6 feet (1829 mm) from the building, between the building and a point 6 feet (1829 mm) from the building. For grade of structures built over water, see Seattle Building Code Section 427.3.

* * *

[W] GRAVITY-OPERATED DROP OUT VENTS. Automatic smoke and heat vents containing heat-sensitive glazing designed to shrink and drop out of vent openings when exposed to fire.

* * *

HEIGHT, BUILDING. The vertical distance from *grade plane* to the average height of the highest roof surface other than rooftop structures complying with Seattle Building Code Section 1509.

* * *

HELIPAD. A structural surface that is used for the landing, taking off, taxiing and parking of helicopters.

* * *

[B] HISTORIC BUILDINGS. ((~~Buildings that are listed in or eligible for listing in the National Register of Historic Places, or designated as historic under an appropriate state or local law.~~)) See "Landmark".

* * *

[W] HOSPICE CARE CENTERS. A building or portion thereof used on a 24-hour basis for the provision of hospice services to terminally ill inpatients.

* * *

HOT WORK. Operations ((~~including~~)) involving cutting, welding, burning, ((~~Thermit welding, brazing, soldering, grinding, thermal spraying, thawing pipe, installation of torch-applied roof systems~~)) or ((~~any other~~)) similar ((~~activity~~)) operation that is capable of initiating fires or explosions.

* * *

IMMINENT HAZARD. An act or condition that is judged to present a danger to persons or property that is so urgent and severe that it requires immediate corrective or preventive action.

* * *

LANDMARK. A building or structure that is subject to a requirement to obtain a certificate of approval from the City Landmarks Preservation Board before altering or making significant changes to specific features or characteristics, that has been nominated for designation and the City Landmarks Preservation Board has not issued a determination regarding designation, that

has been designated for preservation by the City Landmarks Preservation Board, that has been designated for preservation by the State of Washington, that has been listed or determined eligible to be listed in the National Register of Historic Places, or that is located in a landmark or special review district subject to a requirement to obtain a certificate of approval before making a change to the external appearance of a structure.

* * *

MARINA. ((~~Any portion of the ocean or inland water, either naturally or artificially protected, for the mooring, servicing or safety of vessels and shall include artificially protected works, the public or private lands ashore, and structures or facilities provided within the enclosed body of water and ashore for the mooring or servicing of vessels or the servicing of their crews or passengers.~~)) A facility, generally on the waterfront, that stores and services boats in berths, on moorings, and in dry storage or dry stack storage. The services provided by a marina are those generally associated with active boat use, such as berthing of boats, fueling, sanitary sewage pumpout, seasonal boat storage or short-term storage, seasonal boat painting, boat engine maintenance, and voyage repairs. Servicing of a greater nature is generally associated with boatyard facilities. A marina can also incorporate recreational facilities, ship's stores, offices, restaurants, or other upland amenities.

* * *

MARINE TERMINAL. A facility comprised of one or more berths, piers, wharves, loading and unloading areas, warehouses, and storage yards and used for transfer of people and/or cargo between waterborne and land transportation modes.

* * *

MISCELLANEOUS TIRE STORAGE. The storage of rubber tires that is incidental to the main use of the building.

* * *

((~~MATERIAL~~)) SAFETY DATA SHEET ((~~(MSDS)~~)) (SDS). Information concerning a hazardous material which is prepared in accordance with the provisions of DOL 29 CFR Part 1910.1200 or in accordance with the provisions of a federally approved state OSHA plan.

* * *

[W] NIGHTCLUB. An A-2 Occupancy use under the 2006 International Building Code in which the aggregate area of concentrated use of unfixed chairs and standing space that is specifically designated and primarily used for dancing or viewing performers exceeds three hundred fifty square feet, excluding adjacent lobby areas. "Nightclub" does not include theaters with fixed seating, banquet halls, or lodge halls.

* * *

NON-PRODUCTION LABORATORY FACILITY. A facility where the containers used for reactions, transfers, and other handling of chemicals are designed to be easily and safely manipulated by one person. It is a workplace where chemicals are used or synthesized on a nonproduction basis.

* * *

OCCUPANCY CLASSIFICATION. For the purposes of this code, certain occupancies are defined as follows:

* * *

[W] **GROUP E, DAY CARE FACILITIES.** This group includes buildings and structures or portions thereof occupied by more than five children older than 2 ½ years of age who receive educational, supervision or personal care services for less than 24 hours per day.

Within places of worship. Rooms and spaces within places of worship providing such care during religious functions shall be classified as part of the primary occupancy.

Five or fewer children. A facility having five or fewer children receiving such care shall be classified as part of the primary occupancy.

Family child day care homes. Family child day care homes licensed by Washington State for the care of twelve or fewer children shall be classified as Group R-3.

((~~**Five or fewer children in a dwelling unit.** A facility such as the above within a *dwelling unit* and having five or fewer children receiving such care shall be classified as a Group R-3 occupancy or shall comply with the *International Residential Code*.~~))

* * *

[W] **INSTITUTIONAL GROUP I-1.** This occupancy shall include buildings, structures or parts thereof for more than 16 persons ((~~who reside on a 24-hour basis, in a supervised environment and receive custodial care. The persons receiving care are capable of self preservation.~~)) , on a 24-hour basis, who because of age, mental disability or other reasons, live in a supervised residential environment that provides *personal care services*. The occupants are capable of responding to an emergency situation without physical assistance from staff. This group shall include, but not be limited to, the following:

Alcohol and drug centers

Assisted living facilities

Congregate care facilities

Convalescent facilities

Group homes

Half-way houses

Residential board and care facilities

Social rehabilitation facilities

State licensed care facilities. A facility such as the above providing licensed care to clients in one of the categories listed in the Seattle Building Code Section 310.1 licensed by Washington State shall be classified as Group R-2.

Five or fewer persons receiving care. A facility such as the above with five or fewer persons receiving such care and adult family homes licensed by Washington State shall be classified as Group R-3 or shall comply with the *International Residential Code.*((~~provided an *automatic sprinkler system* is installed in accordance with Section 903.3.1.3 or *International Residential Code* Section P2904.~~))

((~~**Six to sixteen persons receiving care.** A facility such as above, housing at least six and not more than 16 persons receiving such care, shall be classified as Group R-4.~~))

[W][B] INSTITUTIONAL GROUP I-2. This occupancy shall include buildings and structures used for medical, surgical, psychiatric, nursing, or custodial care for ((~~care on a 24-hour basis for more than five~~)) persons who are not capable of self-preservation. This group shall include, but not be limited to, the following:

((~~Foster~~)) Child care facilities

Detoxification facilities

Hospice care centers

Hospitals

Mental hospitals

Nursing homes

((~~Psychiatric hospitals~~))

State licensed care facilities. A facility providing licensed care to clients in one of the categories listed in *Seattle Building Code* Section 310.1 licensed by Washington State shall be classified as Group R-2.

((~~**Five or fewer persons receiving care.** A facility such as the above with five or fewer persons receiving such care shall be classified as Group R-3 or shall comply with the *International Residential Code* provided an *automatic sprinkler system* is installed in accordance with Section 903.3.1.3 or Section P2904 of the *International Residential Code*.~~))

* * *

[W] INSTITUTIONAL GROUP I-4, DAY CARE FACILITIES. This group shall include buildings and structures occupied by ((~~more than five~~)) persons of any age who receive custodial care for less than 24 hours by ((~~persons~~)) individuals other than parents or guardians, relatives by blood, marriage, or adoption, and in a place other than the home of the person cared for. ((~~This group shall include, but not be limited to, the following:~~

~~Adult day care~~

~~Child day care~~))

Adult care facility. A facility that provides accommodations for less than 24 hours for more than five unrelated adults and provides supervision and *personal care services* shall be classified as Group I-4.

Exception: Where the occupants are capable of responding to an emergency situation without physical assistance from the staff, the facility shall be classified as Group R-3.

((~~**Classification as Group E.** A child day care facility that provides care for more than five but no more than 100 children 2 ½ years or less of age, where the rooms in which the children are cared for are located on a *level of exit discharge* serving such rooms and each of these child care rooms has an *exit* door directly to the exterior, shall be classified as Group E.~~))

Within a place of religious worship. Rooms and spaces within places of religious worship providing such care during religious functions shall be classified as part of the primary occupancy.

[W] ((~~**Five or fewer occupants receiving care.** A facility having five or fewer persons receiving custodial care shall be classified as part of the primary occupancy.~~))

[W] Child care facility. Child care facilities that provide supervision and personal care on a less than 24-hour basis for more than five children 2 1/2 years of age or less shall be classified as Group I-4.

Exceptions:

1. A child day care facility that provides care for more than five but no more than 100 children 2 1/2 years or less of age, where the rooms in which the children are cared for are located on a *level of exit discharge* serving such rooms and each of these child care rooms has an *exit* door directly to the exterior, shall be classified as Group E.
2. Family child day care homes licensed by Washington state for the care of 12 or fewer children shall be classified as Group R-3.

Five or fewer occupants receiving care in a *dwelling unit*. A facility such as the above within a *dwelling unit* and having five or fewer persons receiving custodial care shall be classified as a Group R-3 occupancy or shall comply with the *International Residential Code* in accordance with Section 101.2 of the *International Building Code*.

* * *

RESIDENTIAL GROUP R. Residential Group R includes, among others, the use of a building or structure, or a portion thereof, for sleeping purposes when not classified as an Institutional Group I or when not regulated by the *International Residential Code* in accordance with Section 101.2 of the *International Building Code*. Residential occupancies shall include the following:

[W] RESIDENTIAL GROUP R-1. Residential occupancies containing sleeping units where the occupants are primarily transient in nature, including:

Boarding houses (transient) ((~~with more than 10 occupants~~))

Congregate living facilities (transient) with more than 10 occupants

Hotels (transient)

Motels (transient)

Congregate living facilities (transient) with 10 or fewer occupants are permitted to comply with the construction requirements for Group R-3.

[W] RESIDENTIAL GROUP R-2. Residential occupancies containing *sleeping units* or more than two *dwelling units* where the occupants are primarily permanent in nature, including:

Apartment houses

Boarding homes licensed by Washington state under Chapter 388-78A WAC

Boarding houses (nontransient) ((~~with more than 16 occupants~~))

Congregate living facilities (nontransient) with more than 16 occupants

Convents

Dormitories

Fraternities and sororities

Hotels (nontransient)

Live/work units

Monasteries

Motels (nontransient)

Residential treatment facilities as licensed by Washington state under Chapter 246-337 WAC

Vacation timeshare properties

[W] **RESIDENTIAL GROUP R-3** Residential occupancies where the occupants are primarily permanent in nature and not classified as Group R-1, R-2, ((~~R-4~~)) or I, including:

Adult care facilities that provide accommodations for five or fewer persons of any age for less than 24 hours.

((~~Boarding houses (nontransient) with 16 or fewer occupants~~

~~Boarding houses (transient) with 10 or fewer occupants~~

~~Buildings that do not contain more than two dwelling units~~))

((~~Care~~)) Child care facilities that provide accommodations for five or fewer persons of any age for less than 24 hours

Congregate living facilities (nontransient) with 16 or fewer occupants

Congregate living facilities (transient) with ((~~10~~)) 16 or fewer occupants.

[W] Adult family homes, family child day care homes. Adult care within a single-family home, adult family homes and family child day care homes are permitted to comply with the *International Residential Code.*

[W] Foster family care homes. Foster family care homes licensed by Washington State are permitted to comply with the *International Residential Code*, as an accessory use to a dwelling, for six or fewer children including those of the resident family.

((~~**Care facilities within a dwelling.** Care facilities for five or fewer persons receiving care that are within a single-family dwelling are permitted to comply with the *International Residential Code* provided an *automatic sprinkler system* is installed in accordance with Section 903.3.1.3 or Section P2904 of the *International Residential Code*.~~))

[W] ((~~**RESIDENTIAL GROUP R-4** Residential occupancies shall include buildings arranged for occupancy as residential care/assisted living facilities including more than five but not more than 16 occupants, excluding staff. Group R-4 occupancies shall meet the requirements for construction as defined for Group R-3, except as otherwise provided for in this code or shall comply with the *International Residential Code,* provided the building is protected by an *automatic sprinkler system* installed in accordance with Section 903.2.8.~~

~~Alcohol and drug centers~~

~~Assisted living facilities~~

~~Congregate care facilities~~

~~Convalescent facilities~~

~~*Group homes*~~

~~Halfway houses~~

~~Residential board and *custodial care* facilities~~

~~Social rehabilitation facilities~~

~~Group R-4 occupancies shall meet the requirements for construction as defined for Group R-3, except as otherwise provided for in this code.~~))

[B] Storage Group S. Storage Group S occupancy includes, among others, the use of a building or structure, or a portion thereof, for storage that is not classified as a hazardous occupancy.

Moderate-hazard storage, Group S-1. Buildings occupied for storage uses that are not classified as Group S-2, including, but not limited to, storage of the following:

Aerosols, Levels 2 and 3

Aircraft hangar (storage and repair)

Bags: cloth, burlap and paper

Bamboos and rattan

Baskets

Belting: canvas and leather

Books and paper in rolls or packs

Boots and shoes

Buttons, including cloth covered, pearl or bone

Cardboard and cardboard boxes

Clothing, woolen wearing apparel

Cordage

Dry boat storage (indoor)

Furniture

Furs

Glues, mucilage, pastes and size

Grains

Horns and combs, other than celluloid

Leather

Linoleum

Lumber

Motor vehicle and marine repair garages complying with the maximum allowable quantities of hazardous materials *listed* in Table 2703.1.1(1) (see Section 406.6 of the *International Building Code*)

Photo engravings

Resilient flooring

Silks

Soaps

Sugar

Tires, bulk storage of

Tobacco, cigars, cigarettes and snuff

Upholstery and mattresses

Wax candles

Low-hazard storage, Group S-2. Includes, among others, buildings used for the storage of noncombustible materials such as products on wood pallets or in paper cartons with or without single thickness divisions; or in paper wrappings. Such products are permitted to have a negligible amount of plastic trim, such as knobs, handles or film wrapping. Storage uses shall include, but not be limited to, storage of the following:

Asbestos

Beverages up to and including 16-percent alcohol in metal, glass or ceramic containers

Cement in bags

Chalk and crayons

Covered boat moorage not classified as Group U

Dairy products in nonwaxed coated paper containers

Dry cell batteries

Electrical coils

Electrical motors

Empty cans

Food products

Foods in noncombustible containers

Fresh fruits and vegetables in nonplastic trays or containers

Frozen foods

Glass

Glass bottles, empty or filled with noncombustible liquids

Gypsum board

Inert pigments

Ivory

Meats

Metal cabinets

Metal desks with plastic tops and trim

Metal parts

Metals

Mirrors

Oil-filled and other types of distribution transformers

Parking garages, open or enclosed

Porcelain and pottery

Stoves

Talc and soapstones

Washers and dryers

* * *

OUTDOOR ASSEMBLY EVENT. Private or public event conducted outdoors, including but not limited to beer gardens and mazes, having a projected attendance of 500 or more or confines 100 or more attendees by permanent or temporary installation of barricades or fencing.

Exception: Events held at Group R, Division 3 occupancies.

* * *

PIER. ((~~A structure built over the water, supported by pillars or piles, and used as a landing place, pleasure pavilion or similar purpose.~~)) A structure, usually of greater length than width, of timber, stone, concrete or other material, having a deck and projecting from the shore into waters so that boats may be moored alongside for loading, unloading, storage, repairs or commercial uses.

* * *

[W] PORTABLE SCHOOL CLASSROOM. A structure, transportable in one or more sections, which requires a chassis to be transported, and is designed to be used as an educational space with or without a permanent foundation. The structure shall be trailerable and capable of being demounted and relocated to other locations as needs arise.

* * *

[W] RECALL SIGNAL. An electrically or mechanically operated signal used to recall occupants after an emergency drill or to terminate a shelter-in-place event that shall be distinct from any alarm or alert signal used to initiate an emergency plan, or other signals.

* * *

REHABILITATION. Any work, as described by the categories of work defined herein, undertaken in an existing building.

REPAIR. The reconstruction or renewal of any part of an existing building for the purpose of its maintenance or to correct damage.

* * *

REPAIR GARAGE. ((~~A building, structure or portion thereof used for servicing or repairing motor vehicles.~~))

Major Repair Garage. A building or portions of a building where major repairs, such as engine overhauls, painting, body and fender work, and repairs that require draining of the motor vehicle fuel tank are performed on motor vehicles, including associated floor space used for offices, parking, or showrooms.

Minor Repair Garage. A building or portions of a building used for lubrication, inspection, and minor automotive maintenance work, such as engine tune-ups, replacement of parts, fluid changes (e.g., oil, antifreeze, transmission fluid, brake fluid, air conditioning refrigerants, etc.), brake system repairs, tire rotation, and similar routine maintenance work, including associated floor space used for offices, parking, or showrooms.

* * *

[W] SHELTER-IN-PLACE. An emergency response used to minimize exposure of facility occupants to chemical or environmental hazards by taking refuge in pre-determined interior rooms or areas where actions are taken to isolate the interior environment from the exterior hazard.

* * *

SHIPYARD. A pier, wharf or series of piers and wharves and related onshore facilities, designated by the *fire code official*, that by virtue of the pier construction, location, emergency vehicle access, fire protection, hydrant availability and onsite safety personnel in accordance with Seattle Fire Department Administrative Rule 26.02.09, *Designated Hot Work Facilities and Shipyards* and any future revisions of this rule adopted by the *fire code official*, is suitable to permit repairs, including major conversions, on marine vessels of any length.

* * *

SLIP. A berthing place between or adjacent to piers, wharves, or docks: the water areas associated with boat moorage.

* * *

STANDBY FIRE PERSONNEL. Uniformed employees of the Seattle Fire Department.

[B] STANDBY POWER SYSTEM, LEGALLY REQUIRED. An electrical power system that complies with *Seattle Electrical Code* Article 701, Legally Required Standby Systems.

* * *

[B] STORY ABOVE GRADE PLANE. Any story having its finished floor surface entirely above grade plane, or in which the finished surface of the next floor ((~~next~~)) above is:

171. More than 6 feet (1829 mm) above grade plane; or

182. More than 12 feet (3658 mm) above the finished ground level ((~~at any point~~)) for more than 25 feet (7620 mm) of the perimeter. Required driveways up to 22 feet (6706 mm) wide shall not be considered in calculating the 25 foot distance if there is at least 10 feet (3048 mm) between the driveway and all portions of the 25 foot area.

* * *

SUBSTANTIAL ALTERATION. See Section 303.1.1 of the Seattle Existing Building Code.

SUBSTRUCTURE. The portion of the construction below and including the deck immediately above the water.

SUPERSTRUCTURE. The portion of construction above the deck.

* * *

THERMIT WELDING. A welding method that employs molten metal to permanently join the conductors. The process employs an exothermic reaction of a thermite composition to heat the metal, and requires no external source of heat or current. The chemical reaction that produces the heat is an aluminothermic reaction between aluminum powder and a metal oxide.

* * *

Section 5. Chapter 3 of the 2015 International Fire Code is amended as follows:

CHAPTER 3

GENERAL REQUIREMENTS

* * *

302.1 Definitions. The following terms are defined in Chapter 2:

FIRE PERFORMANCE ART.

FLAME EFFECT.

* * *

OUTDOOR ASSEMBLY EVENT.

* * *

SECTION 303

ASPHALT KETTLES

303 Point of Information

See Section 3317 for asphalt kettle requirements

((**~~303.1 Transporting.~~** ~~Asphalt (tar) kettles shall not be transported over any highway, road or street when the heat source for the kettle is operating.~~

~~**Exception:** Asphalt (tar) kettles in the process of patching road surfaces.~~

~~**303.2 Location.** Asphalt (tar) kettles shall not be located within 20 feet (6096 mm) of any combustible material, combustible building surface or any building opening and within a controlled area identified by the use of traffic cones, barriers or other *approved* means. Asphalt (tar) kettles and pots shall not be utilized inside or on the roof of a building or structure. Roofing kettles and operating asphalt (tar) kettles shall not block *means of egress*, gates, roadways or entrances.~~

~~**303.3 Location of fuel containers.** Fuel containers shall be located at least 10 feet (3048 mm) from the burner.~~

~~**Exception:** Containers properly insulated from heat or flame are allowed to be within 2 feet (610 mm) of the burner.~~

~~**303.4 Attendant.** An operating kettle shall be attended by a minimum of one employee knowledgeable of the operations and hazards. The employee shall be within 100 feet (30 480 mm) of the kettle and have the kettle within sight. Ladders or similar obstacles shall not form a part of the route between the attendant and the kettle.~~

~~**303.5 Fire extinguishers.** There shall be a portable fire extinguisher complying with Section 906 and with a minimum 40- B:C rating within 25 feet (7620 mm) of each asphalt (tar) kettle during the period such kettle is being utilized. Additionally, there shall be one portable fire extinguisher with a minimum 3-A:40-B:C rating on the roof being covered.~~

~~**303.6 Lids.** Asphalt (tar) kettles shall be equipped with tight- fitting lids.~~

~~**303.7 Hi-boys.** Hi-boys shall be constructed of noncombustible materials. Hi-boys shall be limited to a capacity of 55 gallons (208 L). Fuel sources or heating elements shall not be allowed as part of a hi-boy.~~

~~**303.8 Roofing kettles.** Roofing kettles shall be constructed of noncombustible materials.~~

~~**303.9 Fuel containers under air pressure.** Fuel containers that operate under air pressure shall not exceed 20 gallons (76L) in capacity and shall be *approved*.~~))

* * *

SECTION 304

COMBUSTIBLE WASTE MATERIAL

* * *

304.3 Containers. Combustible rubbish, and waste material kept within or near a structure shall be stored in accordance with Sections 304.3.1 through 304.3.4.

304.3.1 Spontaneous ignition. Materials susceptible to spontaneous ignition, such as oily rags, shall be stored in a *listed* disposal container. Contents of such containers shall be removed and disposed of daily.

304.3.2 Capacity exceeding 5.33 cubic feet. Containers with a capacity exceeding 5.33 cubic feet (40 gallons) (0.15 m3) shall be provided with lids. Containers and lids shall be constructed of noncombustible materials or of combustible materials with a peak rate of heat release not exceeding 300 kW/m2 when tested in accordance with ASTM E 1354 at an incident heat flux of 50 kW/m2 in the horizontal orientation.

Exceptions:

1. Wastebaskets complying with Section 808.

2. Waste accumulated for collection by the City's solid waste utility shall be stored in containers (to include recycling containers) specified in the City's solid waste collection contracts authorized by ordinance.

3. Dumpsters or containers in areas protected by an *approved automatic sprinkler system* installed throughout in accordance with Section 903.3.1.1, 903.3.1.2 or 903.3.1.3.

* * *

SECTION 307

OPEN BURNING, RECREATIONAL FIRES AND PORTABLE OUTDOOR FIREPLACES

307.1 General. A person shall not kindle or maintain or authorize to be kindled or maintained any *open burning*. ((~~unless conducted and *approved* in accordance with this section.~~))

Exception: Bonfires allowed under a permit issued by the fire code official.

((~~**307.1.1 Prohibited open burning.** *Open burning* that is offensive or objectionable because of smoke emissions or when atmospheric conditions or local circumstances make such fires hazardous shall be prohibited.~~

~~**Exception:** Prescribed burning for the purpose of reducing the impact of wildland fire when authorized by the *fire code official*.~~))

307.2 Permit required. A permit shall be obtained from the *fire code official* in accordance with Section 105.6 prior to kindling ((~~a fire for recognized silvicultural or range or wildlife management practices, prevention or control of disease or pests, or~~)) a *bonfire*. ((~~Application for such approval shall only be presented by and permits issued to the *owner* of the land upon which the fire is to be kindled.~~))

307.2.1 Authorization. Where required by state or local law or regulations, ((~~*open burning*~~)) bonfires shall only be permitted with prior approval from the state or local air and water quality management authority, provided that all conditions specified in the authorization are followed.

307.3 Extinguishment authority. When ((~~*open burning*~~)) a bonfire, recreational fire, or portable outdoor fireplace creates or adds to a hazardous situation, or a required permit for ((~~*open burning*~~)) a bonfire has not been obtained, the *fire code official* is authorized to order the extinguishment of the ((~~open~~)) burning operation.

307.4 Location. The location for ((~~*open burning* shall not be less than 50 feet (15 240 mm) from any structure, and provisions shall be made to prevent the fire from spreading to within 50 feet (15 240 mm) of any structure~~)) bonfires, recreational fires, and portable outdoor fireplaces shall be in accordance with sections 307.4.1 through 307.4.3

((~~**Exceptions:**~~

~~1. Fires in *approved* containers that are not less than 15 feet (4572 mm) from a structure.~~

~~2. The minimum required distance from a structure shall be 25 feet (7620 mm) where the pile size is 3 feet (914 mm) or less in diameter and 2 feet (610 mm) or less in height.~~))

* * *

307.5 Attendance. ((~~*Open burning,* b~~)) Bonfires, *recreational fires* and use of portable outdoor fireplaces shall be constantly attended until the fire is extinguished. A minimum of one portable fire extinguisher complying with Section 906 with a minimum 4-A rating or other *approved* on-site fire-extinguishing equipment, such as dirt, sand, water barrel, garden hose or water truck, shall be available for immediate utilization.

307.6 General burning prohibitions Trash, yard waste, rubbish, and paper are prohibited as fuel for bonfires, recreational fires, and fires in outdoor fireplaces.

307.6 Point of Information

Hazards from *bonfires, recreational fires*, and fires in outdoor fireplaces may include but are not limited to smoke or odor emissions causing potential for false alarms, medical alarms, hazards to health, and exposure to other structures from fire.

If conducting a bonfire or recreational fire or if using an outdoor fireplace, fire extinguishing equipment in accordance with SFC 307.5 shall be available for immediate use. For additional regulations and information pertaining to outdoor fires and burning, see RCW 70.94. Go to www.pscleanair.org for information on how to register an air quality complaint with the Puget Sound Clean Air Agency.

See SFD Client Assistance Memo *Recreational and Cooking Fire Regulations* at www.seattle.gov/fire. For air quality and burn ban status information and regulations contact the Puget Sound Clean Air Agency referenced above.

SECTION 308

OPEN FLAMES

308.1 General. Open flame, open flame devices, flame effects, fire and burning on all premises shall be in accordance with Sections 308.1.1 through 308.4.1 and with other applicable sections of this code.

* * *

[W] **((~~308.1.4 Open-flame cooking devices.~~** ~~Charcoal burners and other open-flame cooking devices shall not be operated on combustible balconies or within 10 feet (3048 mm) of combustible construction.~~

~~**Exceptions:**~~

~~1. One- and two-family *dwellings*.~~

~~2. Where buildings, balconies and decks are protected by an *automatic sprinkler system.*~~

~~3. LP-gas cooking devices having LP-gas container with a water capacity not greater than 21/2 pounds [nominal 1 pound (0.454 kg) LP-gas capacity].~~))

308.1.((5))4 Location near combustibles. Open flames such as from candles, lanterns, kerosene heaters and gas-fired heaters shall not be located on or near decorative material or similar combustible materials.

308.1.((6))5 Open-flame devices. Torches and other devices, machines or processes liable to start or cause fire shall not be operated or used in or upon wildfire risk areas, except by a permit in accordance with Section 105.6 secured from the *fire code official*.

Exception: Use within inhabited premises or designated campsites which are a minimum of 30 feet (9144 mm) from grass-, grain-, brush- or forest-covered areas.

308.1.((6))5.1 Signals and markers. Flame-employing devices, such as lanterns or kerosene road flares, shall not be operated or used as a signal or marker in or upon wildfire risk areas.

Exception: The proper use of fuses at the scenes of emergencies or as required by standard railroad operating procedures.

308.1.((6))5.2 Portable fueled open-flame devices. Portable open-flame devices fueled by flammable or combustible gases or liquids shall be enclosed or installed in such a manner as to prevent the flame from contacting combustible material.

Exceptions:

1. LP-gas-fueled devices used for sweating pipe joints or removing paint in accordance with Chapter 38.
2. Cutting and welding operations in accordance with Chapter 26.
3. Torches or flame-producing devices in accordance with Section 308.1((4))3 and 308.1.5.

4. Candles and open-flame decorative devices in accordance with Section 308.1((~~3~~))4.

308.1.((6))5.3 Sky lanterns. A person shall not ignite, release or cause to be released a ((~~n untethered~~)) sky lantern or like materials.

[W] 308.1.((~~7~~))6 Religious ceremonies. ((~~When, in the opinion of the *fire code official*, adequate safeguards have been taken, participants in religious ceremonies are allowed to carry hand-held candles.~~)) Participants in religious ceremonies shall not be precluded from carrying hand-held candles. Hand-held candles shall not be passed from one *person* to another while lighted.

[W] 308.1.((~~7~~))6.1 Aisles and exits. Candles shall be prohibited in areas where occupants stand, or in an *aisle* or *exit*.

Exception: Candles used in religious ceremonies.

308.1.((~~8~~))7 Flaming food and beverage preparation. The preparation of flaming foods or beverages in places of assembly and drinking or dining establishments shall be in accordance with Sections 308.1.((~~8~~))7.1 through 308.1.((~~8~~))7.5.

308.1.((~~8~~))7.1 Dispensing. Flammable or *combustible liquids* used in the preparation of flaming foods or beverages shall be dispensed from one of the following:

1. A 1-ounce (29.6 ml) container; or
2. A container not exceeding 1-quart (946.5 ml) capacity with a controlled pouring device that will limit the flow to a 1-ounce (29.6 ml) serving.

308.1.((~~8~~))7.2 Containers not in use. Containers shall be secured to prevent spillage when not in use.

308.1.((~~8~~))7.3 Serving of flaming food. The serving of flaming foods or beverages shall be done in a safe manner and shall not create high flames. The pouring, ladling or spooning of liquids is restricted to a maximum height of 8 inches (203 mm) above the receiving receptacle.

308.1.((8))7.4 Location. Flaming foods or beverages shall be prepared only in the immediate vicinity of the table being serviced. They shall not be transported or carried while burning.

308.1.((8))7.5 Fire protection. The *person* preparing the flaming foods or beverages shall have a wet cloth towel immediately available for use in smothering the flames in the event of an emergency.

* * *

308.2 Permits required. Permits shall be obtained from the *fire code official* in accordance with Section 105.6 prior to engaging in the following activities involving open flame, open flame devices and flame effects, fire and burning:

1. Use of a torch or flame-producing device to remove paint from a structure.
2. Use of open flame, open flame devices and flame effects, fire or burning before an audience in connection with Group A, B or E occupancies, covered malls and outdoor assembly events.
3. Use or operation of torches and other open flame devices, machines or processes liable to start or cause fire in or upon wildfire risk areas.

308.2.1 Financial responsibility. Before a permit is issued, liability insurance in accordance with Section 105.3.9 of this code shall be obtained.

308.3 Group A occupancies. Open-flames, open flame devices and flame effects shall not be used in a Group A occupancy.

Exceptions:

1. Open-flames, open flame devices and flame effects are allowed to be used in the following situations, provided *approved* precautions are taken to prevent ignition of a combustible material or injury to occupants:

1.1. Where necessary for ceremonial or religious purposes in accordance with Section 308.1.7.

1.2 ((~~On stages and platforms as~~)) As a necessary part of a performance before an audience in accordance with Section 308.3.2.

1.3 Where candles on tables are securely supported on substantial noncombustible bases and the candle flames are protected.

1.3. Heat-producing equipment complying with Chapter 6 and the *International Mechanical Code*.

1.4. Gas lights are allowed to be used provided adequate precautions satisfactory to the *fire code official* are taken to prevent ignition of combustible materials

* * *

308.3.2 ((~~**Theatrical performances**~~)) **Performances before an audience.** Where *approved*, open flames, open flame devices and flame effects used in conjunction with ((~~theatrical~~)) performances before an audience are allowed to be used in venues protected by an approved automatic sprinkler systems in accordance with Section 903 when adequate safety precautions have been taken in accordance with NFPA 160.

308.4 Group R occupancies. Open flame, fire and burning in Group R occupancies shall comply with the requirements of Sections 308.1 through 308.1.((~~6~~))5.2 and 308.4.1.

* * *

SECTION 310

SMOKING

* * *

310.3 "No Smoking" signs. The *fire code official* is authorized to order the posting of "No Smoking" signs in a conspicuous location in each structure or location in which smoking is

prohibited. The content, lettering, size, color and location of required "No Smoking" signs shall be *approved*.

Exception: In Group I-2 occupancies where smoking is prohibited, "No Smoking" signs are not required in interior locations of the facility where signs are displayed at all major entrances into the facility.

310.3 Point of Information

See *Seattle Municipal Code* 10.64 for requirements for posting "no smoking" signs in public places.

* * *

SECTION 311

VACANT PREMISES

* * *

311.1.1 Abandoned premises. Buildings, structures and premises ((~~for which an *owner* cannot be identified or located by dispatch of a certificate of mailing to the last known or registered address,~~)) which persistently or repeatedly become unprotected or unsecured, which have been occupied by unauthorized *persons* or for illegal purposes, or which present a danger of structural collapse or fire spread to adjacent properties ((~~shall~~)) may be considered abandoned, declared unsafe and abated by demolition or rehabilitation in accordance with the ((~~*International Property Maintenance Code* and the~~)) *International Building Code and Seattle Municipal Code*.

* * *

311.2.2 Fire protection. Fire alarm, sprinkler and standpipe systems shall be maintained in an operable condition at all times.

Exceptions:

1. When the premises have been cleared of all combustible materials and debris and, in the opinion of the *fire code official*, the type of construction, *fire separation distance* and security of the premises do not create a fire hazard.
2. Where *approved* by the *fire* ((~~chief~~)) *code official*, buildings that will not be heated and where *fire protection systems* will be exposed to freezing temperatures, fire alarm and sprinkler systems are permitted to be placed out of service and standpipes are permitted to be maintained as dry systems (without an automatic water supply), provided the building has no contents or storage, and windows, doors and other openings are secured to prohibit entry by unauthorized *persons*.

* * *

311.5 Placards. ((~~A~~)) If any vacant or abandoned buildings or structures are determined to be unsafe pursuant to Section 110 of this code relating to structural or interior hazards the fire code official shall be authorized to require marking ((~~shall be marked~~)) as required by Sections 311.5.1 through 311.5.5.

* * *

SECTION 313

FUELED EQUIPMENT

313.1 General. Fueled equipment including, but not limited to, vehicles, watercraft, motorcycles, mopeds, lawn-care equipment, portable generators and portable cooking equipment, shall not be stored, operated or repaired within a building.

Exceptions:

1. Buildings or rooms constructed for such use in accordance with the *International Building Code*.
2. Where allowed by Section 314.
3. Storage of equipment utilized for maintenance purposes is allowed in *approved* locations when the aggregate fuel capacity of the stored equipment does not exceed 10 gallons (38 L) and the building is equipped throughout with an *automatic sprinkler system* installed in accordance with Section 903.3.1.1.

* * *

315.2 Permit required. A permit for ((~~miscellaneous~~)) combustible storage shall be required as set forth in Section 105.6.

* * *

315.2.2.1 Storage under stairways. Storage is prohibited under exit stairways.

Exception: Enclosures under stairways in accordance with Section 1011.7.

* * *

315.3.5 Non high-piled storage arrangements. Storage shall be within 20 feet of the two aisles each at least 44 inches wide. No block pile shall exceed 40 feet by 40 feet unless approved by the *fire code official*. No dead-end aisle shall be longer than 10 times the width. All storage in unsprinklered areas shall be within 150 feet (45720mm) aisle travel of fire department exterior access openings.

* * *

315.4.2 Height. Storage in the open shall not exceed 20 feet (6096 mm) in height.

Exception: Boat storage in accordance with NFPA 303.

* * *

315.7 Basement storage and sale of combustible materials. Storage and sale of combustible material in basements shall be in accordance with sections 315.7.1 through 315.7.5.

315.7.1 Storage room size. Combustible material being stored or available for sales shall be placed in rooms no larger than 500 sq. ft. (46.5 m^2)

315.7.2 Storage room construction. Each storage room shall be separated from other areas by fire barriers with at least one hour fire-resistance rating.

315.7.3 Number of storage rooms. There shall be a maximum of three storage rooms within any one basement.

315.7.4 Storage room access. Each storage room shall be provided with access directly from the building exterior, or through a one-hour fire resistance rated corridor between each room and an exterior door, or exit enclosure.

315.7.5 Storage room restrictions. Storage rooms shall not contain any material classified as a flammable liquid, hazardous material, or highly combustible material.

Exception: Areas protected with an approved automatic sprinkler system that are separated from other areas in the basement by fire barriers with at least a one-hour fire resistance.

* * *

SECTION 319

FIXED GUIDEWAY TRANSIT AND PASSENGER RAIL SYSTEMS

319.1 Fixed guideway transit and passenger rail systems. Fixed guideway transit and passenger rail systems shall be in accordance with NFPA 130 as amended.

319 Point of Information

Adopted local amendments to NFPA 130 can be accessed at

http://www.seattle.gov/fire/FMO/firecode/nfpaAmendments.htm

SECTION 320

ROAD TUNNELS, BRIDGES AND OTHER LIMITED ACCESS HIGHWAYS

320.1 Road tunnels, bridges and other limited access highways. Road tunnels, bridges, and other limited access highways shall be in accordance with NFPA 502 as amended.

320 Point of Information

Adopted local amendments to NFPA 502 can be accessed at

http://www.seattle.gov/fire/FMO/firecode/nfpaAmendments.htm

* * *

Section 6. Chapter 4 of the 2015 International Fire Code is amended as follows:

CHAPTER 4

EMERGENCY PLANNING AND PREPAREDNESS

SECTION 401

GENERAL

* * *

[W] 401.2 Approval. Where required by ((~~this code~~)) the *fire code official*, fire safety plans, emergency procedures and employee training programs shall be *approved* ((~~by the *fire code official*~~)).

* * *

401.9 Evacuation required. In the event of activation of a fire or emergency alarm, occupants of the building or portion of the building in which the alarm is activated shall make a safe and

orderly evacuation out of the building, or as provided in the building's fire safety and evacuation plan.

Exceptions:

1. Where the occupant's physical or other disability makes the occupant unable to evacuate without assistance and no assistance is immediately available; or
2. Where the presence of smoke, fire, structural collapse or other hazard or obstruction in the occupant's means of egress makes evacuation unsafe.

SECTION 402

DEFINITIONS

402.1 Definition. The following terms are defined in Chapter 2.

[W] ALARM SIGNAL.

[W] ALERT SIGNAL.

[W] ALERT SYSTEM.

[W] EMERGENCY ((~~EVACUATION~~)) DRILL.

[W] ((~~LOCKDOWN.~~))

[W] SHELTER-IN-PLACE.

[W] RECALL SIGNAL.

SECTION 403

EMERGENCY PREPARADNESS REQUIREMENTS

* * *

[W] 403.2 Group A occupancies. An approved fire safety and evacuation plan in accordance with Section 404 shall be prepared and maintained for Group A *occupancies* having an occupant load of 100 or more, other than those occupancies used exclusively for purposes of religious

worship with an occupant load less than 2,000, and for buildings containing both a Group A occupancy and an atrium. Group A occupancies shall comply with Sections 403.2.1 through 403.2.4.

* * *

[W] 403.3.1 Fire evacuation plan. The fire safety and evacuation plan required by Section 404 shall include a description of special staff actions. This shall include ((~~procedures~~)) a description for stabilizing patients in a ((~~defend-in-place response,~~)) staged evacuation((~~,~~)) or full evacuation in conjunction with the entire building, if part of a multitenant facility.

* * *

[W] 403.5.4 Assembly points and fire operations. Assembly points shall not be in areas likely to be utilized for fire service operations.

* * *

[W] 403.10.2 Group R-2 occupancies. Group R-2 occupancies shall comply with Sections 403.10.2.1 through 403.10.2.((~~3~~))4.

* * *

[W] 403.10.2.4 Group R-2 assisted living and residential care facilities. Assisted living and residential care facilities licensed by the state of Washington shall comply with Section 403.8.1 as required for Group I-1 Condition 2 occupancies.

* * *

[W] ((~~403.10.3 Group R-4 occupancies.~~ ~~An *approved* fire safety and evacuation plan in accordance with Section 404 shall be prepared and maintained for Group R-4 occupancies. Group R-4 occupancies shall comply with Sections 403.10.3.1 through 403.10.3.6.~~

~~**403.10.3.1 Fire safety and evacuation plan.** The fire safety and evacuation plan required by Section 404 shall include special employee actions, including fire protection procedures necessary for residents, and shall be amended or revised upon admission of a resident with unusual needs.~~

~~**403.10.3.1.1 Fire safety plans.** A copy of the plan shall be maintained at the facility at all times. Plans shall include the following in addition to the requirements of Section 404:~~

~~1. Location and number of resident sleeping rooms.~~

~~2. Location of special locking or egress control arrangements.~~

~~**403.10.3.2 Employee training.** Employees shall be periodically instructed and kept informed of their duties and responsibilities under the plan. Records of instruction shall be maintained. Such instruction shall be reviewed by employees at intervals not exceeding two months. A copy of the plan shall be readily available at all times within the facility.~~

~~**403.10.3.3 Resident training.** Residents capable of assisting in their own evacuation shall be trained in the proper actions to take in the event of a fire. The training shall include actions to take if the primary escape route is blocked. Where the resident is given rehabilitation or habilitation training, methods of fire prevention and actions to take in the event of a fire shall be a part of the rehabilitation training program. Residents shall be trained to assist each other in case of fire to the extent their physical and mental abilities permit them to do so without additional personal risk.~~

~~**403.10.3.4 Drill frequency.** In addition to the evacuation drills required in Section 405.2, employees shall participate in drills an additional two times a year on each shift. Twelve drills with all occupants shall be conducted in the first year of operation.~~

~~**403.10.3.5 Drill times.** Drill times are not required to comply with Section 405.4.~~

~~**403.10.3.6 Resident participation in drills.** Emergency evacuation drills shall involve the actual evacuation of residents to a selected assembly point and shall provide residents with experience in exiting through all required exits. All required exits shall be used during emergency evacuation drills.~~

~~**Exception:** Actual exiting from emergency escape and rescue windows shall not be required. Opening the emergency escape and rescue window and signaling for help shall be an acceptable alternative.~~))

* * *

403.11.1.3 Lease plan ((~~approval~~)). The lease plan shall be ((~~submitted to the *fire code official* for approval, and shall be~~)) maintained on site for immediate reference by responding fire service personnel.

403.11.1.4 Lease plan revisions. The lease plans shall be revised annually or as often as necessary to keep them current. ((~~Modifications or changes in tenants or occupancies shall not be made without prior approval of the *fire code official* and building official.~~))

* * *

403.11.5 Fire safety plans for structures under construction, alteration and demolition. A fire safety plan for structures under construction, alteration and demolition shall be developed as required by Section 3308.1. The plan shall the following information:

1. Procedures for reporting emergencies to the Fire department.
2. Procedures for emergency notification, evacuation and/or relocation of all persons in the building under construction and on the site.
3. Procedures for hot work operations, management of hazardous materials and removal of combustible debris and maintenance of emergency access roads.

4. Security measures to prevent unauthorized people from gaining access to the site.
5. Installation of new fire protection systems, where applicable, as construction progresses.
6. Floor plans identifying the locations of exits, exit stairs, exit routes and portable fire extinguishers.
7. Site plans identifying the designated exterior assembly areas for each evacuation route.
8. Site plans identifying required fire apparatus access roadways and on-site fire hydrants.
9. The name and contact phone number of the person(s) responsible for compliance with the Fire Protection Plan.

* * *

403.12.1 Fire watch and standby fire personnel. Where, in the opinion of the *fire code official*, it is essential for public safety in a place of assembly or any other place where people congregate, because of the number of persons, or the nature of the performance, exhibition, display, contest or activity, the *owner*, agent or lessee shall provide, at no cost to the jurisdiction, one or more fire watch or standby fire personnel, as required and *approved*. Fire watch personnel shall comply with Sections 403.12.1.1 and 403.12.1.2.

403.12.1.1 Duty times. Fire watch personnel shall remain on duty while places requiring a fire watch are open to the public, or when an activity requiring a fire watch is being conducted.

403.12.1.2 Duties. On-duty fire watch personnel shall have the following responsibilities:

1. Keep diligent watch for fires, obstructions to *means of egress* and other hazards.
2. Take prompt measures for remediation of hazards and extinguishment of fires that occur.
3. Take prompt measures to assist in the evacuation of the public from the structures.

Fire watch personnel and standby fire personnel are subject to the *fire code official*'s orders at all times; shall remain on duty during the times such places are open to the public, or as

otherwise required by *fire code official*; and shall not be required or permitted, while on duty, to perform any duties other than those specified by the *fire code official*.

Where a fire protection system is out of service, the procedures detailed in Administrative Rule 9.04.14, Impaired Fire Protection Systems and any future revisions of this rule adopted by the *fire code official* shall be implemented.

403.12.2 Public safety plan for gatherings. ((~~Where the *fire code official* determines that an indoor or outdoor gathering of persons has~~)) An approved public safety plan shall be developed for outdoor assembly events when the projected attendance exceeds 6,000 persons and for indoor or outdoor assembly events when the *fire code official* believes the event may have an adverse impact on public safety through diminished access to buildings, structures, fire hydrants and fire apparatus access roads or ((~~where such gatherings~~)) may adversely affect public safety services of any kind ((~~, the *fire code official* shall have the authority to order the development of or prescribe a public safety plan that provides an *approved* level of public safety and addresses the following items~~)) The public safety plan shall include an assessment of all of the following conditions and related safety measures:

((~~1. Emergency vehicle ingress and egress.~~

~~2. Fire protection.~~

~~3. Emergency egress or escape routes.~~

~~4. Emergency medical services.~~

~~5. Public assembly areas.~~

~~6. The directing of both attendees and vehicles, including the parking of vehicles.~~

~~7. Vendor and food concession distribution.~~

~~8. The need for the presence of law enforcement.~~

~~9. The need for fire and emergency medical services personnel.~~))

1. Nature of the events and the participants and attendees.

2. Access and egress movement, including crowd density problems.

3. Medical emergencies.

4. Fire hazards and/or fire protection equipment provided.

5. Permanent and temporary structural systems.

6. Severe weather conditions.

7. Earthquakes.

8. Civil or other disturbances.

9. Hazardous materials incidents within and near the facility.

10. Acts of terrorism within and near the facility.

11. Relationships among facility management, event participants, emergency response agencies, and others having a role in the assembly events.

[W] 403.12.3 Crowd managers for gatherings exceeding 1,000 people. Where facilities or events involve a gathering of more than 1,000 people, or as required by the fire code official, crowd managers shall be provided in accordance with Sections 403.12.3.1 through 403.12.3.3.

* * *

[W] SECTION 404

FIRE SAFETY ((,)) AND ((~~EVACUATION AND LOCKDOWN~~)) EMERGENCY PLANS

[W] 404.1 General. Where required by Section 403, fire safety, evacuation, shelter-in-place plans and ((~~lockdown plans~~)) associated drills shall comply with Sections 404.2.1 through 404.4.((~~2.2~~))2.3.4.

* * *

[W] 404.2.1 Fire evacuation plans. Fire evacuation plans shall include the following:

1. Emergency egress or escape routes and whether evacuation of the building is to be complete, or where approved, by selected floors or areas only. ((~~or with a defend-in place response.~~))

2. Procedures for employees who must remain to operate critical equipment before evacuating.

3. Procedures for the use of elevators to evacuate the building where occupant evacuation elevators complying with Section 3008 of the *International Building Code* are provided.

4. Procedures for assisted rescue for persons unable to use the general *means of egress* unassisted.

5. Procedures for accounting for employees and occupants after evacuation has been completed.

6. Identification and assignment of personnel responsible for rescue or emergency medical aid.

7. The preferred and any alternative means of notifying occupants of a fire or emergency.

8. The preferred and any alternative means of reporting fires and other emergencies to the fire department or designated emergency response organization.

9. Identification and assignment of personnel who can be contacted for further information or explanation of duties under the plan.

10. A description of the emergency voice/alarm communication system alert tone and preprogrammed voice messages, where provided.

404.2.2 Fire safety plans. Fire safety plans shall include the following:

1. The procedure for reporting a fire or other emergency.

2. The life safety strategy including the following:

2.1. Procedures for notifying occupants, including areas with a private mode alarm system.

2.2. Procedures for occupants under a defend-in place response.

2.3. Procedures for evacuating occupants, including those who need evacuation assistance.

3. Site plans indicating the following:

3.1. The occupancy assembly point.

3.2. The locations of fire hydrants.

3.3. The normal routes of fire department ((~~vehicle~~)) apparatus access.

4. Floor plans identifying the locations of the following:

4.1. Exits.

4.2. Primary evacuation routes.

4.3. Secondary evacuation routes.

4.4. Accessible egress routes.

4.4.1. Areas of refuge.

4.4.2. Exterior areas for assisted rescue.

4.5. Refuge areas associated with *smoke barriers* and *horizontal exits*.

4.6. Manual fire alarm boxes.

4.7. Portable fire extinguishers.

4.8. Occupant-use hose stations.

4.9. Fire alarm annunciators and controls.

5. A list of major fire hazards associated with the normal use and occupancy of the premises, including maintenance and housekeeping procedures.

6. Identification and assignment of personnel responsible for maintenance of systems and equipment installed to prevent or control fires.

7. Identification and assignment of personnel responsible for maintenance, housekeeping and controlling fuel hazard sources.

* * *

[W] ((~~404.2.3 Lockdown plans.~~ ~~Where facilities develop a lock- down plan, the lockdown plan shall be in accordance with Sections 404.3.3.1 through 404.3.3.3.))~~

~~**404.2.3.1 Lockdown plan contents.**~~ ~~Lockdown plans shall be *approved* by the *fire code official* and shall include the following:~~

~~1. Initiation. The plan shall include instructions for reporting an emergency that requires a lockdown.~~

~~2. Accountability. The plan shall include accountability procedures for staff to report the presence or absence of occupants.~~

~~3. Recall. The plan shall include a prearranged signal for returning to normal activity.~~

~~4. Communication and coordination. The plan shall include an *approved* means of two-way communication between a central location and each secured area.~~

~~**404.2.3.2 Training frequency.**~~ ~~The training frequency shall be included in the lockdown plan. The lockdown drills shall not substitute for any of the fire and evacuation drills required in Section 405.2.~~

~~**404.2.3.3 Lockdown notification.**~~ ~~The method of notifying building occupants of a lockdown shall be included in the plan. The method of notification shall be separate and distinct from the fire alarm signal.~~))

* * *

[W] 404.2.3 Shelter-in-place plans. Shelter-in-place plans shall comply with the requirements of Sections 404.2.3.1 through 404.2.3.3.

[W] 404.2.3.1 Where required. A shelter-in-place plan shall be prepared and maintained for all Group E occupancies.

Exception: Daycares not collocated on a Group E campus.

[W] 404.2.3.2 Shelter-in-place plan contents. Shelter-in-place plans shall include the following:

1. Identification of the procedures for initiating the shelter-in-place plan throughout the facility or campus.
2. Identification of prearranged alert and recall signals to notify all occupants.
3. Identification of procedures for reporting the facility is sheltering-in-place to the local emergency dispatch center.
4. A means of two-way communication between a central location and each secure area, and consideration for maintaining means of communication in absence of primary power.
5. Identification of protective security measures.
6. Location of emergency supplies.
7. Accountability procedures for staff to report the presence or absence of occupants.
8. Identification of crisis response team members in accordance with the National Incident Management System.
9. Actions to be taken in the event of a fire or medical emergency while sheltering-in-place

[W] 404.2.3.3 Maintenance. Emergency plans shall be reviewed or updated annually or as necessitated by changes in staff assignments, occupancy or the physical arrangement of the building.

[W] 404.2.3.4 Availability. Emergency plans shall be available in the workplace for reference and review by employees, and copies shall be furnished to the fire code official for review upon request.

SECTION 405

EMERGENCY ((~~EVACUATION~~)) DRILLS

[W] 405.1 General. Emergency ((~~evacuation~~)) drills complying with Sections 405.2 through 405.9 shall be conducted not less than annually where fire safety and evacuation plans are required by Section 403 or where required by the *fire code official*. Drills shall be designed in cooperation with the local authorities.

[W] 405.2 Frequency. Required emergency ((~~evacuation~~)) drills shall be held at the intervals specified in Table 405.2 or more frequently where necessary to familiarize all occupants with the drill procedure.

[W] 405.2.1 Group E Occupancies. The occupancy shall conduct at a minimum the following drills during the school year.

1. One drill using the school mapping information system

   Exception: Daycares not co-located on a school campus.

2. Three fire evacuation drills.
3. One shelter-in-place drill.
4. Additional drills as required by RCW 28.A.320.125.

[W]TABLE 405.2

((~~FIRE AND EVACUATION~~)) EMERGENCY DRILL FREQUENCY AND PARTICIPATION

GROUP OR OCCUPANCY	FREQUENCY	PARTICIPATION
Group A	Quarterly	Employees
Group B[b]	Annually	All occupants
Group B[b,c] (Ambulatory care facilities)	Annually	Employees

Group B[b] (Clinic, outpatient)	Annually	Employees
Group E	Monthly[a,c]	All occupants
Group F	Annually	Employees
Group I-1	((~~Semiannually~~)) Quarterly on each shift	All occupants[g]
Group I-2	Quarterly on each shift[a]	Employees
Group I-3	Quarterly on each shift[a]	Employees
Group I-4	((~~Monthly~~)) Quarterly on each shift[a]	All occupants
Group R-1	Quarterly on each shift	Employees
Group R-2[f]	Quarterly on each shift	Employees
Group R-2[d]	Four Annually	All occupants
((~~Group R-4~~))	((~~Quarterly on each shift~~))	((~~Employees[b]~~))
High rise buildings	Annually	Employees

a. In severe climates, the *fire code official* shall have the authority to modify the emergency evacuation drill frequency.

b. Emergency evacuation drills are required in Group B buildings having an *occupant load* of 500 or more persons or more than 100 persons above or below the lowest *level of exit discharge*.

c. Emergency evacuation drills are required in ambulatory care facilities in accordance with Section 403.3.

d. Emergency evacuation drills in Group R-2 college and university buildings shall be in accordance with Section 403.10.2.1. Other Group R-2 occupancies shall be in accordance with Section 403.10.2.2.

e. Daycares collocated on a Group E campus shall participate in emergency drills occurring on the campus.

f. Applicable to boarding homes, group homes and residential treatment facilities licensed by the state of Washington.

g. Fire and evacuation drills in residential care assisted living facilities shall include complete evacuation of the premises in accordance with Section 403.8.1.3. Where occupants receive habilitation or rehabilitation training, fire prevention and safety practices shall be included as part of the training program.

Table 405.2 Point of Information

The State of Washington does not adopt Group R-4 occupancies. Group R-4 occupancies are considered "Group R-2 occupancies licensed by the state of Washington". Special provisions may apply.

405.3 Leadership. Responsibility for the planning and conduct of drills shall be assigned to competent persons designated to exercise leadership.

[W] 405.4 Time. Drills shall be held at unexpected times and under varying conditions to simulate the unusual conditions that occur in case of an emergency. ((~~fire.~~))

[W] 405.5 Record keeping. Records shall be maintained of required emergency evacuation drills and include the following information:

1. Identity of the person conducting the drill.
2. Date and time of the drill.
3. Notification method used.
4. Employees on duty and participating.
5. Number of occupants participating. ((~~evacuated.~~))
6. Special conditions simulated.
7. Problems encountered and corrective actions taken.
8. Weather conditions when occupants were evacuated.

9. Time required to accomplish complete evacuation.

405.6 Notification. Where required by the *fire code official*, prior notification of emergency evacuation drills shall be given to the *fire code official*.

[W] 405.7 Initiation. ((~~Where a fire alarm system is provided, emergency evacuation drills shall be activated by the fire alarm system.~~)) Emergency drills shall be initiated in accordance with Sections 405.7.1 through 405.7.3.

[W] 405.7.1 Fire evacuation drills. Where a fire alarm system is provided, emergency evacuation drills shall be initiated by activating the fire alarm system. The fire alarm monitoring company shall be notified prior to the activation of the fire alarm system for a proposed drill and again at the conclusion of the transmission and restoration of the fire alarm system to normal mode.

Exception: Evacuation drills conducted between the hours of 9:00 p.m. and 6:00 a.m. in assisted living facilities, group homes, and residential treatment facilities licensed by the State of Washington.

[W] 405.7.2 Shelter-in-place drills. Shelter-in-place drills shall be initiated by the shelter-in-place alert signal, generated by an alerting system in accordance with Section 907.5.2.

[W] 405.8 Accountability. As building occupants arrive at the assembly point, efforts shall be made to determine if all occupants have been successfully evacuated and/or have been accounted for in the shelter-in-place.

[W] 405.9 Recall and reentry. ((~~An electrically or mechanically operated signal used to recall occupants after an evacuation shall be separate and distinct from the signal used to initiate the evacuation.~~)) The recall signal initiation ((~~means~~)) shall be manually operated and under the

control of the person in charge of the premises or the official in charge of the incident. No one shall reenter the premises until authorized to do so by the official in charge.

* * *

[W] 406.1 Where fire safety and ((~~evacuation~~)) emergency plans are required by Section 403, employees shall be trained in ((~~fire~~)) the emergency procedures based on plans prepared in accordance with Section 404.

[W] 406.2 Frequency. Employees shall receive training in the contents of ((~~fire safety and evacuation~~)) the emergency plans and their duties as part of new employee orientation and at least annually thereafter. Records of training shall be maintained and made available to the fire code official upon request.

[W] 406.3 Employee training program. Employees shall be trained in fire prevention, evacuation, sheltering-in-place, and fire safety in accordance with Sections 406.3.1 through 406.3.4.

* * *

[W] 406.3.4 Emergency shelter-in-place training. Where a facility has a shelter-in-place plan, employees shall be trained on the alert and recall signals, communication systems, location of emergency supplies, the use of incident notification and alarm system, and their assigned duties and procedures in the event of an alarm or emergency.

[W]((~~406.4 Emergency lockdown training.~~ ~~Where a facility has a lockdown plan, employees shall be trained on their assigned duties and procedures in the event of an emergency lockdown.~~))

Section 7. Chapter 5 of the 2015 International Fire Code is amended as follows:

CHAPTER 5

FIRE SERVICE FEATURES

* * *

SECTION 503

FIRE APPARATUS ACCESS ROADS

503.1 Where required. Fire apparatus access roads shall be provided and maintained in accordance with Sections 503.1.1 through 503.1.3 and Appendix D as amended.

* * *

503.2.1 Dimensions. Fire apparatus access roads shall have an unobstructed width of not less than 20 feet (6096 mm), exclusive of shoulders, except for *approved* security gates in accordance with Section 503.6, and an unobstructed vertical clearance of not less than ((~~13 feet 6 inches (4115 mm)~~)) 14 feet.

Exceptions:

1. Access roads serving not more than two Group R-3 or U occupancies shall have an unobstructed width of not less than 12 feet.
2. Public streets shall be in accordance with Seattle Right of Way Improvements Manual.

* * *

503.2.4 Turning radius. The required turning radius of a fire apparatus access road shall be ((~~determined by the *fire code official*.~~)) 25 feet minimum inside curb and 50 feet minimum outside curb.

503.2.5 Dead ends. Dead-end fire apparatus access roads in excess of 150 feet (45 720 mm) in length shall be provided with ((~~an *approved* area for turning around fire apparatus.~~)) a turnaround in accordance with Appendix D as amended.

503.2.6 Bridges and elevated surfaces. Where a bridge or an elevated surface is part of a fire apparatus access road, the bridge shall be constructed and maintained in accordance ((~~AASHTO HB 17.~~)) with the Seattle Right of Way Improvements Manual. Bridges and elevated surfaces shall be designed for a live load sufficient to carry the imposed loads of fire apparatus. Vehicle load limits shall be posted at both entrances to bridges when required by the *fire code official*. Where elevated surfaces designed for emergency vehicle use are adjacent to surfaces which are not designed for such use, *approved* barriers, *approved* signs or both shall be installed and maintained when required by the *fire code official*.

503.2.7 Grade. The grade of the fire apparatus access road shall be ((~~within the limits established by the *fire code official* based on the fire department's apparatus.~~)) in accordance with Appendix D as amended.

503.2.8 Angles of approach and departure. The angles of approach and departure for fire apparatus access roads shall be ((~~within the limits established by the *fire code official* based on the fire department's apparatus.~~)) in accordance with the Seattle Right of Way Improvements Manual.

* * *

503.6 Security gates. The installation of security gates across a fire apparatus access road shall be *approved* by the *fire* ((~~chief~~)) *code official*. Where security gates are installed, they shall have an *approved* means of emergency operation. The security gates and the emergency operation shall be maintained operational at all times. Electric gate operators, where provided, shall be

listed in accordance with UL 325. Gates intended for automatic operation shall be designed, constructed and installed to comply with the requirements of ASTM F 2200.

* * *

SECTION 506

KEY BOXES

* * *

506.1 Where required. Key boxes shall be installed in accordance with this section:

506.1.1 Access key box. Where access to or within a structure or an area is restricted because of secured openings or where immediate access is necessary for life-saving or fire-fighting purposes, the *fire code official* is authorized to require a key box to be installed in an *approved* location. The key box shall be of an *approved* type listed in accordance with UL 1037, and shall contain keys to gain necessary access as required by the *fire code official*.

506.1 Point of Information

The *fire code official* has approved the "KnoxBox" as the access key box for use in the City of Seattle. For more information see Seattle Fire Department Information Bulletin 5965 Key Boxes for Emergency Access.

((~~**506.1.2 Key boxes for nonstandardized fire service elevator keys.** Key boxes provided for nonstandardized fire service elevator keys shall comply with Section 506.1 and all of the following:~~

~~1. The key box shall be compatible with an existing rapid entry key box system in use in the jurisdiction and *approved* by the *fire code official*.~~

~~2. The front cover shall be permanently labeled with the words "Fire Department Use Only – Elevator Keys."~~

~~3. The key box shall be mounted at each elevator bank at the lobby nearest to the lowest level of fire department access.~~

~~4. The key box shall be mounted 5 feet 6 inches (1676 mm) above the finished floor to the right side of the elevator bank.~~

~~5. Contents of the key box are limited to fire service elevator keys. Additional elevator access tools, keys and information pertinent to emergency planning or elevator access shall be permitted when authorized by the *fire code official*.~~

~~6. In buildings with two or more elevator banks, a single key box shall be permitted to be used when such elevator banks are separated by not more than 30 feet (9144 mm). Additional key boxes shall be pro- vided for each individual elevator or elevator bank separated by more than 30 feet (9144 mm).~~

~~**Exception:** A single key box shall be permitted to be located adjacent to a *fire command center* or the non- standard fire service elevator key shall be permitted to be secured in a key box used for other purposes and located in accordance with Section 506.1.~~))

506.1.2. Elevator key box. An elevator key box locked and keyed to the standard city elevator key box access key shall be provided at the designated recall floor above the Phase I recall switch or in the main lobby above the hall call button when no recall feature exists.

506.1.2.1 Elevator key box requirements. The elevator key box shall meet the following standards:

1. Dimensions – 8 inches high, 6 inches wide and 1 inches deep.

2. Material – 16 gauge steel welded.

3. Color – red unless located in the main lobby above the call button, six feet nominal above the floor, in which case any color is approved.

4. Labeling – "FOR EMERGENCY USE."

5. Lock – openable with factory restricted Medeco 3, level 7 key..

6. Mounting height shall be 6 feet nominal above the floor.

506.1.2.2 Elevator key box contents. Keys for access to and for the operation of elevator equipment shall be tagged, labeled and retained in the key box. The elevator key box shall contain standard and non-standard fire emergency service keys (Phase I and II, one key for each switch). The elevator key box may, in addition, contain keys for any or all of the following:

1. Machine room door;

2. Secondary level door;

3. Pit door;

4. Roof door;

5. Independent, hospital emergency and/or attendant operation;

6. Hoistway access;

7. Mechanical hoist access devices (broken arm, lunar, etc.);

8. Miscellaneous switch keys;

9. Fire alarm panel room;

10. Sprinkler valve control room

506.1.2.2 Point of Information

Due to security consideration, elevator key boxes should not contain master keys to tenant spaces. Keys in elevator key boxes should be limited to those for access of the building systems and equipment listed in *Seattle Fire Code*, Section 506.1.2.2.

506.1.((~~1~~))3 Locks. An approved lock shall be installed on gates or similar barriers when required by the fire code official.

* * *

SECTION 507

FIRE PROTECTION WATER SUPPLIES

507.1 Required water supply. An *approved* water supply capable of supplying the required fire flow for fire protection shall be provided to premises upon which facilities, buildings or portions of buildings are hereafter constructed or moved into or within the jurisdiction, and for buildings undergoing a substantial alteration as determined by the Seattle Department of Construction and Inspections.

* * *

507.3 Fire flow. Fire flow requirements for buildings or portions of buildings and facilities shall be ((~~determined by an *approved* method.~~)) in accordance with Appendix B.

Exceptions:

1. Fire flow requirements for shipyards and designated marine hot work facilities shall be in accordance with Administrative Rule 26.02.14 and any future revisions to this rule adopted by the *fire code official.*
2. Fire flow requirements for new and existing covered marinas shall be in accordance with Chapters 36 and 94 respectively.
3. [W] Fire flow is not required for structures under 500 square feet with a B, U, or I occupancy where structures are at least 30 feet from any other structure and are used only for recreation.

* * *

507.5.6 Physical protection. Where fire hydrants are subject to impact by a motor vehicle, guard posts or other *approved* means shall comply with Section 312. Any horizontal, lateral, or

diagonal elements that are a part of the protection for a fire hydrant shall not interfere with the ability to freely access and safely operate the hydrant.

SECTION 508

FIRE COMMAND CENTER

508.1 General. Where required by other sections of this code and in all buildings classified as high-rise buildings by the *International Building Code*, a *fire command center* for fire department operations shall be provided and shall comply with Sections 508.1.1 through 508.1.5.

508.1.1 Location and access. The location and accessibility of the *fire command center* shall be *approved* by the ((~~fire chief~~)) *fire code official*.

[W] 508.1.2 Separation. The *fire command center* shall be separated from the remainder of the building by not less than a ((~~1~~)) 2-hour *fire barrier* constructed in accordance with Section 707 of the *International Building Code* or *horizontal assembly* constructed in accordance with Section 711 of the *International Building Code*, or both.

* * *

508.1.5 Required features. The *fire command center* shall comply with NFPA 72 and shall contain the following features:

1. The emergency voice/alarm communication system control unit.
2. The fire department communications system.
3. Fire detection and alarm system annunciator.
4. Annunciator unit visually indicating the location of the elevators and whether they are operational.
5. Status indicators and controls for air distribution systems.

6. The fire-fighter's control panel required by Section 909.16 for smoke control systems installed in the building.

7. Controls for unlocking *stairway* doors simultaneously.

8. Sprinkler valve and water-flow detector display panels.

9. Emergency and standby power status indicators.

10. A telephone for fire department use with controlled access to the public telephone system.

11. Fire pump status indicators.

12.Schematic building plans indicating the typical floor plan and detailing the building core, *means of egress*, *fire protection systems*, fire-fighting equipment and fire department access, and the location of *fire walls*, *fire barriers*, *fire partitions*, *smoke barriers* and smoke partitions.

13.An *approved* Building Information Card that contains, but is not limited to, the following information:

13.1 General building information that includes: property name, address, the number of floors in the building (above and below grade), use and occupancy classification (for mixed uses, identify the different types of occupancies on each floor), estimated building population (i.e., day, night, weekend);

13.2 Building emergency contact information that includes: a list of the building's emergency contacts (e.g., building manager, building engineer, etc.) and their respective work phone number, cell phone number, and e-mail address;

13.3 Building construction information that includes: the type of building construction (e.g., floors, walls, columns, and roof assembly);

13.4 Exit stair information that includes: number of *exit stairs* in the building, each *exit stair* designation and floors served, location where each *exit stair* discharges, *exit stairs* that are

pressurized, *exit stairs* provided with emergency lighting, each *exit stair* that allows reentry, *exit stairs* providing roof access; elevator information that includes: number of elevator banks, elevator bank designation, elevator car numbers and respective floors that they serve, location of elevator machine rooms, location of sky lobby, location of freight elevator banks;

13.5 Building services and system information that includes: location of mechanical rooms, location of building management system, location and capacity of all fuel oil tanks, location of emergency generator, location of natural gas service;

13.6 *Fire protection system* information that includes: locations of standpipes, location of fire pump room, location of fire department connections, floors protected by *automatic sprinklers*, location of different types of *automatic sprinkler systems* installed (e.g., dry, wet, pre-action, etc.); and

13.7 Hazardous material information that includes: location of hazardous material, quantity of hazardous material.

14. Work table.

15. Generator supervision devices, manual start and ((~~transfer~~)) <u>stop</u> features.

16. Public address system, where specifically required by other sections of this code.

17. Elevator fire recall switch in accordance with ASME A17.1.

18. Elevator emergency or standby power selector switch(es), where emergency or <u>*legally required*</u> *standby power* is provided.

<u>19. On-site fire protection water tank fill valve control switch, tank level indicators, tank low level alarm, and tank fill signal.</u>

* * *

SECTION 510

EMERGENCY RESPONDER RADIO COVERAGE

510.1 Emergency responder radio coverage in new buildings. ((~~All new buildings shall have a~~)) *Approved* radio coverage for emergency responders shall be provided within ((~~the~~)) buildings meeting any of the following conditions:

1. High rise buildings;
2. The total building area is 50,000 square feet or more;
3. The total *basement* area is 10,000 square feet or more; or
4. There are floors used for human occupancy more than 30 feet below the finished floor of the lowest level of exit discharge.

The radio coverage system shall be installed in accordance with Sections 510.4 through 510.5.3 of this code and with the provisions of NFPA 72, National Fire Alarm and Signaling Code. ((~~based upon the existing coverage levels of the public safety communication systems of the jurisdiction at the exterior of the building.~~)) This section shall not require improvement of the existing public safety communication systems.

Exceptions:

1. ((~~Where approved by the building official and the fire code official, a wired communication system in accordance with Section 907.2.13.2 shall be permitted to be installed or maintained instead of an approved radio coverage system.~~))
2. ((~~Where it is determined by the *fire code official* that the radio coverage system is not needed.~~)) Buildings and areas of buildings that have minimum radio coverage signal strength levels of the King County Regional 800 MHz Radio System within the building in accordance with Section 510.4.1 without the use of a radio coverage system.

3. In facilities where emergency responder radio coverage is required and such systems, components or equipment required could have a negative impact on the normal operations of that facility, the *fire code official* shall have the authority to accept an automatically activated emergency responder radio coverage system.
4. One and two family dwellings and townhouses.

510.2 Emergency responder radio coverage in existing buildings. Existing buildings shall be provided with *approved* radio coverage for emergency responders as required in Chapter 11.

510.3 Permit required. A construction permit for the installation of or modification emergency responder radio coverage systems and related equipment is required as specified in Section 105.7.5. Maintenance performed in accordance with this code is not considered a modification and does not require a permit.

510.4 Technical requirements. Systems, components, and equipment required to provide emergency responder radio coverage systems shall comply with Sections 511.4.1 through 511.4.2.5.

510.4.1 Radio signal strength. The building shall be considered to have acceptable emergency responder radio coverage when signal strength measurements in ((~~95~~)) 90 percent of all areas on each floor of the building meet the signal strength requirements in Sections 510.4.1.1 and 510.4.1.2.

510.4.1.1 Minimum signal strength into the building. A minimum signal strength of -95 dBm shall be receivable within the building when transmitted from the King County Regional 800 MHz Radio System.

510.4.1.2 Minimum signal strength out of the building. A minimum signal strength of -95 dBm shall be received by the King County Regional 800 MHz Radio System ((~~agency's radio system~~)) when transmitted from within the building.

Exception: Critical areas, such as the *fire command center*(s), the fire pump room(s), *interior exit stairways*, *exit passageways*, elevator lobbies, standpipe cabinets, sprinkler sectional valve locations, and other areas required by the *fire code official*, shall be provided with 99 percent floor area radio coverage.

510.4.2 System design. The emergency responder radio coverage system shall be designed in accordance with Sections 510.4.2.1 through 510.4.2.5.

510.4.2.1 Amplification systems allowed. Buildings and structures which cannot support the required level of radio coverage shall be equipped with a radiating cable system, a distributed antenna system with Federal Communications Commission (FCC)-certified signal boosters, or other system allowed ((~~approved~~)) by the ((~~*fire code official*~~)) City of Seattle's Radio System Manager in order to achieve the required adequate radio coverage.

510.4.2.2 Technical criteria. The ((~~*fire code official*~~)) City of Seattle's Radio System Manager shall ((~~maintain a document providing the specific technical information and requirements for the emergency responder radio coverage system. This document shall contain, but not be limited to,~~)) provide the various frequencies required, the location of radio sites, effective radiated power of radio sites, and other supporting technical information upon request by the building owner or owner's representative.

510.4.2.3 ((~~Secondary~~)) Power supply sources. ((~~Emergency responder radio coverage systems shall be provided with an *approved* secondary source of power. The secondary power supply shall be capable of operating the emergency responder radio coverage system for a period of at~~

~~least 24 hours. When primary power is lost, the power supply to the emergency responder radio coverage system shall automatically transfer to the secondary power supply.~~)) Emergency responder radio coverage systems shall be provided with at least two independent and reliable power supply sources conforming to NFPA 72 and the Seattle Electrical Code, one primary and one secondary.

510.4.2.4 Signal booster requirements. If used, signal boosters shall meet the following requirements:

1. All signal booster components shall be contained in a National Electrical Manufacturer's Association (NEMA) 4-type or other *approved* enclosure.
2. Battery systems used for the emergency power source shall be contained in a NEMA 4-type waterproof cabinet.

Exception: Listed battery systems that are contained in integrated battery cabinets.

3. The signal booster system and ((~~battery system shall be electrically supervised and~~)) power supply(ies) shall include automatic supervisory and trouble signals that are monitored by a supervisory service and are annunciated by the fire alarm system in accordance with NFPA 72 ((~~, or when *approved* by the *fire code official*, shall sound an audible signal at a constantly attended location~~)).

Exception: For buildings without a fire alarm system, a dedicated monitoring panel in accordance with NFPA 72 shall be provided to annunciate automatic supervisory and trouble signals for the signal booster system and power supply(ies) and sound an audible signal at a constantly attended location.

4. Equipment shall have FCC certification prior to installation.

5. Unless otherwise approved by the City of Seattle's Radio System Manager, only channelized signal boosters shall be permitted.

510.4.2.5 Additional frequencies and change of frequencies. The emergency responder radio coverage system shall be capable of modification or expansion in the event frequency changes are required by the FCC or additional frequencies are made available by the FCC.

510.5 Installation requirements. The installation of the public safety radio coverage system shall be in accordance with Sections 510.5.1 through 510.5.4 ((~~5~~)).

510.5.1 Approval prior to installation. Amplification systems capable of operating on frequencies licensed to any public safety agency by the FCC shall not be installed without prior coordination and approval of the ((~~*fire code official*~~)) City of Seattle's Radio System Manager.

510.5. 2 Minimum qualifications of personnel. The minimum qualifications of the system designer and lead ((~~installation~~)) acceptance test personnel shall include:

1. A valid FCC-issued general radio operators license; and
2. Certification of in-building system training issued by or a certificate issued by the manufacturer of the equipment being installed.

((~~These qualifications shall not be required where demonstration of adequate skills and experience satisfactory to the *fire code official* is provided.~~))

510.5. 3 Acceptance test procedure and system certification. When an emergency responder radio coverage system is required, and upon completion of installation, the building *owner* shall have the radio system tested to ensure that two-way coverage on each floor of the building is ((~~a minimum of 90 percent~~)) in accordance with Section 510.4.1. The test procedure shall be conducted as follows

1. ((~~Each floor of the building shall be divided into a grid of 20 approximately equal test areas.~~)) Talk-back testing from a site to the King County Regional 800 MHz Radio System shall use Seattle Fire Department radio(s) and be witnessed by a representative of the Seattle Fire Department.

2. ((~~The test shall be conducted using a calibrated portable radio of the latest brand and model used by the agency talking through the agency's radio communications system.~~)) Each floor of the building shall be divided into a grid of 20 approximately equal test areas.

3. ((~~Failure of a maximum of two nonadjacent test areas shall not result in failure of the test.~~)) A test location approximately in the center of each test area shall be selected for the test, with the radio enabled to verify two-way communications to and from the outside of the building through the King County Regional 800 MHz Radio System. Once the test location has been selected, that location shall represent the entire test area. Failure in the selected test location shall be considered failure of that test area.

4. ((~~In the event that three of the test areas fail the test, in order to be more statistically accurate, the floor shall be permitted to be divided into 40 equal test areas. Failure of a maximum of four nonadjacent test areas shall not result in failure of the test. If the system fails the 40-area test, the system shall be altered to meet the 90 percent coverage requirement.~~)) The test for emergency responder radio coverage will be considered passed when 90% of the test locations on each floor are able to pass two-way communications to and from the outside of the building.

Exception: Critical areas shall be provided with 99 percent floor area radio coverage.

5. ((~~A test location approximately in the center of each test area shall be selected for the test, with the radio enabled to verify two-way communications to and from the outside of the building~~

~~through the public agency's radio communications system. Once the test location has been selected, that location shall represent the entire test area. Failure in the selected test location shall be considered failure of that test area. Additional test locations shall not be permitted.~~)) In the event that three of the test areas on a floor fail the talk back test, in order to be more statistically accurate, the floor shall be permitted to be divided into 40 equal test areas. If the system fails the 90% coverage requirement for the 40-area test, the emergency responder radio system shall be altered to meet the 90 percent coverage requirement.

Exception: Critical areas shall be provided with 99 percent floor area coverage.

6. The gain values/output levels of all amplifiers shall be measured and the test measurement results shall be kept on file with the building *owner* so that the measurements can be verified during annual tests. In the event that the measurement results become lost, the building owner shall be required to rerun the acceptance test to reestablish the gain values.

7. As part of the installation a spectrum analyzer or other suitable test equipment shall be utilized to ensure spurious oscillations are not being generated by the subject signal booster. This test shall be conducted at time of installation and subsequent annual inspections.

8. Prior to issuance of the building Certificate of Occupancy, the building owner or owner's representative shall provide the Seattle Fire Department with a certification letter stating that the emergency responder radio coverage system has been installed and tested in accordance with Sections 510.4 and 510.5, and that the system is complete and fully functional. A system acceptance test report shall be submitted to the City of Seattle's Radio System Manager, maintained on the premises and be made available to the fire department upon request. The report shall verify compliance with Section 510.5.4, and include the emergency responder

radio coverage system equipment data sheets, diagram showing device locations and wiring schematic, and a copy of the electrical permit and system certification letter.

510.5.4 FCC compliance. The emergency responder radio coverage system installation and components shall also comply with all applicable federal regulations including, but not limited to, FCC 47 CFR Part 90.219.

510.6 Maintenance. The emergency responder radio coverage system shall be maintained operational at all times in accordance with Sections 510.6.1 through 510.6.((~~3~~))5.

510.6.1 Testing and proof of compliance. The emergency responder radio coverage system shall be inspected and tested annually or whenever structural changes occur including additions or remodels that could materially change the original field performance tests. Testing shall consist of the following:

1. In-building coverage test as described in Section 510.5.4.
2. Signal boosters shall be tested to ensure that the gain/output level is the same as it was upon initial installation and acceptance.
3. Backup batteries and power supplies shall be tested under load of a period of one hour to verify that they will properly operate during an actual power outage. If within the 1-hour test period the battery exhibits symptoms of failure, the test shall be extended for additional 1-hour periods until the integrity of the battery can be determined.
4. All other active components shall be checked to verify operation within the manufacturer's specifications.
5. At the conclusion of the testing, a report, which shall verify compliance with Sections 510.5.4 and 510.6 shall be ((~~submitted to the *fire code official*~~)) maintained on the premises and be made available to the fire department upon request.

510.6.2 Additional frequencies. The building *owner* shall modify or expand the emergency responder radio coverage system at their expense in the event frequency changes are required by the FCC or additional frequencies are made available by the FCC. Prior approval of a public safety radio coverage system on previous frequencies does not exempt this section.

510.6.3 Field testing. ((~~Agency~~)) Seattle Fire Department personnel shall have the right to enter onto the property at any reasonable time to conduct field testing to verify the required level of radio coverage.

510.6.4 Qualifications of testing personnel. All tests shall be documented and signed by a person in possession of a current FCC General Radiotelephone Operator license, or a current technician certification issued by a nationally recognized organization, school or a certificate issued by the manufacturer of the equipment being installed.

510.6.5 Continuing operation/supervision. The occurrence of any fault in an emergency responder radio coverage system where the system function is decreased shall result in the transmission of a supervisory signal to a supervisory service. Systems that are out-of-service for more than 8 hours require notification to the *fire code official.*

Section 8. Chapter 6 of the 2015 International Fire Code is amended as follows:

CHAPTER 6

BUILDING SERVICES AND SYSTEMS

SECTION 601

GENERAL

601.1 Scope. The provisions of this chapter shall apply to the installation, operation and maintenance of fuel-fired appliances and heating systems, emergency power systems and *legally*

required standby power systems, electrical systems and equipment, mechanical refrigeration systems, elevator recall, stationary storage battery systems and commercial kitchen equipment.

601.2 Permits. Permits shall be obtained for refrigeration systems, battery systems, fuel tanks connected to emergency and *legally required standby power systems,* and solar photovoltaic power systems as set forth in Sections 105.6 and 105.7.

* * *

SECTION 603

FUEL-FIRED APPLIANCES

* * *

[W] 603.4 Portable unvented heaters. Portable unvented fuel-fired heating equipment shall be prohibited in occupancies in Groups A, E, I, R-1, R-2, and R-3((~~and R-4~~)).

Exceptions:

1. *Listed* and *approved* unvented fuel-fired heaters, including portable outdoor gas-fired heating appliances, in one- and two-family *dwellings*.
2. Portable outdoor gas-fired heating appliances shall be allowed in accordance with Section 603.4.2.

* * *

603.4.2.3.4 Indoor storage prohibited. Gas containers shall ((~~not~~)) be stored ((~~inside~~)) outside of buildings ((~~except~~)) in accordance with the provisions of Sections 6109.12 through 6109.15 ((~~Section 6109.9~~)).

* * *

SECTION 604

EMERGENCY AND LEGALLY REQUIRED STANDBY POWER SYSTEMS

* * *

604.1 General. Emergency power systems and legally required standby power systems required by this code or the *International Building Code* shall comply with Sections 604.1.1 through 604.1.8.

604.1.1 Stationary generators. Stationary emergency and legally required standby power generators required by this code shall be *listed* in accordance with UL 2200.

604.1.2 Installation. Emergency power systems and legally required standby power systems shall be installed in accordance with the *International Building Code,* NFPA 70, NFPA 110 and NFPA 111.

604.1.3 Load transfer. Emergency power systems shall automatically provide secondary power within 10 seconds after primary power is lost, unless specified otherwise in this code. Legally required ((~~S~~)) standby power systems shall automatically provide secondary power within 60 seconds after primary power is lost unless specified otherwise in this code.

604.1.4 Load duration. Emergency power systems and legally required standby power systems shall be designed to provide the required power for a minimum duration of 2 hours without being refueled or recharged, unless specified otherwise in this code.

604.1.5 Uninterruptable power source. An uninterrupted source of power shall be provided for equipment where required by the manufacturer's instructions, the listing, this code or applicable referenced standards.

604.1.6 Interchangeability. Emergency power systems shall be an acceptable alternative for installations that require legally required standby power systems.

604.1.7 Group I-2 occupancies. In Group I-2 occupancies, where an essential electrical system is located in flood hazard areas established in Section 1612.3 of the *International Building Code*

and where new or replacement essential electrical system generators are installed, the system shall be located and installed in accordance with ASCE 24.

604.1.8 Maintenance. Existing installations shall be maintained in accordance with the original approval and Section 604.4.

604.2 Where required. Emergency and *legally required standby power systems* shall be provided where required by Sections 604.2.1 through 604.2.16.

604.2.1 Elevators and platform lifts. ((~~Standby~~)) Emergency power shall be provided for elevators and platform lifts as required in Sections 607.2, 1009.4, and 1009.5.

604.2.2 Emergency alarm systems. Emergency power shall be provided for emergency alarm systems as required by Section 414 of the *International Building Code*.

604.2.3 Emergency responder radio coverage systems. Legally required ((~~S~~) standby power shall be provided for emergency responder radio coverage systems as required in Section 510.4.2.3. The standby power supply shall be capable of operating the emergency responder radio coverage system for a duration of not less than 24 hours.

604.2.4 Emergency voice/alarm communication systems. Emergency power shall be provided for emergency voice/alarm communication systems as required in Section 907.5.2.2.5. The system shall be capable of powering the required load for a duration of not less than 24 hours, as required in NFPA 72.

604.2.5 Exit signs. Emergency power shall be provided for *exit* signs as required in Section 1013.6.3. The system shall be capable of powering the required load for a duration of not less than 90 minutes.

604.2.6 Group I-2 occupancies. Essential electrical systems for Group I-2 occupancies shall be in accordance with Section 407.10 of the *International Building Code*.

604.2.7 Group I-3 occupancies. Power-operated sliding doors or power-operated locks for swinging doors in Group I-3 occupancies shall be operable by a manual release mechanism at the door. ((~~Emergency~~)) Legally required power shall be provided for the doors and locks in accordance with Section 604.

Exceptions:

1. ((~~Emergency~~)) Legally required power is not required in facilities where provisions for remote locking and unlocking of occupied rooms in Occupancy Condition 4 are not required as set forth in the *International Building Code*.

2. ((~~Emergency~~)) Legally required power is not required where remote mechanical operating releases are provided.

604.2.8 Hazardous materials. ((~~Emergency and~~)) Legally required standby power shall be provided in occupancies with hazardous materials as required in the following sections:

1. Sections 5004.7 and 5005.1.5 for hazardous materials.
2. Sections 6004.2.2.8 and 6004.3.4.2 for highly toxic and toxic gases.
3. Section 6204.1.11 for organic peroxides.

604.2.9 High-rise buildings. ((~~Standby power and e~~)) Emergency power shall be provided for high-rise buildings as required in Section 403 of the *International Building Code*, and shall be in accordance with Section 604.

604.2.10 Horizontal sliding doors. Legally required ((~~S~~)) standby power shall be provided for horizontal sliding doors as required in Section 1010.1.4.3. The standby power supply shall have a capacity to operate not fewer than 50 closing cycles of the door.

604.2.11 Hydrogen fuel gas rooms. Legally required ((~~S~~)) standby power shall be provided for hydrogen fuel gas rooms as required by Section 5808.7.

604.2.12 Means of egress illumination. Emergency power shall be provided for *means of egress* illumination in accordance with Sections 1008.3 and 1104.5.1.

604.2.13 Membrane structures. Legally required ((~~S~~)) standby power shall be provided for auxiliary inflation systems in permanent membrane structures in accordance with Section 2702 of the *International Building Code*. Auxiliary inflation systems shall be provided in temporary air-supported and air inflated membrane structures in accordance with Section 3103.10.4.

604.2.14 Semiconductor fabrication facilities. Emergency power shall be provided for semiconductor fabrication facilities as required in Section 2703.15.

604.2.15 Smoke control systems. ((~~Standby~~)) Emergency power shall be provided for smoke control systems as required in Section 909.11.

Exception: *Legally required standby power* is acceptable for shaft pressurization systems in low-rise buildings.

604.2.16 Underground buildings. Emergency ((~~and standby~~)) power shall be provided in underground buildings as required in Section 405 of the *International Building Code* and shall be in accordance with Section 604.

* * *

604.4 Maintenance. Emergency and *legally required standby power* systems shall be maintained in accordance with NFPA 110 and NFPA 111 such that the system is capable of supplying service within the time specified for the type and duration required.

604.4.1 Schedule. Inspection, testing and maintenance of emergency and *legally required standby power* systems shall be in accordance with an *approved* schedule established upon completion and approval of the system installation.

604.4.2 Records. Records of the inspection, testing and maintenance of emergency and *legally required standby power* systems shall include the date of service, name of the servicing technician, a summary of conditions noted and a detailed description of any conditions requiring correction and what corrective action was taken. Such records shall be maintained and shall be submitted to the *fire code official* in accordance with Administrative Rule 9.02.14, *Inspecting, Testing, and Maintenance Requirements for Fire Protection Systems* and any future revisions of this rule adopted by the *fire code official*.

604.4.3 Switch maintenance. Emergency and *legally required standby power* system transfer switches shall be included in the inspection, testing and maintenance schedule required by Section 604.3.1. Transfer switches shall be maintained free from accumulated dust and dirt. Inspection shall include examination of the transfer switch contacts for evidence of deterioration. When evidence of contact deterioration is detected, the contacts shall be replaced in accordance with the transfer switch manufacturer's instructions.

604.5 Operational inspection and testing. Emergency and *legally required standby* power systems, including all appurtenant components shall be inspected and tested under load in accordance with NFPA 110 and NFPA 111.

Exception: Where the emergency or legally required standby power system is used for *standby power* or peak load shaving, such use shall be recorded and shall be allowed to be substituted for scheduled testing of the generator set, provided that appropriate records are maintained.

* * *

SECTION 605

ELECTRICAL EQUIPMENT, WIRING AND HAZARDS

* * *

[W] 605.11 Solar photovoltaic power systems. Installation, modification, or alteration of solar photovoltaic power systems shall comply with this section. Due to the emerging technologies in the solar photovoltaic industry, it is understood fire code officials may need to amend prescriptive requirements of this section to meet the requirements for firefighter access and product installations. Section 104.9, Alternative materials and methods, of this code shall be considered when approving the installation of solar photovoltaic power systems. Solar photovoltaic power systems shall be installed in accordance with Sections 605.11.1 through 605.11.2, the *International Building Code* ((~~or *International Residential Code*~~)) and NFPA 70.

Exception: Detached, nonhabitable Group U structures shall not be subject to the requirements of Sections 605.11.2 through 605.11.3.3.3.

* * *

[W] 605.11.1.2 Solar photovoltaic systems for Group R-3 buildings. Solar photovoltaic systems for Group R-3 buildings shall comply with Sections 605.11.1.2.1 through 605.11.1.2.5.

Exceptions: ((~~These requirements shall not apply to structures designed and constructed in accordance with the *International Residential Code*.~~))

1. Residential dwellings with an approved automatic fire sprinkler system installed.
2. Residential dwellings with an approved mechanical or passive ventilation system.
3. Where the *fire code official* determines that the slope of the roof is too steep for emergency access.
4. Where *the fire code official* determines that vertical ventilation tactics will not be utilized.
5. These requirements do not apply to roofs where the total combined area of the solar array does not exceed thirty-three percent as measured in plan view of the total roof area of the structure,

where the solar array will measure 1,000 sq. ft. or less in area, and where a minimum eighteen inches unobstructed pathway shall be maintained along each side of any horizontal ridge.

605.11.1.2.1 Size of solar photovoltaic array. Each photovoltaic array shall be limited to 150 feet (45720 mm) by 150 feet (45 720 mm). Multiple arrays shall be separated by a 3-foot-wide (914 mm) clear access pathway.

[W] 605.11.1.2.2 Hip roof layouts. Panels and modules installed on Group R-3 buildings with hip roof layouts shall be located in a manner that provides a ((~~3-foot-wide (914 mm)~~)) 18 inches clear access pathway from the eave to the ridge on each roof slope where panels and modules are located. The access pathway shall be at a location on the building capable of supporting the fire fighters accessing the roof.

Exception: These requirements shall not apply to roofs with slopes of two units vertical in 12 units horizontal (2:12) or less.

* * *

[W] 605.11.1.2.5 Allowance for smoke ventilation operations. Panels and modules installed on Group R-3 buildings shall be located not less than ((~~3 feet (914 mm)~~)) 18 inches from the ridge in order to allow for fire department smoke ventilation operations.

Exception: Panels and modules shall be permitted to be located up to the roof ridge where an alternative ventilation method *approved* by the fire chief has been provided or where the fire chief has determined vertical ventilation techniques will not be employed.

* * *

[W] 605.11.2 Ground-mounted photovoltaic arrays. Ground-mounted photovoltaic arrays shall comply with Sections 605.11 through 605.11.2 and this section. Setback requirements shall

not apply to ground-mounted, free-standing photovoltaic arrays. ((~~A clear, brush-free area of 10 feet (3048 mm) shall be required for ground- mounted photovoltaic arrays.~~))

* * *

SECTION 606

MECHANICAL REFRIGERATION

* * *

606.8 Refrigerant ((~~detector~~)) <u>detection system</u>. Machinery rooms shall contain a refrigerant ((~~detector~~)) <u>detection system</u> with an audible and visual alarm. The detector, or a sampling tube that draws air to the detector, shall be located in an area where refrigerant from a leak will concentrate. The alarm shall be actuated at a value not greater than the corresponding TLV-TWA values shown in the ((~~*International*~~)) <u>*Seattle*</u> *Mechanical Code* for the refrigerant classification. Detectors and alarms shall be placed in *approved* locations. The detectors shall transmit a signal to an approved location.

* * *

<u>**606.17 Standby power.** Where mechanical ventilation, treatment systems, temperature control, alarm, detection or other electrically operated systems are required, such systems shall be provided with legally required standby power.</u>

<u>**Exception:** Legally required standby power is not required where an approved fail-safe engineered system is installed.</u>

SECTION 607

ELEVATOR OPERATION,

MAINTENANCE AND FIRE SERVICE KEYS

607.1 Emergency operation. Existing elevators with a travel distance of 25 feet (7620 mm) or more shall comply with the requirements in Chapter 46. New elevators shall be provided with Phase I emergency recall operation and Phase II emergency in-car operation in accordance with ASME A17.1 and Seattle Building Code.

* * *

607.7 Elevator key location. Keys for the elevator car doors and fire-fighter service keys shall be kept in an ((~~*approved* location for immediate use by the fire department.~~)) elevator key box in accordance with Section 506.1.2.

607.8 Standardized fire service elevator keys. Buildings with elevators equipped with Phase I emergency recall, Phase II emergency in-car operation, or a fire service access elevator shall be equipped to operate with a standardized fire service elevator key *approved* by the *fire code official*.

((~~**Exception:** The owner shall be permitted to place the building's nonstandardized fire service elevator keys in a key box installed in accordance with Section 506.1.2.~~))

* * *

SECTION 608

STATIONARY STORAGE BATTERY SYSTEMS

608.1 Scope. Stationary storage battery systems having an electrolyte capacity of more than 50 gallons (189 L) for flooded lead-acid, nickel cadmium (Ni-Cd) and valve-regulated lead-acid VRLA, or 1,000 pounds (454 kg) for lithium-ion and lithium metal polymer, used for facility

legally required standby power, emergency power or uninterrupted power supplies shall comply with this section and Table 608.1.

* * *

SECTION 609

COMMERCIAL KITCHEN HOODS

* * *

[W] **609.3 Operations and maintenance.** Commercial cooking systems shall be operated and maintained in accordance with Sections 609.3.1 through 609.3.4 and Chapter 11 of NFPA 96.

* * *

Section 9. Chapter 8 of the 2015 International Fire Code is amended as follows:

CHAPTER 8

INTERIOR FINISH, DECORATIVE MATERIALS AND FURNISHINGS

* * *

SECTION 806

DECORATIVE VEGETATION IN NEW AND EXISTING BUILDINGS

* * *

[W] **806.1.1 Restricted occupancies.** Natural cut trees shall be prohibited within ambulatory care facilities and Group ((~~A, E,~~)) I-1, I-2, I-3, I-4, ((~~M, R-1,~~)) and R-2 ((~~and R-4~~)) occupancies((~~.~~)) providing licensed care to clients in one of the categories listed in Section 310.1 of the *International Building Code* licensed by Washington state.

((~~**Exceptions:**~~

~~1. Trees located in areas protected by an approved automatic sprinkler system installed in accordance with Section 903.3.1.1 or 903.3.1.2 shall not be prohibited in Groups A, E, M, R-1 and R-2.~~

~~2. Trees shall be allowed within dwelling units in Group R-2 occupancies.~~))

[W] **806.1.2 Support devices.** The support device that holds the tree in an upright position shall be of a type that is stable and that meets all of the following criteria:

1. The device shall hold the tree securely and be of adequate size to avoid tipping over of the tree.
2. The device shall be capable of containing a minimum ((~~two-day~~)) supply of water in accordance with Table 806.1.2.
3. The water level, when full, shall cover the tree stem at least 2 inches (51 mm). The water level shall be maintained above the fresh cut and checked at least once daily.

[W] TABLE 806.1.2

SUPPORT STAND WATER CAPACITY

TREE STEM DIAMETER (inches)	MINIMUM SUPPORT STAND WATER CAPACITY (gallons)	TYPICAL DAILY WATER EVAPORATION AMOUNT (gallons)
Up to 4	1	1/4 to 1
4 to 6	1 1/2	1 1/4 to 1 1/2
7 to 8	2	1 3/4 to 2
9 to 12	3	2 1/4 to 3
13 and over	4	Over 3

* * *

SECTION 807

DECORATIVE MATERIALS OTHER THAN DECORATIVE VEGETATION IN NEW AND EXISTING BUILDINGS

* * *

807.4 Acceptance criteria and reports. Where required to exhibit improved fire performance, curtains, draperies, fabric hangings and other similar combustible material shall be tested by an approved agency and meet the flame propagation performance criteria of Test Method 1 or Test Method 2, of NFPA 701 <u>or other approved standard</u>, exhibit a maximum rate of heat release of 100 kW when tested in accordance with NFPA 289, using the 20 kW ignition source. Reports of test results shall be prepared in accordance with the test method and furnished to the fire code official upon request.

<u>807.4 Point of Information</u>

<u>Acceptable flame certificates for decorative materials include:</u>

<u>1. Certificates indicating compliance with NFPA 701.</u>

<u>2. Certificates verifying approval through the California State Fire Marshal.</u>

<u>3. Certificates indicating compliance with CPAI-84 (*Canvas Products Association International*).</u>

* * *

Section 10. Chapter 9 of the 2015 International Fire Code is amended as follows:

CHAPTER 9

FIRE PROTECTION SYSTEMS

SECTION 901

GENERAL

* * *

901.4.7 Certification. Individuals who install, inspect, test or maintain *fire protection systems* or portable fire extinguishers shall obtain the proper certificate from the *fire code official* in accordance with Administrative Rule 9.01.15, *Certification for Installing, Maintaining and Testing Life Safety Systems and Equipment* and any future revisions of this rule adopted by the fire code official.

[W] In addition for fire alarm systems, all installation, inspecting, testing, maintenance, and programming not defined as "Electrical Work" by chapter 19.28 RCW shall be completed by a NICET II in fire alarms (effective July 1, 2017).

* * *

901.5.1 Occupancy. It shall be unlawful to occupy any portion of a building or structure until the systems required ((~~fire detection, alarm and suppression systems~~)) by this code or the Seattle Building Code have been tested and *approved.*

901.5.1 Point of Information

For additional details see Administrative Rule 9.07.07, Partial / Phased Occupancy, Occupancy during Construction and Temporary Certificates of Occupancy and any future revisions of this rule adopted by the fire code official.

901.6 Inspection, testing and maintenance. Fire detection, alarm and extinguishing systems, mechanical smoke exhaust systems, fire standpipe systems, fire pump systems, and smoke and heat vents shall be maintained in an operative condition at all times, and shall be replaced or repaired where defective. Nonrequired *fire protection systems* and equipment shall be inspected, tested and maintained or removed when approved by the *fire code official.*

901.6.1 Standards. *Fire protection systems* shall be inspected, tested and maintained in accordance with the Administrative Rule 9.02.14 *Inspection, Testing and Maintenance*

Requirements for Fire Protection Systems and any future revisions of this rule adopted by the *fire code official* and also in accordance with the referenced standards *listed* in Table 901.6.1.

901.6.2 Records. Records of all system inspections, tests and maintenance required by the referenced standards shall be maintained with copies available to the *fire code official* upon request.

* * *

901.7 Systems out of service. Where a ((~~required~~)) *fire protection system* is out of service, the procedures detailed in Administrative Rule 9.04.14, *Impaired Fire Protection Systems* and any future revisions of this rule adopted by the *fire code official* shall be implemented. ((~~the fire department and the *fire code official* shall be notified immediately and, where required by the *fire code official*, the building shall either be evacuated or an *approved* fire watch shall be provided for all occupants left unprotected by the shutdown until the *fire protection system* has been returned to service.~~

~~Where utilized, fire watches shall be provided with at least one *approved* means for notification of the fire department and their only duty shall be to perform constant patrols of the protected premises and keep watch for fires.~~))

* * *

901.8.2 Removal of existing occupant-use hose lines. The *fire code official* is authorized to permit the removal of existing occupant-use hose lines where all of the following conditions exist:

1. The floor with the hose lines is equipped throughout with an automatic sprinkler system ((~~Installation is not required by this code or the *International Building Code*.~~))

2. The hose line would not be utilized by trained personnel or the fire department.

3. The ((~~remaining~~)) building is provided with a class I standpipe system having outlets ((~~are~~)) compatible with local fire department fittings.

* * *

901.9 Termination of monitoring service. For fire alarm systems required to be monitored by this code, notice shall be made to the *fire code official* whenever alarm monitoring services are terminated. Notice shall be made in writing, to the *fire code official* by the monitoring service provider being terminated.

901.9. Point of Information
Termination of monitoring service only applies when monitoring contracts expire, or are cancelled

* * *

901.11 Cabinets. Cabinets containing fire-fighting equipment, such as standpipes, fire hose, fire extinguishers or fire department valves, shall not be blocked from use or obscured from view.

901.11.1 Cabinet equipment identification. Cabinets shall be identified in an *approved* manner by a permanently attached sign with letters not less than 2 inches (51 mm) high in a color that contrasts with the background color, indicating the equipment contained therein.

Exceptions:

1. Doors not large enough to accommodate a written sign shall be marked with a permanently attached pictogram of the equipment contained therein.
2. Doors that have either an *approved* visual identification clear glass panel or a complete glass door panel.

901.11.2 Locking cabinet doors. Cabinets shall be unlocked.

Exceptions:

1. Visual identification panels of glass or other *approved* transparent frangible material that is easily broken and allows access.

2. *Approved* locking arrangements.

3. Group I-3 occupancies.

* * *

SECTION 902

DEFINITIONS

* * *

[B] FIRE AREA.
FIRE DETECTION SYSTEM.
FIRE DETECTOR, AUTOMATIC.

* * *

INITIATING DEVICE.
REPAIR GARAGE.
Major Repair Garage.
Minor Repair Garage.
MANUAL FIRE ALARM BOX.

* * *

PRIVATE GARAGE
PORTABLE SCHOOL CLASSROOM.
RECORD DRAWINGS.

* * *

SECTION 903

AUTOMATIC SPRINKLER SYSTEMS

* * *

903.2.1.2 Group A-2. An *automatic sprinkler system* shall be provided for Group A-2 occupancies where one of the following conditions exists:

1. The *fire area* exceeds 5,000 square feet (464m2).

2. The *fire area* has an *occupant load* of 100 or more.

3. The *fire area* is located on a floor other than a *level of exit discharge* serving such occupancies.

Exception: Item 3 above does not apply to fire areas that include space located one floor above the level of exit discharge if the occupant load of the upper floor is less than 50.

* * *

[W] 903.2.1.6 Assembly occupancies on roofs. Where an occupied roof has an assembly occupancy with an *occupant load* exceeding 100 for Group A-2 and 300 for other Group A occupancies, ((~~all floors between the occupied roof and the *level of exit discharge*~~)) the building shall be equipped with an *automatic sprinkler system* in accordance with Section 903.3.1.1 or 903.3.1.2.

* * *

903.2.1.8 Nightclub. An automatic sprinkler system shall be provided throughout Group A-2 nightclubs as defined in this code.

* * *

[W] 903.2.3 Group E. An *automatic sprinkler system* shall be provided for fire areas containing Group E occupancies where the fire area has an occupant load of 51 or more, calculated in accordance with Table 1004.1.2. ((~~as follows:~~

~~1. Throughout all Group E *fire areas* greater than 12,000 square feet (1115 m2) in area.~~

~~2. Throughout every portion of educational buildings below the lowest *level of exit discharge* serving that portion of the building.~~

~~**Exception:** An *automatic sprinkler system* is not required in any area below the lowest *level of exit discharge* serving that area where every classroom throughout the building has at least one exterior *exit* door at ground level.~~))

Exceptions:

1. Portable school classrooms with an *occupant load* of 50 or less calculated in accordance with Table 1004.1.2, provided that the aggregate area of any cluster of portable school classrooms does not exceed 6,000 square feet (1465 m^2); and clusters of portable school classrooms shall be separated as required by the *Seattle Building Code*; or
2. Portable school classrooms with an occupant load from 51 through 98, calculated in accordance with Table 1004.1.2, and provided with two means of direct independent exterior egress from each classroom in accordance with Ch. 10, and one exit from each classroom shall be accessible, provided that the aggregate area of any cluster of portable classrooms does not exceed 6,000 square feet (557 m2), and clusters of portable school classrooms shall be separated as required by the building code; or
3. Fire areas containing day care and preschool facilities with a total occupant load of 100 or less located at the level of exit discharge where every room in which care is provided has not fewer than one exit discharge door.

* * *

[W] 903.2.6 Group I. An automatic sprinkler system shall be provided throughout buildings with a Group I fire area.

Exceptions:

1. An *automatic sprinkler system* installed in accordance with Section 903.3.1.2 shall be permitted in Group I-1 condition 1facilities.

~~2.~~ ((~~An *automatic sprinkler system* is not required where in Group I-4 day care facilities are at the *level of exit discharge* and where every room where care is provided has not fewer than one exterior *exit* door.~~

3. ~~In buildings where Group I-4 day care is provided on levels other than the *level of exit discharge*, an *automatic sprinkler system* in accordance with Section 903.3.1.1 shall be installed on the entire floor where care is provided, all floors between the level of care and the *level of exit discharge*, and all floors below the *level of exit discharge*, other than areas classified as an open parking garage.~~))

4. Where new construction or additions house less than sixteen persons receiving care, an automatic sprinkler system installed in accordance with Section 903.2.8.3 shall be permitted for Group I-1, condition 2, assisted living facilities licensed under chapter 388-78A WAC and residential treatment facilities licensed under chapter 246-337 WAC.

[W] 903.2.6.1 Group I-4. An automatic sprinkler system shall be provided in fire areas containing Group I-4 occupancies where the fire area has an occupant load of 51 or more, calculated in accordance with Table 1004.1.2.

Exceptions:

1. An automatic sprinkler system is not required where Group I-4 day care facilities with a total occupant load of 100 or less, and located at the level of exit discharge and where every room where care is provided has not fewer than one exterior exit door.
2. In buildings where Group I-4 day care is provide on levels other than the level of exit discharge, an automatic sprinkler system in accordance with Section 903.3.1.1 shall be installed on the entire floor where care is provided, all floors between the level of care and

the level of exit discharge and all floors below the level of exit discharge other than areas classified as an open parking garage.

* * *

903.2.8 Group R. An *automatic sprinkler system* installed in accordance with Section 903.3 shall be provided throughout all buildings with a Group R *fire area*.

[W] Exception: Group R-1 if all of the following conditions apply:

1. The Group R *fire area* is no more than 500 square feet and is used for recreational use only.
2. The Group R *fire area* is on only one story.
3. The Group R *fire area* does not include a basement.
4. The Group R *fire area* is no closer than 30 feet from another structure.
5. Cooking is not allowed within the Group R *fire area*.
6. The Group R *fire area* has an *occupant load* of no more than 8.
7. A hand-held (portable) fire extinguisher is in every Group R *fire area*.

903.2.8.1 Group R-3. An *automatic sprinkler system* installed in accordance with Section 903.3.1.3 shall be permitted in Group R-3 occupancies.

[W][F] ((~~903.2.8.2 Group R-4 Condition 1.~~ ~~An *automatic sprinkler system* installed in accordance with Section 903.3.1.3 shall be permitted in Group R-4 Condition 1 occupancies.~~

~~**[F] 903.2.8.3 Group R-4 Condition 2.** An *automatic sprinkler system* installed in accordance with Section 903.3.1.2 shall be permitted in Group R-4 Condition 2 occupancies. Attics shall be protected in accordance with Section 903.2.8.3.1 or 903.2.8.3.2.~~

~~**[F] 903.2.8.3.1 Attics used for living purposes, storage or fuel-fired equipment.** Attics used for living purposes, storage or fuel-fired equipment shall be protected throughout with an *automatic sprinkler system* installed in accordance with Section 903.3.1.2.~~

~~**[F] 903.2.8.3.2 Attics not used for living purposes, storage or fuel-fired equipment.** Attics not used for living purposes, storage or fuel-fired equipment shall be protected in accordance with one of the following:~~

~~1. Attics protected throughout by a heat detector system arranged to activate the building fire alarm system in accordance with Section 907.2.10.~~

~~2. Attics constructed of noncombustible materials.~~

~~3. Attics constructed of fire-retardant-treated wood framing complying with Section 2303.2 of the *International Building Code*.~~

~~4. The *automatic sprinkler system* shall be extended to provide protection throughout the attic space.~~))

* * *

903.2.9.1 <u>Major</u> Repair garages. An *automatic sprinkler system* shall be provided throughout all buildings used as <u>major</u> repair garages in accordance with Section 406.8 of the *International Building Code*, as shown:

1. Buildings having two or more stories above *grade plane*, including *basements*, with a *fire area* containing a <u>*major*</u> *repair garage* exceeding 10,000 square feet (929 m2).
2. Buildings no more than one story above *grade plane*, with a *fire area* containing a <u>*major*</u> *repair garage* exceeding 12,000 square feet (1115 m2).
3. Buildings with <u>*major*</u> repair garages servicing vehicles parked in *basements*.
4. A Group S-1 *fire area* used for the <u>major</u> repair of commercial motor vehicles where the *fire area* exceeds 5,000 square feet (464 m2).

* * *

903.2.11.1.3 Basements. Where any portion of a *basement* is located more than 75 feet (22 860 mm) from openings required by Section 903.2.11.1, ((~~or where walls, partitions or other obstructions are installed that restrict the application of water from hose streams,~~)) the *basement* shall be equipped throughout with an *approved automatic sprinkler system*.

* * *

[W] 903.2.11.7 Relocatable buildings within buildings. Relocatable buildings or structures located within a building with an approved fire sprinkler systems shall be provided with fire sprinkler protection within the occupiable space of the building and the space underneath the relocatable building.

Exceptions:

1. Sprinkler protection is not required underneath the building when the space is separated from the adjacent space by construction resisting the passage of smoke and heat and combustible storage will not be located there.
2. If the building or structure does not have a roof or ceiling obstructing the overhead sprinklers.
3. Construction trailers and temporary offices used during new building construction prior to occupancy.
4. Movable shopping mall kiosks with a roof or canopy dimension of less than 4 feet on the smallest side.

* * *

903.3.1 Standards. Sprinkler systems shall be designed and installed in accordance with Section 903.3.1.1, 903.3.1.2 or 903.3.1.3, Administrative Rule 9.03.14, *Automatic Sprinkler and*

Standpipe Systems, and any future revisions of this rule adopted by the *fire code official*, and other chapters of this code, as applicable.

* * *

903.3.1.1.1 Exempt locations. Automatic sprinklers shall not be required in the following rooms or areas where such rooms or areas are protected with an *approved* automatic fire detection system in accordance with Section 907.2 that will respond to visible or invisible particles of combustion. Sprinklers shall not be omitted from any room merely because it is damp, of fire-resistance rated construction or contains electrical equipment.

1. Any room where the application of water, or flame and water, constitutes a serious life or fire hazard, if *approved* by the *fire code official*.
2. Any room or space where sprinklers are considered undesirable because of the nature of the contents, when *approved* by the *fire code official*.
3. ((~~Generator and t~~)) Transformer vaults((~~rooms~~)) separated from the remainder of the building by walls and floor/ceiling or roof/ceiling assemblies having a *fire-resistance rating* of not less than ((~~2~~)) 3 hours.
4. Rooms or areas that are of noncombustible construction with wholly noncombustible contents.
5. ((~~Fire service access elevator machine rooms and machinery spaces.~~)) Machine rooms, machinery spaces, control rooms, and control spaces in accordance with Seattle Fire Department Administrative Rule 9.06.14, *Sprinkler Systems and Fire Alarms for Elevator Machinery Rooms, Hoist Ways and Pits* and any future revisions of this rule adopted by the *fire code official*.

((~~6. Machine rooms and machinery spaces associated with occupant evacuation elevators designed in accordance with Section 3008 of the *International Building Code*.~~))

* * *

903.3.1.2.1 Balconies and decks. Sprinkler protection shall be provided for exterior balconies, decks and ground floor patios of *dwelling units* and *sleeping units* in accordance with Seattle Fire Department Administrative Rule 9.03.14 *Automatic Sprinkler and Standpipe Systems.* Where the building is of Type V construction, provided there is a roof or deck above. Sidewall sprinklers that are used to protect such areas shall be permitted to be located such that their deflectors are within 1 inch (25 mm) to 6 inches (152 mm) below the structural members and a maximum distance of 14 inches (356 mm) below the deck of the exterior balconies and decks that are constructed of open wood joist construction.

* * *

903.3.1.3 NFPA 13D sprinkler systems. *Automatic sprinkler systems* installed in one and two-family *dwellings*, Group R-3 and R-4 congregate living facilities and townhouses, when *approved* by the *fire code official*, shall be permitted to be installed throughout in accordance with NFPA 13D.

* * *

903.3.3 Obstructed locations. Automatic sprinklers shall be installed ((~~with due regard to obstructions that will delay activation or obstruct the water distribution pattern.~~)) in accordance with NFPA 13 obstruction criteria and the listing requirements of the sprinkler head. Automatic sprinklers shall be installed in or under covered kiosks, displays, booths, concession stands or equipment that exceeds 4 feet (1219 mm) in width and depth. Not less than a 3-foot (914 mm) clearance shall be maintained between automatic sprinklers and the top of piles of *combustible fibers*.

Exception: Kitchen equipment under exhaust hoods protected with a fire-extinguishing system in accordance with Section 904.

* * *

903.3.5 Water supplies. Water supplies for *automatic sprinkler systems* shall comply with this section and the standards referenced in Section 903.3.1. The potable water supply shall be protected against backflow in accordance with the requirements of this section and the *International Plumbing Code*. For connections to public waterworks systems, the water supply test data provided by Seattle Public Utility and used for design of fire protection systems shall be adjusted in accordance with Seattle Fire Department Administrative Rule 9.03.14 *Automatic Sprinkler and Standpipe Systems*, and any future revisions of this rule adopted by the *fire code official.* ((~~to account for seasonal and daily pressure fluctuations based on information from the water supply authority and as approved by the *fire code official.*~~))

903.3.5.1 Domestic services. ((~~Where the domestic service can provides the water supply for the *automatic sprinkler system*, the supply shall be~~)) Both NFPA 13R and NFPA 13D sprinkler systems can be supplied by a domestic service in accordance with this section.

903.3.5.2 ((~~**Residential combination**~~)) **Combined fire/domestic services.** A single combination water supply shall be allowed for all types of sprinkler systems provided that when required the domestic demand is added to the sprinkler demand ((~~as required~~)) in accordance with the domestic demand tables in by NFPA 13R.

903.3.5.3 Fire Service A fire service shall be allowed for all types of sprinkler systems.

[W] 903.3.5.4 Underground portions of fire protection system water supply piping. The installation or modification of an underground water main, public or private, supplying a water-based fire protection system shall be in accordance with NFPA 24 and chapter 18.160 RCW.

Piping and appurtenances downstream of the first control valve on the lateral or service line from the distribution main to one-foot above finished floor shall be approved by the fire code official. Such underground piping shall be installed by a fire sprinkler contractor licensed in accordance with chapter 18.160 RCW and holding either a Level U or a Level 3 license. For underground piping supplying systems installed in accordance with Section 903.3.1.2, a Level 2, 3, or U licensed contractor is acceptable.

Exceptions: Portions of underground piping that are combined fire/domestic services, or are supplying automatic sprinkler systems installed in accordance with NFPA 13D.

* * *

903.4 Sprinkler system supervision and alarms. All valves controlling the water supply for *automatic sprinkler systems*, pumps, tanks, water levels and temperatures, critical air pressures and water-flow switches on all sprinkler systems shall be electrically supervised by a *listed* fire alarm control unit.

Exceptions:

1. *Automatic sprinkler systems* protecting one- and two family *dwellings* and, if *approved* by the *fire code official, townhouses.*

2. Limited area systems serving fewer than 20 sprinklers.

3. *Automatic sprinkler systems* installed in accordance with NFPA 13R where a common supply main is used to supply both domestic water and the *automatic sprinkler system*, and a separate shutoff valve for the *automatic sprinkler system* is not provided.

4. Jockey pump control valves that are sealed or locked in the open position.

5. Control valves to commercial kitchen hoods, paint spray booths or dip tanks that are sealed or locked in the open position.

6. Valves controlling the fuel supply to fire pump engines that are sealed or locked in the open position.

7. Trim valves to pressure switches in dry, preaction and deluge sprinkler systems that are sealed or locked in the open position.

903.4.1 Monitoring. Alarm, supervisory and trouble signals shall be distinctly different and shall be automatically transmitted to an approved central station, remote supervising station or proprietary supervising station as defined in NFPA 72 or, when approved by the fire code official, shall sound an audible signal at a constantly attended location.

Exceptions:

1. ((~~Underground key or hub valves in roadway boxes~~)) Valves provided by the municipality or public utility are not required to be monitored.
2. Backflow prevention device test valves located in limited area sprinkler system supply piping shall be locked in the open position. In occupancies required to be equipped with a fire alarm system, the backflow preventer valves shall be electrically supervised by a tamper switch installed in accordance with NFPA 72 and separately annunciated.

* * *

SECTION 904
ALTERNATIVE AUTOMATIC FIRE-EXTINGUISHING SYSTEMS

* * *

[W] 904.12 Commercial cooking systems. The automatic fire- extinguishing system for commercial cooking systems shall be of a type recognized for protection of commercial cooking equipment and exhaust systems of the type and arrangement protected. Preengineered automatic

dry- and wet-chemical extinguishing systems shall be tested in accordance with UL 300 and *listed* and *labeled* for the intended application. Other types of automatic fire-extinguishing systems shall be *listed* and *labeled* for specific use as protection for commercial cooking operations. The system shall be installed in accordance with this code, its listing and the manufacturer's installation instructions. Signage shall be provided on the exhaust hood or system cabinet, indicating the type and arrangement of cooking appliances protected by the automatic fire extinguishing system. Signage shall indicate appliances from left to right, be durable, and the size color and lettering shall be approved. Automatic fire-extinguishing systems of the following types shall be installed in accordance with the referenced standard indicated, as follows:

1. Carbon dioxide extinguishing systems, NFPA 12.
2. *Automatic sprinkler systems*, NFPA 13.
3. Foam-water sprinkler system or foam-water spray systems, NFPA 16.
4. Dry-chemical extinguishing systems, NFPA 17.
5. Wet-chemical extinguishing systems, NFPA 17A.

Exception: Factory-built commercial cooking recirculating systems that are tested in accordance with UL 710B and *listed, labeled* and installed in accordance with Section 304.1 of the *International Mechanical Code*.

* * *

SECTION 905

STANDPIPE SYSTEMS

* * *

905.2 Installation standard. Standpipe systems shall be installed in accordance with this section, ((~~and~~)) NFPA 14, and Administrative Rule 9.03.14, *Automatic Sprinklers and*

Standpipes and any future revisions of this rule adopted by the *fire code official.*

905.3 Required installations. Standpipe systems shall be installed where required by Sections 905.3.1 through 905.3.8. Standpipe systems are allowed to be combined with *automatic sprinkler systems*.

Exception: Standpipe systems are not required in ((~~Group R-3 occupancies~~)) one and two family dwellings and townhouses.

* * *

905.3.3 Covered and open mall buildings. Covered mall and open mall buildings shall be equipped throughout with a Class I standpipe system with ((~~standpipe system where required by Section 905.3.1. Covered mall buildings not required to be equipped with a standpipe system by Section 905.3.1 shall be equipped with Class I hose connections connected to the *automatic sprinkler system* sized to deliver water at 250 gallons per minute (946.4 L/min) at the most hydraulically remote hose connection while concurrently supplying the *automatic sprinkler system* demand. The standpipe system shall be designed not to exceed a 50-pounds-per-square-inch (345 kPa) residual pressure loss with a flow of 250 gallons per minute (946.4 L/min) from the fire department connection to the hydraulically most remote hose connection. H~~)) hose connections ((~~shall be~~)) provided at each of the following locations:

1. Within the mall at the entrance to each *exit* passageway or *corridor*.
2. At each floor-level landing within enclosed *stairways* opening directly on the mall.
3. At exterior public entrances to the mall of a covered mall building.
4. At public entrances at the perimeter line of an open mall building.
5. At other locations as necessary so that the distance to reach all portions of a tenant space does not exceed 200 feet (60 960 mm) from a hose connection.

((~~**905.3.4 Stages.** Stages greater than 1,000 square feet (93 m2) in area shall be equipped with a Class III wet standpipe system with 11/2-inch and 21/2-inch (38 mm and 64 mm) hose connections on each side of the stage.~~

~~**Exception:** Where the building or area is equipped throughout with an *automatic sprinkler system*, a 11/2 inch (38 mm) hose connection shall be installed in accordance with NFPA 13 or in accordance with NFPA 14 for Class II or III standpipes.~~

~~**905.3.4.1 Hose and cabinet.** The 11/2-inch (38 mm) hose connections shall be equipped with sufficient lengths of 11/2-inch (38 mm) hose to provide fire protection for the stage area. Hose connections shall be equipped with an *approved* adjustable fog nozzle and be mounted in a cabinet or on a rack.~~))

905.3.((~~5~~))4 Underground buildings. Underground buildings shall be equipped throughout with a Class I automatic wet or manual wet standpipe system.

905.3.((~~6~~))5 Helistops and heliports. Buildings with a rooftop *helistop* or *heliport* shall be equipped with a Class I or III standpipe system extended to the roof level on which the *helistop* or *heliport* is located in accordance with Section 2007.5.

905.3.((~~7~~))6 Marinas and boatyards. Standpipes in marinas and boatyards shall comply with Chapter 36.

905.3.((~~8~~))7 Rooftop gardens and landscaped roofs. Buildings or structures that have rooftop gardens or landscaped roofs and that are equipped with a standpipe system shall have the standpipe system extended to the roof level on which the rooftop garden or landscaped roof is located.

905.4 Location of Class I standpipe hose connections. Class I standpipe hose connections shall be provided in all of the following locations:

1. In every required *stairway*, a hose connection shall be provided for each floor level above or below grade. Hose connections shall be located at an intermediate floor level landing between floors, or the main floor landing, but must be consistent throughout a building. ((~~unless otherwise *approved* by the *fire code official.*~~))
2. On each side of the wall adjacent to the *exit* opening of a horizontal *exit*.

Exception: Where floor areas adjacent to a horizontal *exit* are reachable from *exit stairway* hose connections by a 30-foot (9144 mm) hose stream from a nozzle attached to 100 feet (30 480 mm) of hose, a hose connection shall not be required at the horizontal *exit*.

3. In every *exit* passageway, at the entrance from the exit passageway to other areas of a building.

Exception: Where floor areas adjacent to an exit passageway are reachable from *exit stairway* hose connections by a 30-foot (9144 mm) hose stream from a nozzle attached to 100 feet (30 480 mm) of hose, a hose connection shall not be required at the entrance from the exit passageway to other areas of the building.

4. In covered mall buildings, adjacent to each exterior public entrance to the mall, and adjacent to each entrance from an *exit* passageway or *exit corridor* to the mall. In open mall buildings, adjacent to each public entrance to the mall at the perimeter line and adjacent to each entrance from an *exit passageway* or *exit corridor* to the mall.
5. Where the roof has a slope less than four units vertical in 12 units horizontal (33.3-percent slope), a hose connection shall be located to serve the roof or at the highest landing of a stairway with stair access to the roof provided in accordance with Section 1009.16. Hose connections on a roof shall be at least 10 ft. (3048 mm) from the roof edge, skylight, light

well or other opening, unless protected by an *approved* 42-inch-high (1067 mm) guardrail or equivalent.

6. Where the most remote portion of a nonsprinklered floor or story is more than 150 feet (45 720 mm) from a hose connection or the most remote portion of a sprinklered floor, roof, or story is more than 200 feet (60 960 mm) from a hose connection, the *fire code official* is authorized to require that additional hose connections be provided in *approved* locations. Access to the additional hose connections shall be through protected enclosures. The protected enclosure shall be a *corridor* constructed as a *smoke barrier* from the *exit enclosure* to the standpipe connection. Additional hose connections in parking garages and roofs are not required to be accessed through or located in protected enclosures.

* * *

((~~**905.5.1 Groups A-1 and A-2.** In Group A-1 and A-2 occupancies with *occupant loads* of more than 1,000, hose connections shall be located on each side of any stage, on each side of the rear of the auditorium, on each side of the balcony, and on each tier of dressing rooms.~~))

905.5.((~~2~~))1 Protection. Fire-resistance-rated protection of risers and laterals of Class II standpipe systems is not required.

905.5.((~~3~~))2 Class II system 1-inch hose. A minimum 1-inch (25 mm) hose shall be allowed to be used for hose stations in light-hazard occupancies where investigated and *listed* for this service and where *approved* by the *fire code official*.

* * *

905.9 Valve supervision. Valves controlling water supplies shall be supervised in the open position so that a change in the normal position of the valve will generate a supervisory signal at

the supervising station required by Section 903.4. Where a fire alarm system is provided, a signal shall also be transmitted to the control unit.

Exceptions:

1. Valves ((~~to underground key or hub valves in roadway boxes~~)) provided by the municipality or public utility do not require supervision.
2. Valves locked in the normal position and inspected as provided in this code in buildings not equipped with a fire alarm system <u>or approved supervising station.</u>

* * *

SECTION 907

FIRE ALARM AND DETECTION SYSTEMS

907.1 General. This section covers the application, installation, performance and maintenance of fire alarm systems and their components in new and existing buildings and structures The requirements of Section 907.2 are applicable to new buildings and structures. The requirements of Section 907.3 are applicable to existing buildings and structures.

<u>Buildings required by this section to be provided with a fire alarm system shall be provided with a single fire alarm system. For the purposes of this section, fire walls not located on a property line shall not constitute a separate building.</u>

<u>**Exception:** A single system is not required in existing buildings that are being increased in size and the existing fire alarm system is unable to expand into the new space. In those cases multiple systems shall be arranged as described below for nonrequired fire alarm systems.</u>

<u>Buildings not required by this section to be provided with a fire alarm system may be provided with multiple partial fire alarm systems if:</u>

1. The systems are connected so that all systems simultaneously activate alarm notification appliances upon a signal from any of the fire alarm systems in the building, and
2. The location of each system's annunciator panel (or main panel) is also provided with annunciator panels with reset capability for every other system in the building.

* * *

[W] 907.1.2 Fire alarm shop drawings. All construction documents shall be reviewed by a NICET III or IV in fire alarms or a licensed Professional Engineer (PE) in Washington prior to being submitted for permitting. The reviewing professional shall submit a stamped, signed, and dated letter; or a verification method approved by the local authority having jurisdiction indicating the system has been reviewed and meets or exceeds the design requirements of the State of Washington and the local jurisdiction. (effective July 1, 2017)

* * *

[W] 907.2.3 Group E. A manual fire alarm system that initiates the occupant notification signal utilizing an emergency voice/alarm communication system meeting the requirements of Section 907.5.2.2 and installed in accordance with Section 907.6 shall be installed in Group E occupancies. When *automatic sprinkler systems* or smoke detectors are installed, such systems or detectors shall be connected to the building fire alarm system.

Exceptions:

1. A manual fire alarm system is not required in Group E occupancies with an *occupant load* of 50 or less.
2. Emergency voice/alarm communication systems meeting the requirements of Section 907.5.2.2 and installed in accordance with Section 907.6 shall not be required in Group E occupancies with occupant loads of 100 or less, provided that activation of the manual fire

alarm system initiates an *approved* occupant notification signal in accordance with Section 907.5.

3. Manual fire alarm boxes are not required in Group E occupancies where all of the following apply:

3.1. Interior *corridors* are protected by smoke detectors.

3.2. Auditoriums, cafeterias, gymnasiums and similar areas are protected by *heat detectors* or other *approved* detection devices.

3.3. Shops and laboratories involving dusts or vapors are protected by *heat detectors* or other *approved* detection devices.

4. Manual fire alarm boxes shall not be required in Group E occupancies where all of the following apply:

4.1 The building is equipped throughout with an *approved automatic sprinkler system* installed in accordance with Section 903.3.1.1.

4.2 The emergency voice/alarm communication system will activate on sprinkler water flow, and manual activation.

4.3 ((~~Manual activation is provided from a normally occupied location.~~))

* * *

[W] 907.2.6 Group I. A manual fire alarm system that activates the occupant notification system in accordance with Section 907.5 shall be installed in Group I occupancies. An automatic smoke detection system that activates the occupant notification system in accordance with Section 907.5 shall be provided in accordance with Sections 907.2.6.1, 907.2.6.2 ((~~and~~)) 907.2.6.3.3 and 907.2.6.4.

Exceptions:

1. Manual fire alarm boxes in *sleeping units* of Group I-1 and I-2 occupancies shall not be required at *exit*s if located at all ((~~care providers'~~)) nurses' control stations or other constantly attended staff locations, provided such stations are visible and continuously accessible and that the distances of travel required in Section 907.4.2.1 are not exceeded.
2. Occupant notification systems are not required to be activated where private mode signaling installed in accordance with NFPA 72 is *approved* by the *fire code official* and staff evacuation responsibilities are included in the fire safety and evacuation plan required by Section 404.

[W] 907.2.6.1 Group I-1. An automatic smoke detection system shall be installed in *corridors,* waiting areas open to *corridors* and *habitable spaces* other than *sleeping units* and kitchens. The system shall be activated in accordance with Section 907.4 ((~~907.5~~)).

* * *

[W] 907.2.6.4 Group I-4. A manual fire alarm system that initiates the occupant notification signal utilizing an emergency voice/alarm communication system meeting the requirements of Section 907.5.2.2 and installed in accordance with Section 907.6 shall be installed in Group I-4 occupancies. When automatic sprinkler systems or smoke detectors are installed, such systems or detectors shall be connected to the building fire alarm system.

Exceptions:

1. A manual fire alarm system is not required in Group I-4 occupancies with an occupant load of 50 or less.
2. Emergency voice/alarm communication system meeting the requirements of Section 907.5.2.2 and installed in accordance with Section 907.6 shall not be required in Group I-4 occupancies with occupant loads of 100 or less, provided that activation of the manual fire

alarm system initiates an approved occupant notification signal in accordance with Section 907.5.

* * *

907.2.7 Group M. A manual fire alarm system that activates the occupant notification system in accordance with Section 907.5 shall be installed in Group M occupancies where one of the following conditions exists:

1. The combined Group M occupant load of all floors is 500 or more persons.
2. The Group M occupant load is more than 100 persons above or below the lowest level of exit discharge.

Exceptions:

1. A manual fire alarm system is not required in covered or open mall buildings complying with Section 402 of the International Building Code.
2. Manual fire alarm boxes are not required where the building is equipped throughout with an automatic sprinkler system installed in accordance with Section 903.3.1.1 and the occupant notification appliances will automatically activate throughout the notification zones upon sprinkler water flow.

((~~**907.2.7.1 Occupant notification.** During times that the building is occupied, the initiation of a signal from a manual fire alarm box or from a water flow switch shall not be required to activate the alarm notification appliances when an alarm signal is activated at a constantly attended location from which evacuation instructions shall be initiated over an emergency voice/alarm communication system installed in accordance with Section 907.6.2.2.~~))

* * *

907.2.8.2 Point of Information

Smoke detectors may be required throughout corridors in accordance with Seattle Mechanical Code Section 606.2, depending on design details of the mechanical systems.

907.2.8.2 Automatic ((~~smoke~~)) detection system. An automatic smoke detection system that activates the occupant notification system in accordance with Section 907.6 shall be installed throughout all interior *corridors* serving *sleeping units*. Automatic heat detectors shall be provided in any unsprinklered interior areas outside guestrooms other than attics and crawl spaces.

* * *

907.2.9.1 Point of Information

Smoke detectors may be required throughout corridors in accordance with Seattle Mechanical Code Section 606.2, depending on design details of the mechanical systems.

907.2.9 Group R-2. Fire alarm systems and smoke alarms shall be installed in Group R-2 occupancies as required in Sections 907.2.9.1 and 907.2.9.3.

907.2.9.1 Manual fire alarm system. A manual fire alarm system that activates the occupant notification system in accordance with Section 907.6 shall be installed in Group R-2 occupancies where any of the following conditions apply:

1. Any *dwelling unit* or *sleeping unit* is located three or more stories above the lowest *level of exit discharge*;
2. Any *dwelling unit* or *sleeping unit* is located more than one story below the highest *level of exit discharge* of *exit*s serving the *dwelling unit* or *sleeping unit*; or
3. The building contains more than 16 *dwelling units* or *sleeping units*.

Exceptions:

1. A fire alarm system is not required in buildings not more than two stories in height where all *dwelling units* or *sleeping units* and contiguous attic and crawl spaces are separated from each other and public or common areas by at least 1-hour *fire partitions* and each *dwelling unit* or *sleeping unit* has an *exit* directly to a *public way*, *exit court* or yard.
2. Manual fire alarm boxes are not required where the building is equipped throughout with an *automatic sprinkler system* installed in accordance with Section 903.3.1.1 or 903.3.1.2 and the occupant notification appliances will automatically activate throughout the notification zones upon a sprinkler water flow.
3. A fire alarm system is not required in buildings that do not have interior *corridors* serving *dwelling units* and are protected by an *approved automatic sprinkler system* installed in accordance with Section 903.3.1.1 or 903.3.1.2, provided that *dwelling units* either have a *means of egress* door opening directly to an exterior *exit access* that leads directly to the *exits* or are served by open-ended *corridors* designed in accordance with Section 1026.6, Exception 4.
4. A fire alarm system is not required in townhouses if approved by the *fire code official*.

* * *

907.2.9.4 Automatic heat detection. An automatic heat detection system shall be installed throughout all unsprinklered interior areas outside dwelling units other than attics and crawl spaces.

[W] ((~~**907.2.10 Group R-4.** Fire alarm systems and smoke alarms shall be installed in Group R-4 occupancies as required in Sections 907.2.10.1 through 907.2.10.3.~~

~~**907.2.10.1 Manual fire alarm system.** A manual fire alarm system that activates the occupant notification system in accordance with Section 907.6 shall be installed in Group R-4 occupancies.~~

~~**Exceptions:**~~

~~1. A manual fire alarm system is not required in buildings not more than two stories in height where all individual *sleeping units* and contiguous attic and crawl spaces to those units are separated from each other and public or common areas by at least 1-hour *fire partitions* and each individual *sleeping unit* has an *exit* directly to a *public way*, *exit court* or yard.~~

~~2. Manual fire alarm boxes are not required throughout the building when the following conditions are met:~~

~~2.1. The building is equipped throughout with an *automatic sprinkler system* installed in accordance with Section 903.3.1.1 or 903.3.1.2;~~

~~2.2. The notification appliances will activate upon sprinkler water flow; and~~

~~2.3. At least one manual fire alarm box is installed at an *approved* location.~~

~~3. Manual fire alarm boxes in resident or patient sleeping areas shall not be required at *exits* where located at all nurses' control stations or other constantly attended staff locations, provided such stations are visible and continuously accessible and that travel distances required in Section 907.5.2.1 are not exceeded.~~

~~**907.2.10.2 Automatic smoke detection system.** An automatic smoke detection system that activates the occupant notification system in accordance with Section 907.6 shall be installed in *corridors*, waiting areas open to *corridors* and *habitable spaces* other than *sleeping units* and kitchens.~~

~~**Exceptions:**~~

~~1. Smoke detection in *habitable spaces* is not required where the facility is equipped throughout with an *automatic sprinkler system* installed in accordance with Section 903.3.1.1.~~

~~2. An automatic smoke detection system is not required in buildings that do not have interior *corridors* serving *sleeping units* and where each *sleeping unit* has a *means of egress* door opening directly to an *exit* or to an exterior *exit access* that leads directly to an exit.~~

~~**907.2.10.3 Smoke alarms.** Single- and multiple-station smoke alarms shall be installed in accordance with Section 907.2.11.~~))

* * *

907.2.11.2 Groups R-2, R-3, ((~~R-4~~)) and I-1. Single or multiple-station smoke alarms shall be installed and maintained in Groups R-2, R-3,((~~R-4~~)) and I-1 regardless of *occupant load* at all of the following locations:

1. On the ceiling or wall outside of each separate sleeping area in the immediate vicinity of bedrooms.
2. In each room used for sleeping purposes.

Exception: Single- or multiple-station smoke alarms in Group I-1 shall not be required where smoke detectors are provided in the sleeping rooms as part of an automatic smoke detection system.

3. In each story within a *dwelling unit*, including *basements* but not including crawl spaces and uninhabitable attics. In *dwellings* or *dwelling units* with split levels and without an intervening door between the adjacent levels, a smoke alarm installed on the upper level shall suffice for the adjacent lower level provided that the lower level is less than one full story below the upper level.

907.2.11.3 Interconnection. Where more than one smoke alarm is required to be installed within an individual *dwelling unit* or *sleeping unit* in Group R-1, R-2((,)) or ((~~or R-4~~)) R-3, the smoke alarms shall be interconnected in such a manner that the activation of one alarm will activate all of the alarms in the individual unit. The alarm shall be clearly audible in all bedrooms over background noise levels with all intervening doors closed.

* * *

907.2.13 High-rise buildings. Buildings with a floor used for human occupancy located more than 75 feet (22 860 mm) above the lowest level of fire department vehicle access shall be provided with an automatic smoke detection system in accordance with Section 907.2.13.1, a fire department communication system in accordance with Section 907.2.13.2 and an emergency voice/alarm communication system in accordance with Section 907.6.2.2.

Exceptions:

1. Airport traffic control towers in accordance with Section 907.2.22 and Section 412 of the *International Building Code*.
2. Open parking garages in accordance with Section 406.3 of the *International Building Code*.
3. Buildings with an occupancy in Group A-5 in accordance with Section 303.1 of the *International Building Code*.
4. Low-hazard special occupancies in accordance with Section 503.1.1 of the *International Building Code*.

((~~5. Buildings with an occupancy in Group H-1, H-2 or H-3 in accordance with Section 415 of the *International Building Code*.~~))

((~~6~~)) 5. In Group I-1 and I-2 occupancies, the alarm shall sound at a constantly attended location and general occupant notification shall be broadcast by the emergency voice/alarm communication system.

* * *

907.2.13.2 Fire department communication system. Where a wired communication system is *approved* in lieu of a radio coverage system in accordance with Section 510, the wired fire department communication system shall be designed and installed in accordance with NFPA 72 and shall operate between a *fire command center* complying with Section 508, elevators, elevator lobbies, emergency and standby power rooms, fire pump rooms, areas of refuge and inside enclosed *exit stairways*. The fire department communication device shall be provided at each floor level within the enclosed *exit stairway*. Eight portable handsets for the communication system shall be provided in the *fire command center*.

* * *

907.3.1 Duct smoke detectors. Smoke detectors installed in ducts shall be *listed* for the air velocity, temperature and humidity present in the duct. Duct smoke detectors shall be connected to the building's fire alarm control unit when a fire alarm system is required by Section 907.2. Activation of a duct smoke detector shall initiate a visible and audible supervisory signal at a constantly attended location and shall perform the intended fire safety function in accordance with this code and the *International Mechanical Code*. Duct smoke detectors shall not be used as a substitute for required open area detection and shall not activate the occupant notification system.

Exception((s)):

1. ((~~The supervisory signal at a constantly attended location is not required where duct smoke detectors activate the building's alarm notification appliances.~~))
2. In occupancies not required to be equipped with a fire alarm system, actuation of a smoke detector shall activate a visible and an audible signal in an *approved* location. Smoke detector trouble conditions shall activate a visible or audible signal in an *approved* location and shall be identified as air duct detector trouble.

* * *

907.3.3 Elevator emergency operation. Automatic fire detectors installed for elevator emergency operation shall be installed in accordance with the provisions of ((~~ASME A17.1 and NFPA 72.~~)) Administrative Rule 9.06.14, *Sprinkler Systems and Fire Alarms for Elevator Machinery Rooms, Hoist Ways and Pits* and any future revisions of this rule adopted by the *fire code official.*

* * *

907.5.2.1.1 Average sound pressure. The audible alarm notification appliances shall provide a sound pressure level of 15 decibels (dBA) above the average ambient sound level or 5 dBA above the maximum sound level having a duration of at least 60 seconds, whichever is greater, in every occupiable space within the building. The minimum sound pressure levels shall be: 75 dBA in occupancies in Groups R and I-condition 1; 90 dBA in mechanical equipment rooms; and 60 dBA in other occupancies.

Exceptions:

1. Private mode signaling in accordance with NFPA 72 is allowed in areas of Group I-2 and I -3 occupancies if occupants are not expected to self evacuate.

2. Alarm systems installed in selected parts of a building are required to meet sound pressure requirements within the selected area of the building only.

* * *

907.5.2.3 Visible alarms. Visible alarm notification appliances shall be provided in accordance with Sections 907.5.2.3.1 through 907.5.2.3.4, and Administrative Rule 9.09.07, *Visible Alarm Notification Devices* and any future revisions of this rule adopted by the *fire code official.*

Exceptions:

1. Visible alarm notification appliances are not required in *alterations*, except where an existing fire alarm system is upgraded or replaced, or a new fire alarm system is installed.
2. Visible alarm notification appliances shall not be required in *exits* as defined in Chapter 2.
3. Visible alarm notification appliances shall not be required in elevator cars.
4. Visual alarm notification appliances are not required in critical care areas of Group I-2 Condition 2 occupancies that are in compliance with Section 907.2.6, Exception 2.

* * *

907.6.4.1 ((~~Zoning indicator~~)) Annunciator panel. ((~~A zoning indicator panel and the associated controls shall be provided in an *approved* location.~~)) All fire alarm systems in buildings without a fire command center shall be provided with an annunciator panel (or the main fire alarm control panel) located inside the building at the main building entrance. The visual zone indication on the annunciator panel shall lock in until the system is reset and shall not be canceled by the operation of an audible alarm-silencing switch.

* * *

907.6.6 Monitoring. Fire alarm systems required by this chapter or by the *International Building Code* shall be monitored by an *approved* supervising station in accordance with NFPA 72.

Exception: Monitoring by a supervising station is not required for:

1. Single- and multiple-station smoke alarms required by Section 907.2.11.
2. Smoke detectors in Group I-3 occupancies.
3. *Automatic sprinkler systems* in one- and two-family dwellings and *townhouses*.

* * *

907.6.6.2 Termination of monitoring service. Termination of fire alarm monitoring services shall be in accordance with Section 901.9.

907.6.6.2 Point of Information
Termination of monitoring service only applies when monitoring contracts expire, or are cancelled

* * *

907.7 Acceptance tests and completion. Upon completion of the installation, and after the electrical inspector has approved the installation, the fire alarm system and all fire alarm components shall be tested in accordance with NFPA 72.

* * *

907.10 Resetting fire alarm equipment. Fire alarm equipment shall be reset upon activation only when directed by fire department personnel.

Exception: If approved by the *fire code official.*

* * *

* * *

SECTION 909

SMOKE CONTROL SYSTEM

* * *

909.2 General design requirements. Buildings, structures, or parts thereof required by the *International Building Code* or this code to have a smoke control system or systems shall have such systems designed in accordance with the applicable requirements of Section 909 and the generally accepted and well-established principles of engineering relevant to the design. The *construction documents* shall include sufficient information and detail to describe adequately the elements of the design necessary for the proper implementation of the smoke control systems. These documents shall be accompanied with sufficient information and analysis to demonstrate compliance with these provisions.

Point of Information

See Seattle Building Code for details of shaft pressurization requirements

* * *

909.11 ((~~Standby Power~~)) Emergency power source. Smoke control systems shall be provided with ((~~standby~~)) emergency power in accordance with Section 604.

909.11.1 Equipment room. The ((~~standby power source~~)) emergency power source and its transfer switches shall be in a room separate from the normal power transformers and switch gears and ventilated directly to and from the exterior. The room shall be enclosed with not less than 1-hour *fire barriers* constructed in accordance with Section 707 of the *International Building Code* or *horizontal assemblies* constructed in accordance with Section 711 of the *International Building Code*, or both.

Exceptions:

1. Where located within a sprinklered parking garage of Type I or II construction, emergency power and legally required standby power systems with fixed fuel quantities meeting the limits of Section 603.3 of the International Fire Code, and their transfer switches, are not

required to be in a separate room. Other occupancies located in the story where the system is located shall be separated from the system by fire barriers with a minimum 1 hour fire-resistance rating.

2. Combustion and radiator intake air are permitted to be transferred from the adjacent garage. Radiator discharge air is permitted to be transferred to the adjacent garage. Radiator ventilation intake and discharge air locations shall be separated to maintain the radiator ventilation intake air temperature below the maximum temperature allowed to meet the emergency and legally required standby power system loads.

909.11.2 Power sources and power surges. Elements of the smoke control system relying on volatile memories or the like shall be supplied with uninterruptable power sources of sufficient duration to span 15-minute primary power interruption. Elements of the smoke control system susceptible to power surges shall be suitably protected by conditioners, suppressors or other *approved* means.

909.11.3 Wiring. In addition to meeting requirements of the Seattle Electrical Code, all wiring regardless of voltage, shall have fire-resistance-rated protection of at least two hours or as required in rules promulgated by the building official.

Exception: Subject to the approval of the building official, fire-resistance rating is not required for wiring located in a parking garage.

* * *

909.12.1 Verification. Control systems for mechanical smoke control systems shall include provisions for verification. Verification shall include positive confirmation of actuation, testing, manual override, and the presence of power downstream of all disconnects. A preprogrammed weekly test sequence shall report abnormal conditions audibly, visually and by printed report.

The preprogrammed weekly test shall operate all devices, equipment, and components used for smoke control.

Exceptions:

1. Weekly testing is not required for stairway and hoistway pressurization systems.
2. Where verification of individual components tested through the preprogrammed weekly testing sequence will interfere with, and produce unwanted effects to, normal building operation, such individual components are permitted to be bypassed from the preprogrammed weekly testing, where *approved* by the *fire code official* and in accordance with both of the following:

1. Where the operation of components is bypassed from the preprogrammed weekly test, presence of power downstream of all disconnects shall be verified weekly by a listed control unit.

2. Testing of all components bypassed from the preprogrammed weekly test shall be in accordance with Section 909.20.6.

909.12.2 Wiring. See section 909.11.3. ((~~In addition to meeting requirements of NFPA 70, all wiring, regardless of voltage, shall be fully enclosed within continuous raceways~~.))

909.12.3 Activation. Smoke control systems shall be activated in accordance with this section.

909.12.3.1 Pressurization, airflow or exhaust method. Mechanical smoke control systems using the pressurization, airflow or exhaust method shall have completely automatic control.

909.12.3.2 Passive method. Passive smoke control systems actuated by *approved* spot-type detectors *listed* for releasing service shall be permitted.

909.12.4 Automatic control. Where completely automatic control is required or used, the automatic-control sequences shall be initiated from an appropriately zoned *automatic sprinkler*

system complying with Section the fire department, and any smoke detectors ((~~required by the engineering analysis~~)).

* * *

909.16 Fire-fighter's smoke control panel. A fire-fighter's smoke control panel for fire department emergency response purposes only shall be provided and shall include manual control or override of automatic control for mechanical smoke control systems. The panel shall be located in a *fire command center* complying with Section 508 in high-rise buildings or buildings with smoke-protected assembly seating. In all other buildings, the fire-fighter's smoke control panel shall be installed in an *approved* location adjacent to the fire alarm control panel. The fire-fighter's smoke control panel shall comply with Sections 909.16.1 through 909.16.3.

The smoke control panel for high rise buildings shall include a visual depiction of the building showing typical floor plan(s) with locations of exit enclosures and elevator shafts. The panel shall also include section views of the building to show the extent of travel for each exit enclosure and elevator. Exit enclosures and elevator shafts shall be labeled on the plan section views to match the labeling used in the building itself.

Exception: For buildings that have a simple shaft configuration and utilize shaft pressurization for smoke control, shaft pressurization fan status and controls in accordance with Section 909.16.2 (or equivalent) may be installed on the main fire alarm control panel (FACP) in lieu of installing a dedicated fire-fighter's smoke control panel. The building graphics normally provided on the smoke control panel shall be laminated and mounted in the vicinity of the FACP for quick reference by emergency responders.

909.16.1 Smoke control systems. Fans within the building shall be shown on the fire-fighter's control panel. Fan control switches shall be located on the panel in the vicinity of the location

where the shaft supplied by each fan is depicted. A clear indication of the direction of airflow and the relationship of components shall be displayed. Status indicators shall be provided for all smoke control ((~~equipment~~)) fans in accordance with the following: ((~~, annunciated by fan and zone and by pilot lamp-type indicators as follows:~~))

1. Fans ((~~, dampers and other operating equipment in their normal status~~)) in a ready/non-operating status—WHITE.

2. Fans ((~~, dampers and other operating equipment~~)) in their off or closed status—RED.

3. Fans ((~~, dampers and other operating equipment in their on or open status~~)) in operation—GREEN.

4. Fans ((~~, dampers and other operating equipment in a fault status~~)) in a fault condition —YELLOW/AMBER.

909.16.2 Smoke control panel. The fire-fighter's control panel shall provide control capability over the complete smoke-control system equipment within the building as follows:

1. ON-AUTO-OFF control over each shaft pressurization fan. ((~~individual piece of operating smoke control equipment that can also be controlled from other sources within the building. This includes *stairway* pressurization fans; smoke exhaust fans; supply, return and exhaust fans; elevator shaft fans; and other operating equipment used or intended for smoke control purposes.~~))

2. AUTO-OFF-POSITIVE PRESSURE-NEGATIVE PRESSURE control of each smoke control zone designed with such features. Individual control of each damper and fan used to achieve the positive or negative pressure condition is not required. ((~~OPEN-AUTO-CLOSE control over individual dampers relating to smoke control and that are also controlled from other sources within the building.~~))

3. AUTO-EXHAUST-OFF control of each smoke exhaust zone using the exhaust method of smoke control.((~~ON-OFF or OPEN-CLOSE control over smoke control and other critical equipment associated with a fire or smoke emergency and that can only be controlled from the fire-fighter's control panel.~~))

Exception((~~s~~)):

1. Complex exhaust systems using multiple exhaust fans and/or zones may require individual fan control if required by the *fire code official*.((~~Complex systems, where *approved*, where the controls and indicators are combined to control and indicate all elements of a single smoke zone as a unit.~~

~~2. Complex systems, where *approved*, where the control is accomplished by computer interface using *approved*, plain English commands.~~))

* * *

909.18.8 Special inspections for smoke control. Smoke control systems shall be tested by a special inspector for compliance with the *approved* design.

909.18.8.1 Scope of testing. Testing shall be conducted ((~~in accordance with the following:~~ prior to occupancy and after sufficient completion for the purposes of pressure-difference testing, flow measurements, and detection and control verification.

~~1. During erection of ductwork and prior to concealment for the purposes of leakage testing and recording of device location~~.

~~2. Prior to occupancy and after sufficient completion for the purposes of pressure-difference testing, flow measurements, and detection and control verification.~~))

* * *

909.19 System acceptance. Buildings, or portions thereof, required by this code to comply with this section shall not be issued a certificate of occupancy until such time that the *fire code official* determines that the provisions of this section have been fully complied with and that the fire department has received satisfactory instruction on the operation, both automatic and manual, of the system and a written maintenance program complying with the requirements of Section 909.20.1 has been submitted and *approved* by the *fire code official*.

Exception: In buildings of phased construction, a temporary certificate of occupancy, as *approved* by the ((~~fire code~~)) building official, shall be allowed, provided that those portions of the building to be occupied meet the requirements of this section and that the remainder does not pose a significant hazard to the safety of the proposed occupants or adjacent buildings.

* * *

Point of Information

See Seattle Building Code for details of shaft pressurization requirements

((~~**[BF] 909.21 Elevator hoistway pressurization alternative.** Where elevator hoistway pressurization is provided in lieu of required enclosed elevator lobbies, the pressurization system shall comply with Sections 909.21.1 through 909.21.11.~~

~~**[BF] 909.21.1 Pressurization requirements.** Elevator hoistways shall be pressurized to maintain a minimum positive pressure of 0.10 inch of water (25 Pa) and a maximum positive pressure of 0.25 inch of water (67 Pa) with respect to adjacent occupied space on all floors. This pressure shall be measured at the midpoint of each hoistway door, with all elevator cars at the floor of recall and all hoistway doors on the floor of recall open and all other hoistway doors closed. The pressure differential shall be measured between the hoistway and the adjacent elevator landing. The opening and closing of hoistway doors at each level must be demonstrated~~

~~during this test. The supply air intake shall be from an outside, uncontaminated source located a minimum distance of 20 feet (6096 mm) from any air exhaust system or outlet.~~

~~**Exceptions:**~~

~~1. On floors containing only Group R occupancies, the pressure differential is permitted to be measured between the hoistway and a *dwelling unit* or *sleeping unit*.~~

~~2. Where an elevator opens into a lobby enclosed in accordance with Section 3007.6 or 3008.6 of the *International Building Code*, the pressure differential is permitted to be measured between the hoistway and the space immediately outside the door(s) from the floor to the enclosed lobby.~~

~~3. The pressure differential is permitted to be measured relative to the outdoor atmosphere on floors other than the following:~~

~~3.1. The fire floor.~~

~~3.2. The two floors immediately below the fire floor.~~

~~3.3. The floor immediately above the fire floor.~~

~~4. The minimum positive pressure of 0.10 inch of water (25 Pa) and a maximum positive pressure of 0.25 inch of water (67 Pa) with respect to occupied floors is not required at the floor of recall with the doors open.~~

~~**[BF] 909.21.1.1 Use of ventilation systems.** Ventilation systems, other than hoistway supply air systems, are permitted to be used to exhaust air from adjacent spaces on the fire floor, two floors immediately below and one floor immediately above the fire floor to the building's exterior where necessary to maintain positive pressure relationships as required in Section 909.21.1 during operation of the elevator shaft pressurization system.~~

~~**[BF] 909.21.2 Rational analysis.** A rational analysis complying with Section 909.4 shall be submitted with the *construction documents*.~~

~~**[BF] 909.21.3 Ducts for system.** Any duct system that is part of the pressurization system shall be protected with the same *fire-resistance rating* as required for the elevator shaft enclosure.~~

~~**[BF] 909.21.4 Fan system.** The fan system provided for the pressurization system shall be as required by Sections 909.21.4.1 through 909.21.4.4.~~

~~**[BF] 909.21.4.1 Fire resistance.** Where located within the building, the fan system that provides the pressurization shall be protected with the same *fire-resistance rating* required for the elevator shaft enclosure.~~

~~**[BF] 909.21.4.2 Smoke detection.** The fan system shall be equipped with a smoke detector that will automatically shut down the fan system when smoke is detected within the system.~~

~~**[BF] 909.21.4.3 Separate systems.** A separate fan system shall be used for each elevator hoistway.~~

~~**[BF] 909.21.4.4 Fan capacity.** The supply fan shall be either adjustable with a capacity of not less than 1,000cfm (0.4719 m3/s) per door, or that specified by a *registered design professional* to meet the requirements of adesigned pressurization system.~~

~~**[BF] 909.21.5 Standby power.** The pressurization system shall be provided with standby power in accordance with Section 604.~~

~~**[BF] 909.21.6 Activation of pressurization system.** The elevator pressurization system shall be activated upon activation of either the building fire alarm system or the elevator lobby smoke detectors. Where both a building fire alarm system and elevator lobby smoke detectors are present, each shall be independently capable of activating the pressurization system.~~

~~**[BF] 909.21.7 Testing.** Testing for performance shall be required in accordance with Section 909.18.8. System acceptance shall be in accordance with Section 909.19.~~

~~**[BF] 909.21.8 Marking and identification.** Detection and control systems shall be marked in accordance with Section 909.14.~~

~~**[BF] 909.21.9 Control diagrams.** Control diagrams shall be provided in accordance with Section 909.15.~~

~~**[BF] 909.21.10 Control panel.** A control panel complying with Section 909.16 shall be provided.~~

~~**[BF] 909.21.11 System response time.** Hoistway pressurization systems shall comply with the requirements for smoke control system response time in Section 909.17.~~))

* * *

SECTION 912

FIRE DEPARTMENT CONNECTIONS

* * *

912.5 Signs. A metal sign with raised letters at least 1 inch (25 mm) in size shall be mounted on all fire department connections serving automatic sprinklers, standpipes or fire pump connections. Such signs shall read: AUTOMATIC SPRINKLERS or STANDPIPES or TEST CONNECTION or a combination thereof as applicable. Where the fire department connection does not serve the entire building, a sign shall be provided indicating the portions of the building served.

912.5.1 Signs for high-rise buildings. An additional sign with letters at least 1 inch in size shall be provided at the fire department connections of high-rise buildings that indicate the building fire pump static (churn) discharge pressure. Where the pump is more than two stories above or below the fire department connections, the pump static/churn discharge pressure on the signage shall be adjusted to correct for the elevation difference.

* * *

SECTION 914

FIRE PROTECTION BASED ON SPECIAL DETAILED REQUIREMENTS OF USE AND OCCUPANCY

* * *

914.3 High-rise buildings. *High-rise buildings* shall comply with Sections 914.3.1 through 914.3.5.

914.3.1 Automatic sprinkler system. Buildings and structures shall be equipped throughout with an *automatic sprinkler system* in accordance with Section 903.3.1.1 and a secondary water supply where required by Section 903.3.5.2.

Exception: An *automatic sprinkler system* shall not be required in spaces or areas of((:)) ((~~1. Open parking garages in accordance with Section 406.5 of the *International Building Code*.~~))

((~~2. T~~)) telecommunications equipment buildings used exclusively for telecommunications equipment, associated electrical power distribution equipment, batteries and standby engines, provided that those spaces or areas are equipped throughout with an automatic fire detection system in accordance with Section 907.2 and are separated from the remainder of the building by not less than 1-hour *fire barriers* constructed in accordance with Section 707 of the *International Building Code* or not less than 2-hour *horizontal assemblies* constructed in accordance with Section 711 of the *International Building Code*, or both.

((~~**914.3.1.1 Number of sprinkler risers and system design.** Each sprinkler system zone in buildings that are more than 420 feet (128 m) in height shall be supplied by a minimum of two~~

~~risers. Each riser shall supply sprinklers on alternate floors. If more than two risers are provided for a zone, sprinklers on adjacent floors shall not be supplied from the same riser.~~))

914.3.1.1 Automatic sprinkler system design. High-rise building sprinkler systems shall be combination standpipe/sprinkler systems incorporating the following features:

1. Each floor sprinkler system shall be connected between standpipe risers.
2. Shut-off valves, water-flow devices and check valves (or pressure reducing valves) shall be provided on each floor at the sprinkler system connection to each standpipe.
3. Two four-way fire department connections serving the combination system shall be provided on separate streets well separated from each other.
4. At least one of the fire department connections shall be connected to the riser above a riser isolation valve.
5. When a mid-level fire pump is required to meet pressure requirements, two pumps with the same rating shall be installed.
6. Dry-pipe sprinkler systems serving parking garages may use a separate two-way fire department connection. The dry-pipe sprinkler system shall be supplied by the on-site water tank.
7. The standpipe risers in each required stair shall be a minimum pipe size of 6 inches (152 mm).
8. Two 2½ -inch (64 mm) hose connections shall be provided on every floor level landing in every required stairway. If pressure reducing valves (PRV) are required, each hose connection shall be provided with its own PRV.

9. The system shall be designed to provide a minimum flow of 300 gpm (19 L/s) at a minimum pressure of 150 psi (1034 kPa) [maximum 205 psi (1379 kPa)] at each standpipe connection in addition to the flow and pressure requirements contained in NFPA 14.
10. When a mid-level pump is required to meet pressure requirements, two mid-level pumps with the same rating shall be provided

914.3.1.1.1 Riser location. Sprinkler risers shall be placed in interior *exit stairways* and ramps that are remotely located in accordance with Section 1015.2.

((~~**914.3.1.2 Water supply to required fire pumps.** Required fire pumps shall be supplied by connections to a minimum of two water mains located in different streets. Separate supply piping shall be provided between each connection to the water main and the pumps. Each connection and the supply piping between the connection and the pumps shall be sized to supply the flow and pressure required for the pumps to operate.~~

~~**Exception:** Two connections to the same main shall be permitted provided the main is valved such that an interruption can be isolated so that the water supply will continue without interruption through at least one of the connections.~~))

914.3.2 Secondary water supply. An automatic secondary on-site water supply having a capacity providing the lesser of a net volume of 33,000 gallons or a volume that is not less than the hydraulically calculated sprinkler demand, including the hose stream requirement, shall be provided for high-rise buildings assigned to Seismic Design Category C, D, E or F as determined by the *International Building Code*. An additional fire pump shall not be required for the secondary water supply unless needed to provide the minimum design intake pressure at the suction side of the fire pump supplying the *automatic sprinkler system*. The secondary water

supply shall have a duration of not less than 30 minutes as determined by the occupancy hazard classification in accordance with NFPA 13.

Exception: Existing buildings.

* * *

SECTION 915

CARBON MONOXIDE DETECTION

* * *

[W] 915.1.1 Where required. Carbon monoxide detection shall be provided in Group I ((~~I-1, I-2, I-4~~)) and R occupancies and in classrooms in Group E occupancies in the locations specified in Section 915.2 where any of the conditions in Sections 915.1.2 through 915.1.6 exist.

Exceptions:

1. R-2 occupancies, with the exception of R-2 college dormitories, are required to install carbon monoxide detectors without exception
2. Sleeping units or dwelling units in I and R-1 occupancies and R-2 college dormitories, hotel, DOC prisons and work releases and assisted living facilities and residential treatment facilities licensed by the state of Washington, which do not themselves contain a fuel-burning appliance, a fuel-burning fireplace, or have an attached garage, need not be provided with carbon monoxide alarms provided that they comply with the exceptions of Section 915.1.4.

* * *

915.2 Locations. Where required by Section 915.1.1, carbon monoxide detection shall be installed in the locations specified in Sections 915.2.1 through 915.2.3.

[W] 915.2.1 Dwelling units. Carbon monoxide detection shall be installed in dwelling units outside of each separate sleeping area in the immediate vicinity of the bedrooms and on each

level of the dwelling. Where a fuel-burning appliance or a fuel-burning fireplace is located within a bedroom or its attached bathroom, carbon monoxide detection shall be installed within the bedroom.

[W] 915.2.2 Sleeping units. Carbon monoxide detection shall be installed in *sleeping units*.

Exception: Carbon monoxide detection shall be allowed to be installed outside of each separate sleeping area in the immediate vicinity of the *sleeping unit* where the *sleeping unit* or its attached bathroom does not contain a fuel-burning appliance or a fuel-burning fireplace and is not served by a forced air furnace.

[W] 915.2.3 Group E occupancies. When required by Section 915.1 in new buildings, or by Chapter 11 of the *International Fire Code*, ((~~C~~)) carbon monoxide detection shall be installed in classrooms in Group E occupancies. Carbon monoxide alarm signals shall be automatically transmitted to an on-site location that is staffed by school personnel.

Exceptions:

1. Carbon monoxide alarm signals shall not be required to be automatically transmitted to an on-site location that is staffed by school personnel in Group E occupancies with an occupant load of ((~~30~~)) 50 or less.

2. Carbon monoxide alarm signals shall not be required to be automatically transmitted to an on-site location that is staffed by school personnel in Group E occupancies where an exception contained in Section 915.1 applies, or in Group E occupancies where signals are transmitted to an off-site service monitored by a third party, such as a service that monitors fire protection systems in the building.

* * *

[W] SECTION 916
ALERTING SYSTEMS

916.1 General. An *approved* alerting system shall be provided in buildings and structures as required in Chapter 4 and this section, unless other requirements are provided by another section of this code.

Exception: *Approved* alerting systems in existing buildings, structures or occupancies.

916.2 Power source. Alerting systems shall be provided with power supplies in accordance with Section 4.4.1 of NFPA 72 and circuit disconnecting means identified as "EMERGENCY ALERTING SYSTEM."

Exception: Systems that do not require electrical power to operate.

916.3 Duration of operation. The alerting system shall be capable of operating under nonalarm condition (quiescent load) for a minimum of 24 hours and then shall be capable of operating during an emergency condition for a period of 15 minutes at maximum connected load.

916.4 Combination system. Alerting system components and equipment shall be allowed to be used for other purposes.

916.4.1 System priority. The alerting system use shall take precedence over any other use.

916.4.2 Fire alarm system. Fire alarm systems sharing components and equipment with alerting systems shall be in accordance with Section 6.8.4 of NFPA 72.

916.4.2.1 Signal priority. Recorded or live alert signals generated by an alerting system that shares components with a fire alarm system shall, when actuated, take priority over fire alarm messages and signals.

916.4.2.2 Temporary deactivation. Should the fire alarm system be in the alarm mode when such an alerting system is actuated, it shall temporarily cause deactivation of all fire alarm-initiated audible messages or signals during the time period required to transmit the alert signal.

916.4.2.3 Supervisory signal. Deactivation of fire alarm audible and visual notification signals shall cause a supervisory signal for each notification zone affected in the fire alarm system.

916.5 Audibility. Audible characteristics of the alert signal shall be in accordance with Section 7.4.1 of NFPA 72 throughout the area served by the alerting system.

Exception: Areas served by *approved* visual or textual notification, where the visible notification appliances are not also used as a fire alarm signal, are not required to be provided with audibility complying with Section 916.6.

916.6 Visibility. Visible and textual notification appliances are permitted in addition to *alert signal* audibility.

* * *

Section 11. Chapter 10 of the 2015 International Fire Code is amended as follows:

CHAPTER 10

MEANS OF EGRESS

* * *

SECTION 1003
GENERAL MEANS OF EGRESS

* * *

1003.2 Ceiling height. The *means of egress* shall have a ceiling height of not less than 7 feet 6 inches (2286 mm).

Exceptions:

1. ((~~Sloped ceilings~~)) Ceilings in accordance with Section 1208.2.

((~~2. Ceilings of *dwelling units* and *sleeping units* within residential occupancies in accordance with Section 1208.2.~~))

((~~3~~))2. Allowable projections in accordance with Section 1003.3.

((4))3. *Stair* headroom in accordance with Section 1011.3.

((~~5~~))4. Door height in accordance with Section 1010.1.1.

((~~6~~))5. *Ramp* headroom in accordance with Section 1010.5.2.

((~~7~~))6. The clear height of floor levels in vehicular and pedestrian traffic areas in parking garages in accordance with Section 406.4.1.

((~~8~~))7. Areas above and below *mezzanine* floors in accordance with Section 505.2.

* * *

1003.5 Elevation change. Where changes in elevation of less than 12 inches (305 mm) exist in the *means of egress*, sloped surfaces shall be used. Where the slope is greater than one unit vertical in 20 units horizontal (5-percent slope), *ramps* complying with Section 1010 shall be used. Where the difference in elevation is 6 inches (152 mm) or less, the *ramp* shall be equipped with either *handrails* or floor finish materials that contrast with adjacent floor finish materials.

Exceptions:

1. A single step with a maximum riser height of 7 inches (178 mm) is permitted for buildings with occupancies in Groups F, H, R-2, R-3, S and U at exterior doors not required to be *accessible* by Chapter 11.
2. A *stair* with a single riser or with two risers and a tread is permitted at locations not required to be *accessible* by Chapter 11 and not within a stairway with two or more flights of stairs, provided that the risers and treads comply with Section 1009.7, the minimum depth of the tread is 13 inches (330 mm) and at least one *handrail* complying with Section 1012 is provided within 30 inches (762 mm) of the centerline of the normal path of egress travel on the *stair*.
3. A step is permitted in *aisles* serving seating that has a difference in elevation less than 12 inches (305 mm) at locations not required to be *accessible* by Chapter 11, provided that the

risers and treads comply with Section 1028.11 and the *aisle* is provided with a *handrail* complying with Section 1028.13.

Throughout a story in a Group I-2 occupancy, any change in elevation in portions of the *means of egress* that serve nonambulatory persons shall be by means of a *ramp* or sloped walkway.

* * *

SECTION 1004

OCCUPANT LOAD

* * *

1004.1.2 Areas without fixed seating. The number of occupants shall be computed at the rate of one occupant per unit of area as prescribed in Table 1004.1.2. For areas without *fixed seating*, the occupant load shall not be less than that number determined by dividing the floor area under consideration by the *occupant load* factor assigned to the function of the space as set forth in Table 1004.1.2. Where an intended function is not listed in Table 1004.1.2, the *building official* shall establish a function based on a listed function that most nearly resembles the intended function.

Exception: Where *approved* by the *building official*, the actual number of occupants for whom each occupied space, floor or building is designed, although less than those determined by calculation, shall be permitted to be used in the determination of the design *occupant load.*

TABLE 1004.1.2
MAXIMUM FLOOR AREA ALLOWANCES PER OCCUPANT

FUNCTION OF SPACE	OCCUPANT LOAD FACTOR[a]
Accessory storage areas, mechanical equipment room[1]	300 gross
Agricultural building	300 gross
Aircraft hangars	500 gross
Airport terminal	

Baggage claim	20 gross
Baggage handling	300 gross
Concourse	100 gross
Waiting areas	15 gross
Assembly	
Gaming floors (keno, slots, etc.)	11 gross
Exhibit gallery and museum	30 net
Assembly with fixed seats	See Section 1004.4
Assembly without fixed seats	
Concentrated (chairs only–not fixed)	7 net
Standing space	5 net
Unconcentrated (tables and chairs)	15 net
Bowling centers, allow 5 persons for each lane including 15 feet of runway, and for additional areas	7 net
Business areas Without sprinkler protection With sprinkler protection	 100 gross 130 gross
Commercial laboratories	100 gross
Courtrooms–other than fixed seating areas	40 net
Day care	35 net
Dormitories	50 gross
Educational	
Classroom area	20 net
Shops, laboratories and other vocational room areas	50 net
Exercise rooms	50 gross
Group H-5 Fabrication and manufacturing areas	200 gross
Industrial areas	100 gross
Institutional areas	
Inpatient treatment areas	240 gross
Outpatient areas	100 gross
Sleeping areas	120 gross
Kitchens, commercial	200 gross
Library	
Reading rooms	50 net
Stack area	100 gross
Mall buildings–covered and open	See Section 402.8.2
Mercantile Storage, stock, shipping areas	60 gross 300 gross
Parking garages	200 gross
Residential	200 gross
Skating rinks, swimming pools	
Rink and pool	50 gross

Decks	15 gross
Stages and platforms	15 net
Warehouses	500 gross

For SI: 1 square foot = 0.0929 m^2.

a. Floor area in square feet per occupant.

1. For electrical equipment areas, see also Sections 110.26 and 110.32 through 110-34 of the *Seattle Electrical Code.*

* * *

SECTION 1005

MEANS OF EGRESS SIZING

* * *

1005.2 Minimum width based on component. The minimum width, in inches (mm), of any *means of egress* components shall not be less than that specified for such component, elsewhere in this code. The width at any point in the path of egress travel shall not be less than the width required for doors in Section 1010.

Exceptions:

1. Aisles and aisle accessways complying with Section 1018.

2. Corridors complying with Section 1020.2.

3. Stage stairways and catwalks complying with Section 410.6.

* * *

SECTION 1006

NUMBER OF EXITS AND EXIT ACCESS DOORWAYS

* * *

[BE] 1006.3 Egress from stories or occupied roofs. The *means of egress* system serving any story or occupied roof shall be provided with the number of *exits* or access to *exits* based on the aggregate *occupant load* served in accordance with this section. Horizontal exits shall not count

toward the required number of exits from the story or roof. The path of egress travel to an *exit* shall not pass through more than one adjacent story.

Note: In high-rise buildings required to have an additional exit stairway by Section 403.5.2, all exit stairways must be accessible to all tenants on a floor without having to pass through another tenant space.

* * *

[BE] 1006.3.2 Single exits. A single exit or access to a single exit shall be permitted from any story or occupied roof, where one of the following conditions exists:

1. The occupant load, number of dwelling units and exit access travel distance within the portion of the building served by the single exit do not exceed the values in Table 1006.3.2(1) or 1006.3.2(2).

2. Rooms, areas and spaces complying with Section 1006.2.1 with exits that discharge directly to the exterior at the level of exit discharge, are permitted to have one exit or access to a single exit.

3. Parking garages where vehicles are mechanically parked shall be permitted to have one exit or access to a single exit.

4. Group R-3 and R-4 occupancies shall be permitted to have one exit or access to a single exit.

5. Individual single-story or multistory dwelling units shall be permitted to have a single exit or access to a single exit from the dwelling unit provided that both of the following criteria are met:

5.1. The dwelling unit complies with Section 1006.2.1 as a space with one means of egress.

5.2. Either the exit from the dwelling unit discharges directly to the exterior at the level of exit discharge, or the exit access outside the dwelling unit's entrance door provides access to not less than two approved independent exits.

6. Occupied roofs with an occupant load of ten or less are permitted to have a single exit or access to a single exit.

7. Not more than 5 stories of Group R-2 occupancy are permitted to be served by a single exit under the following conditions:

7.1 The building has not more than six stories above grade plane.

7.2 The building does not contain a boarding house.

7.3 There shall be no more than four dwelling units on any floor.

7.4 The building shall be of not less than one-hour fire-resistive construction and shall also be equipped throughout with an automatic sprinkler system in accordance with Section 903.3.1.1. Residential-type sprinklers shall be used in all habitable spaces in each dwelling unit.

7.5 There shall be no more than two single exit stairway conditions on the same property.

7.6 An exterior stairway or interior exit stairway shall be provided. The interior exit stairway, including any related exit passageway, shall be pressurized in accordance with Section 909.20. Doors in the stairway shall swing into the interior exit stairway regardless of the occupant load served, provided that doors from the interior exit stairway to the building exterior are permitted to swing in the direction of exit travel.

7.7 A corridor shall separate each dwelling unit entry/exit door from the door to an interior exit stairway, including any related exit passageway, on each floor. Dwelling unit doors shall not open directly into an interior exit stairway. Dwelling unit doors are permitted to open directly into an exterior stairway.

7.8 There shall be no more than 20 feet (6096 mm) of travel to the exit stairway from the entry/exit door of any dwelling unit.

7.9 Travel distance measured in accordance with Section 1017 shall not exceed 125 feet. 7.10 The exit shall not terminate in an egress court where the court depth exceeds the court width unless it is possible to exit in either direction to the public way. 7.11 Elevators shall be pressurized in accordance with Section 909.21 or shall open into elevator lobbies that comply with Section 713.14.1. Where approved by the building official, natural ventilation is permitted to be substituted for pressurization where the ventilation would prevent the accumulation of smoke or toxic gases.

7.12 Other occupancies are permitted in the same building provided they comply with all the requirements of this code. Other occupancies shall not communicate with the Group R occupancy portion of the building or with the single-exit stairway.

Exception: Parking garages accessory to the Group R occupancy are permitted to communicate with the exit stairway.

7.13 The exit serving the Group R occupancy shall not discharge through any other occupancy, including an accessory parking garage.

7.14 There shall be no openings within 10 feet (3048 mm) of unprotected openings into the stairway other than required exit doors having a one-hour fire-resistance rating.

* * *

SECTION 1007

EXIT AND ACCESS DOORWAY CONFIGURATION

1007.1 General. Exits, exit access doorways, and exit access stairways and ramps serving spaces, including individual building stories, shall be separated in accordance with the provisions of this section. Interlocking or scissor stairs and stairways that share a wall with other interior exit stairways shall be counted as one exit or exit access.

1007.1.1 Two exits or exit access doorways. Where two exits, exit access doorways, exit access stairways or ramps, or any combination thereof, are required from any portion of the exit access, they shall be placed a distance apart equal to not less than one-half of the length of the maximum overall diagonal dimension of the building or area to be served measured in a straight line between them. ((~~Interlocking or scissor stairways shall be counted as one exit stairway.~~))

Exceptions:

1. Where interior exit stairways or ramps are interconnected by a 1-hour fire-resistance-rated corridor conforming to the requirements of Section 1020, the required exit separation shall be measured along the shortest direct line of travel within the corridor.

> **Interpretation I1007.1:** Exception 1 applies only where corridors have a one-hour fire-resistance-rating even where Section 1020 would allow non-rated corridors.

2. Where a building is equipped throughout with an automatic sprinkler system in accordance with Section 903.3.1.1 or 903.3.1.2, the separation distance shall be not less than one-third of the length of the maximum overall diagonal dimension of the area served.

3. Where it is not practical to separate exits by one-half the diagonal dimension, exits from retail and office tenant spaces in Group B and M occupancies and within dwelling units shall be as far apart as reasonably practicable as determined by the building official.

1007.1.1.1 Measurement point. The separation distance required in Section 1007.1.1 shall be measured in accordance with the following:

1. The separation distance to exit or exit access doorways shall be measured to any point along the width of the doorway.

2. The separation distance to exit access stairways shall be measured to any point along the width of the closest riser.

3. The separation distance to exit access ramps shall be measured to any point along the width of the start of the ramp run.

Interpretation I1007.1.1.1: In items 1-3, separation distance is permitted to be measured to the farthest point.

* * *

SECTION 1008

MEANS OF EGRESS ILLUMINATION

1008.1 Means of egress illumination. Illumination shall be provided at every point in the means of egress in accordance with Section 1008.2. Under emergency power, means of egress illumination shall comply with Section 1008.3.

1008.2 Illumination required. The means of egress serving a room or space shall be illuminated at all times that the room or space is occupied.

Exceptions:

1. Occupancies in Group U.
2. Aisle accessways in Group A.
3. Dwelling units and sleeping units in Groups R-1, R-2 and R-3.
4. Sleeping units of Group I occupancies.

1008.2.1 Illumination level under normal power. The means of egress illumination level shall be not less than 1 footcandle (11 lux) at the walking surface. Luminaires shall be installed whenever exit signs are required by Section 1013.

Code Alternate CA1008.2: Compliance with the following paragraphs will be deemed to satisfy the requirement for means of egress illumination at every point in the means of egress. Means of egress illumination systems that comply with this Code Alternate shall also comply with Section 1006.3

1. **Location and fixture placement**. Means of egress illumination shall be located in stairways, corridors, halls, passenger elevator cars, lobbies, rooms with an occupant load of

100 or more, and other areas required to provide safe egress from the premises and immediately outside of the building exit when required by the building official. Fixtures shall be installed to not less than the following schedule:

1.1 Interior and exterior stairways and landings and outside building exit	At least one per landing
1.2 Corridors and halls and designated means of egress paths in parking garages	At least one for each 40 lineal feet
1.3 Lobbies, vestibules, foyers, elevator cars and other similar areas as required	At least one for each 250 square feet
1.4 Warehouses	See Item 2 below.

These fixtures are permitted to be included in the watts per square foot calculation for means of egress illumination.

2. **Amount of Illumination**. Where means of egress illumination is required, illumination shall be provided at the rate of 0.1 watt of fluorescent illumination per square foot of area. Installations using incandescent lamps shall have a minimum wattage of at least 3 times the fluorescent requirements. Use of other light sources is subject to the approval of the building official.

Exceptions:

1. In warehouses, the allowable minimum illumination is permitted to be 0.1 watt per square foot (0.03 watts for fluorescent) provided fixtures are placed either:

1.1 Where means of egress pathways are not designated, fixtures shall be placed to cover an area not larger than 1,600 square feet, or

1.2 Where means of egress pathways are designated, fixtures shall be placed at least one for every 40 lineal feet.

2. In theaters, auditoriums or other places of assembly where motion pictures or other projections are made by means of directed light, the minimum allowable illumination is permitted to be reduced to 0.05 watts per square foot of floor area (0.02 watts for fluorescent). The higher level of required illumination shall be automatically restored upon activation of a premises fire alarm system where such system is provided.

3. In Groups B, F-1, M and S-1 occupancies, when approved by the building official, the minimum allowable illumination is permitted to be reduced to 0.05 watts per square foot (0.02 watts for fluorescent) of floor area.

4. In Group B occupancies and open parking garages, when approved by the building official, the illumination is permitted to be eliminated when within 50 feet of a window wall or open side and where light is not totally obscured.

Means of egress illumination fixtures shall be spaced and designed to give adequate distribution of light for safe egress and so that the failure of any individual lighting element, such as the burning out of a light bulb, will not leave any space in total darkness. Illumination from battery operated fixtures shall provide the same level of illumination required for hard-wired fixtures.

1008.3 Power supply ((~~**Emergency power**~~)) for illumination. The power supply for means of egress illumination shall normally be provided by the premises' electrical supply.

1008.3.1 General. In the event of power supply failure in rooms and spaces that require two or more means of egress, an emergency ((~~electrical~~)) power system shall automatically illuminate all of the following areas:

1. Aisles.
2. Corridors.
3. Exit access stairways and ramps.

* * *

SECTION 1009

ACCESSIBLE MEANS OF EGRESS

[W] **1009.1 Accessible means of egress required.** *Accessible means of egress* shall comply with this section. *Accessible* spaces shall be provided with not less than one *accessible means of egress*. Where more than one *means of egress* are required by Section 1006.2 or 1006.3 from any *accessible* space, each *accessible* portion of the space shall be served by not less than two *accessible means of egress*.

Exceptions:

1. *Accessible means of egress* are not required to be provided in existing buildings.
2. One *accessible means of egress* is required from an *accessible mezzanine* level in accordance with Section 1009.3, 1009.4 or 1009.5.
3. In assembly areas with sloped or stepped *aisles*, one *accessible means of egress* is permitted where the common path of travel is *accessible* and meets the requirements in Section 1029.8.

4. In parking garages, *accessible means of egress* are not required to serve parking areas that do not contain *accessible* parking spaces.

1009.2 Continuity and components. Each required *accessible means of egress* shall be continuous to a *public way* and shall consist of one or more of the following components:

1. *Accessible* routes complying with Section 1104.
2. *Interior exit stairways* complying with Sections 1009.3 and 1023.
3. *Exit access stairways* complying with Sections 1009.3 and 1019.3 or 1019.4.
4. Exterior *exit stairways* complying with Sections 1009.3 and 1027 and serving levels other than the *level of exit discharge*.

Interpretation I1009.2a: An exit passageway is not required on the level of exit discharge to connect the elevator with the exterior exit door.

5. Elevators complying with Section 1009.4.
6. Platform lifts complying with Section 1009.5.
7. Horizontal exits complying with Section 1026.
8. Ramps complying with Section 1012.
9. *Areas of refuge* complying with Section 1009.6.
10. Exterior area for assisted rescue complying with Section 1009.7.

1009.2.1 Elevators required. In buildings where a required *accessible* floor is four or more stories above or below a *level of exit discharge*, at least one required *accessible means of egress* shall be an elevator complying with Section 1007.4.

Interpretation I1009.2b: The level of exit discharge is not counted when determining whether an accessible floor is four stories above or below a level of exit discharge. See Figure 1009.2.b.

Exceptions:

1. In buildings equipped throughout with an *automatic sprinkler system* installed in accordance with Section 903.3.1.1 or 903.3.1.2, the elevator shall not be required on floors provided with a *horizontal exit* and located at or above the *levels of exit discharge*.
2. In buildings equipped throughout with an *automatic sprinkler system* installed in accordance with Section 903.3.1.1 or 903.3.1.2, the elevator shall not be required on floors provided with a *ramp* conforming to the provisions of Section 1012.

Interpretation I1009.2c: In exception 2, the ramp shall be part of an accessible means of egress.

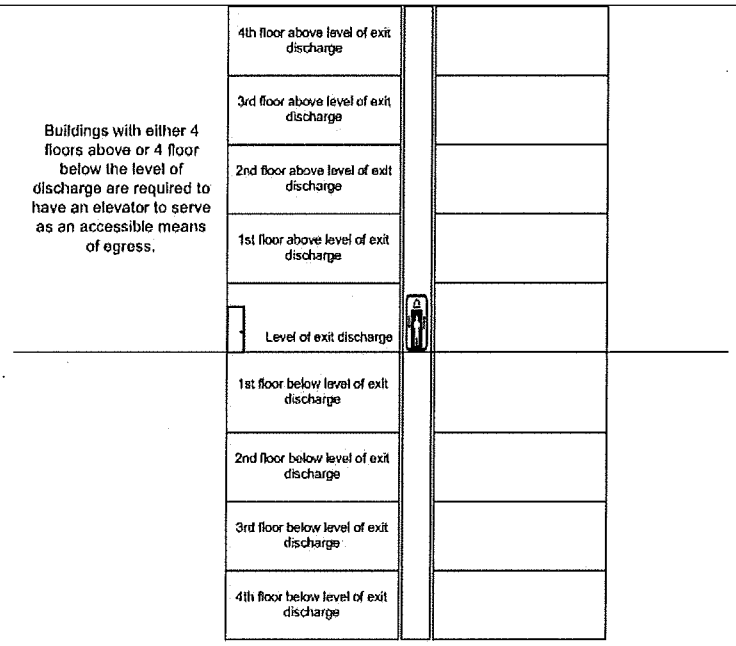

Figure 1007.2b

* * *

1009.4 Elevators. In order to be considered part of an *accessible means of egress*, an elevator shall comply with the emergency operation and signaling device requirements of Section 2.27 of ASME A17.1. ((~~Standby~~)) A legally required standby power system shall be provided in accordance with Chapter 27 of the Seattle Building Code and ((~~Section 3003~~)) the Seattle Electrical Code for operation of the elevator, the shunt trip and lighting for elevator cars, control

rooms, machine rooms, and machinery spaces in accordance with Chapter 27. The elevator shall be accessed from either an *area of refuge* complying with Section 1009.6 or a *horizontal exit*.

Exceptions:

1. *Areas of refuge* are not required at the elevator in *open parking garages*.
2. *Areas of refuge* are not required in buildings and facilities equipped throughout with an *automatic sprinkler system* installed in accordance with Section 903.3.1.1 or 903.3.1.2.
3. *Areas of refuge* are not required to be located in a shaft in accordance with Section 712.
4. *Areas of refuge* are not required for elevators accessed from a refuge area in conjunction with a *horizontal exit*.

1009.5 Platform lifts. Platform lifts shall be permitted to serve as part of an accessible means of egress where allowed as part of a required accessible route in Section 1109.8 except for Item 10. ((~~Standby~~)) A legally required standby power system for the platform lift shall be provided in accordance with Chapter 27.

* * *

[W] **1009.8.1 System requirements.** Two-way communication systems shall provide communication between each required location and the fire command center or a central control point location *approved* by the fire department. Where the central control point is not constantly attended, a two-way communication system shall have a timed automatic telephone dial-out capability to a monitoring location ((~~or 9-1-1~~)). The two-way communication system shall include both audible and visible signals. The two-way communication system shall have a battery backup or an approved alternate source of power that is capable of 90 minutes use upon failure of the normal power source.

* * *

SECTION 1010

DOORS, GATES AND TURNSTILES

1010.1 Doors. *Means of egress* doors shall meet the requirements of this section. Doors serving a *means of egress* system shall meet the requirements of this section and Section 1020.2. Doors provided for egress purposes in numbers greater than required by this code shall meet the requirements of this section. See Section 3201 for doors swinging over public property.

* * *

1010.1.5 Floor elevation. There shall be a floor or landing on each side of a door. Such floor or landing shall be at the same elevation on each side of the door. Landings shall be level except for exterior landings, which are permitted to have a slope not to exceed 0.25 unit vertical in 12 units horizontal (2-percent slope).

Exceptions:

1. Doors serving individual *dwelling units* in Groups R-2 and R-3 where the following apply:
   1.1. A door is permitted to open at the top step of a((~~n interior~~)) *flight* of *stairs*, provided the door does not swing over the top step.
   1.2. Screen doors and storm doors are permitted to swing over *stairs* or landings.
2. Exterior doors as provided for in Section 1003.5, Exception 1, and Section 1022.2, which are not on an accessible route.
3. In Group R-3 occupancies not required to be Accessible units, Type A units or Type B units, the landing at an exterior doorway shall not be more than 7-3/4 inches (197 mm) below the top of the threshold, provided the door, other than an exterior storm or screen door, does not swing over the landing.

4. Variations in elevation due to differences in finish materials, but not more than 1/2 inch (12.7 mm).

5. Exterior decks, patios or balconies that are part of Type B dwelling units, have impervious surfaces and that are not more than 4 inches (102 mm) below the finished floor level of the adjacent interior space of the dwelling unit.

1010.1.6 Landings at doors. Landings shall have a width not less than the width of the *stairway* or the door, whichever is greater. Doors in the fully open position shall not reduce a required dimension by more than 7 inches (178 mm). When a landing serves an *occupant load* of 50 or more, doors in any position shall not reduce the landing to less than one-half its required width. When doors open over landings, doors in any position shall not reduce the landing length to less than 12 inches (305 mm). Landings shall have a length measured in the direction of travel of not less than 44 inches (1118 mm).

Exception: Landing length in the direction of travel in Groups R-3 and U and within individual units of Group R-2 need not exceed 36 inches (914 mm).

Interpretation I1010.1.6: Landing length, width and slope shall be measured as specified in Section 1011.6 and 1011.7.1. See Figures 1010.1.6(1), 1010.1.6(2) and 1010.1.6(3) for illustrations of the requirements of this section.

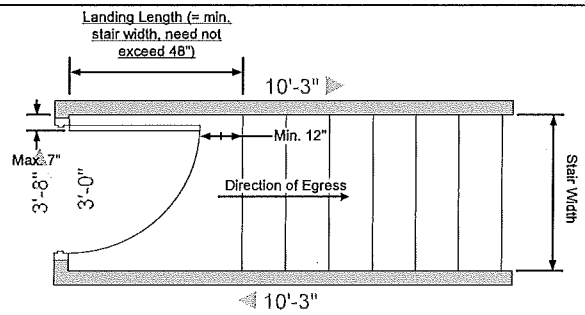

Figure 1008.1.6(1)
(Landing Dimensions Only)

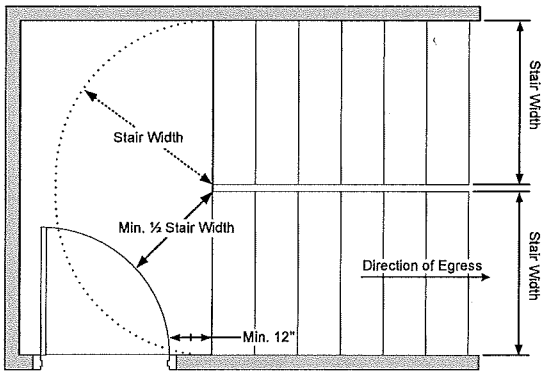

Figure 1008.1.6(2)
(Landing Dimensions Only)

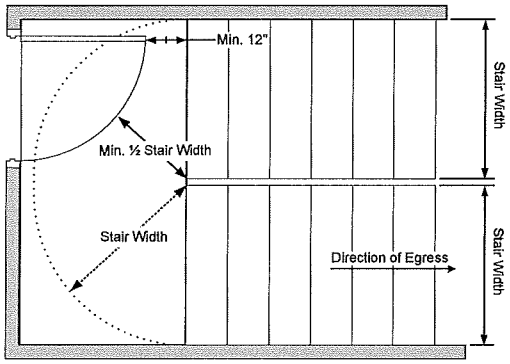

Figure 1008.1.6(3)
(Landing Dimensions Only)

1010.1.7 Thresholds. Thresholds at doorways shall not exceed 3/4 inch (19.1 mm) in height above the finished floor or landing for sliding doors serving *dwelling units* or 1/2 inch (12.7 mm) above the finished floor or landing for other doors. Raised thresholds and floor level changes greater than 1/4 inch (6.4 mm) at doorways shall be beveled with a slope not greater than one unit vertical in two units horizontal (50-percent slope).

Exception: In occupancy Group R-2 or R-3, threshold heights for sliding and side-hinged exterior doors shall be permitted to be up to 7-3/4 inches (197 mm) in height if all of the following apply:

1. The door is not part of the required *means of egress*.

2. The door is not part of an *accessible route* as required by Chapter 11.

3. The door is not part of an *Accessible unit*, *Type A unit* or *Type B unit*.

1010.1.8 Door arrangement. Space between two doors in a series shall be 48 inches (1219 mm) minimum plus the width of a door swinging into the space. Doors in a series shall swing either in the same direction or away from the space between the doors.

Exceptions:

1. The minimum distance between horizontal sliding power-operated doors in a series shall be 48 inches (1219 mm).
2. Storm and screen doors serving individual *dwelling units* in Groups R-2 and R-3 need not be spaced 48 inches (1219 mm) from the other door.
3. Doors within individual *dwelling units* in Groups R-2 and R-3 other than within *Type A* dwelling units.

1010.1.9 Door operations. Except as specifically permitted by this section egress doors shall be readily openable from the egress side without the use of a key or special knowledge or effort.

Note: Stairway doors shall also comply with Section 1010.1.9.11.

1010.1.9.1 Hardware. Door handles, pulls, latches, locks and other operating devices on doors required to be *accessible* by Chapter 11 shall not require tight grasping, tight pinching or twisting of the wrist to operate.

1010.1.9.2 Hardware height. Door handles, pulls, latches, locks and other operating devices shall be installed 34 inches (864 mm) minimum and 48 inches (1219 mm) maximum above the finished floor. Locks used only for security purposes and not used for normal operation are permitted at any height.

Exception: Access doors or gates in barrier walls and fences protecting pools, spas and hot tubs shall be permitted to have operable parts of the release of latch on self-latching devices at 54 inches (1370 mm) maximum above the finished floor or ground, provided the self-latching devices are not also self-locking devices operated by means of a key, electronic opener or integral combination lock.

1010.1.9.3 Locks and latches. Locks and latches shall be permitted to prevent operation of doors where any of the following exists:

1. Places of detention or restraint as approved by the building official.
2. In buildings in occupancy Group A having an *occupant load* of 300 or less, Groups B, F, M and S, and in *places of religious worship*, the main exterior door or doors are permitted to be equipped with key-operated locking devices from the egress side provided:
   - 2.1. The locking device is readily distinguishable as locked;
   - 2.2. A readily visible durable sign is posted on the egress side on or adjacent to the door stating: THIS DOOR TO REMAIN UNLOCKED ((~~WHEN BUILDING IS OCCUPIED~~)) DURING BUSINESS HOURS. The sign shall be in letters 1 inch (25 mm) high on a contrasting background; and
   - 2.3. The use of the key-operated locking device is revokable by the *building official* for due cause.
3. Where egress doors are used in pairs, *approved* automatic flush bolts shall be permitted to be used, provided that the door leaf having the automatic flush bolts has no doorknob or surface-mounted hardware on the egress side of the door.

4. Doors from individual *dwelling* or *sleeping units* of Group R occupancies having an *occupant load* of 10 or less are permitted to be equipped with a night latch, dead bolt or security chain, provided such devices are openable from the inside without the use of a key or tool.

5. *Fire doors* after the minimum elevated temperature has disabled the unlatching mechanism in accordance with listed fire door test procedures.

[W] 6. Approved, listed locks without delayed egress shall be permitted in Group R-2 boarding homes licensed by Washington state, provided that:

6.1. The clinical needs of one or more patients require specialized security measures for their safety.

6.2. The doors unlock upon actuation of the automatic sprinkler system or automatic fire detection system.

6.3. The doors unlock upon loss of electrical power controlling the lock or lock mechanism.

6.4. The lock shall be capable of being deactivated by a signal from a switch located in an approved location.

6.5. There is a system, such as a keypad and code, in place that allows visitors, staff persons and appropriate residents to exit. Instructions for exiting shall be posted within six feet of the door.

7. Doors from elevator lobbies providing access to exits are permitted to be locked during or after business hours where items 7.1 through 7.5 are satisfied.

7.1. The lobby doors shall unlock automatically upon fire alarm.

7.2. The lobby doors shall unlock automatically upon power loss.

7.3. The alarm system shall include smoke detection in the elevator lobby and at least two detectors on the tenant side within 15 feet of the door;

7.4. Access through the tenant portion of the building to both exits shall be unobstructed; and

7.5. The building shall have an automatic sprinkler system throughout in accordance with Section 903.3.1.1 or 903.3.1.2.

1010.1.9.4 Bolt locks. Manually operated flush bolts or surface bolts are not permitted.

Exceptions:

1. On doors not required for egress in individual dwelling units or sleeping units.
2. Where a pair of doors serves a storage or equipment room, manually operated edge- or surface-mounted bolts or self-latching flush bolts are permitted on the inactive leaf.
3. Where a pair of doors serves an *occupant load* of less than 50 persons in a Group B, F or S occupancy, manually operated edge- or surface-mounted bolts are permitted on the inactive leaf. The inactive leaf shall contain no doorknobs, panic bars or similar operating hardware.
4. Where a pair of doors serves a Group B, F or S occupancy, manually operated edge- or surface-mounted bolts are permitted on the inactive leaf provided such inactive leaf is not needed to meet egress width requirements and the building is equipped throughout with an *automatic sprinkler system* in accordance with Section 903.3.1.1. The inactive leaf shall contain no doorknobs, panic bars or similar operating hardware.
5. Where a pair of doors serves patient care rooms in Group I-2 occupancies, self-latching edge- or surface-mounted bolts are permitted on the inactive leaf provided that the inactive leaf is not needed to meet egress width requirements and the inactive leaf contains no doorknobs, panic bars or similar operating hardware.

1010.1.9.5 Unlatching. The unlatching of any door or leaf shall not require more than one operation.

Exceptions:

1. Places of detention or restraint.
2. Where manually operated bolt locks are permitted by Section 1010.1.9.4.
3. Doors with automatic flush bolts as permitted by Section 1010.1.9.3, Exception 3.
4. Doors from individual dwelling units and sleeping units of Group R occupancies as permitted by Section 1008.1.9.3, Exception 4.

[W] ((~~**1010.1.9.5.1 Closet and bathroom doors in Group R-4 occupancies.** In Group R-4 occupancies, closet doors that latch in the closed position shall be openable from inside the closet, and bathroom doors that latch in the closed position shall be capable of being unlocked from the ingress side.~~))

[W] 1010.1.9.6 Controlled egress doors in Groups I-1 and I-2. Electric locking systems, including electromechanical locking systems and electromagnetic locking systems, shall be permitted to be locked in the means of egress in Group I-1 or I-2 occupancies where the clinical needs of persons receiving care require their containment. Controlled egress doors shall be permitted in such occupancies where the building is equipped throughout with an automatic sprinkler system in accordance with Section 903.3.1.1 or an approved automatic smoke or heat detection system installed in accordance with Section 907, provided that the doors are installed and operate in accordance with all of the following:

1. The door locks shall unlock upon actuation of the *automatic sprinkler system* or *automatic fire detection system*.
2. The door locks shall unlock upon loss of power controlling the lock or lock mechanism.
3. The door locking system shall have the capability of being unlocked by a signal from the *fire command center*, a nursing station or other *approved* location.

4. A building occupant shall not be required to pass through more than one door equipped with a special egress lock before entering an *exit*.

5. The procedures for unlocking the doors shall be described and *approved* as part of the emergency planning and preparedness required by Chapter 4 of the *International Fire Code*.

6. There is a system, such as a keypad and code, in place that allows visitors, staff persons and appropriate residents to exit. Instructions for exiting shall be posted within six feet of the door.

((~~6. All clinical staff shall have the keys, codes or other means necessary to operate the locking devices.~~))

7. Emergency lighting shall be provided at the door.

8. The door locking system units shall be listed in accordance with UL 294.

Exception: Items 1 through 4 and 6 shall not apply to doors to areas occupied by persons who, because of clinical needs, require restraint or containment as part of the function of a psychiatric treatment area provided that all clinical staff shall have the keys, codes or other means necessary to operate the locking devices.

1010.1.9.7 Delayed egress. Delayed egress locking systems shall be permitted to be installed on doors serving any occupancy except Group A, E and H occupancies in buildings that are equipped throughout with an *automatic sprinkler system* in accordance with Section 903.3.1.1 or an *approved* automatic smoke or heat detection system installed in accordance with Section 907, provided that the doors unlock in accordance with Items 1 through 6 below. Delayed egress locks are permitted in libraries in both Group A and E occupancies in locations other than at main exit doors, and in Group E day care occupancies. The locking system shall be installed and operated in accordance with all of the following:

* * *

1010.1.9.9 Electromagnetically locked egress doors. Doors in the *means of egress* in buildings with an occupancy in Group A, B, E, I-1, I-2, I-4, M, R-1 or R-2, and doors to tenant spaces in Group A, B, E, I-1, I-2, I-4, M, R-1 or R-2, shall be permitted to be electromagnetically locked if equipped with listed hardware that incorporates a built-in switch and meet the requirements below:

1. The listed hardware ((~~that~~)) is affixed to the door leaf <u>and</u> has an obvious method of operation that is readily operated under all lighting conditions.
2. The hardware is capable of being operated with one hand <u>without special knowledge, keys or tools.</u>
3. Operation of the hardware directly interrupts the power to the electromagnetic lock and unlocks the door immediately.
4. Loss of power to the listed hardware automatically unlocks the door.
5. Where panic or *fire exit hardware* is required by Section 1010.1.10, operation of the listed panic or *fire exit hardware* also releases the electromagnetic lock.
6. The locking system units shall be listed in accordance with UL 294.

1010.1.9.10 Locking arrangements in correctional facilities. In occupancies in Groups A-2, A-3, A-4, B, E, F, I-2, I-3, M and S within correctional and detention facilities, doors in *means of egress* serving rooms or spaces occupied by persons whose movements are controlled for security reasons shall be permitted to be locked when equipped with egress control devices which shall unlock manually and by at least one of the following means:

1. Activation of an *automatic sprinkler system* installed in accordance with Section 903.3.1.1;
2. Activation of an *approved* manual alarm box; or
3. A signal from a *constantly attended location.*

1010.1.9.11 Stairway doors. Interior *stairway means of egress* doors shall be openable from both sides without the use of a key or special knowledge or effort.

Exceptions:

1. *Stairway* discharge doors shall be openable from the egress side and shall only be locked from the opposite side.
2. This section shall not apply to doors arranged in accordance with Section 403.5.3.
3. In *stairways* serving not more than four stories, doors are permitted to be locked from the side opposite the egress side, provided they are openable from the egress side and capable of being unlocked simultaneously without unlatching upon a signal from the fire command center, if present, or a signal by emergency personnel from a single location inside the main entrance to the building.
4. *Stairway exit* doors shall be openable from the egress side and shall only be locked from the opposite side in Group B, F, M and S occupancies where the only interior access to the tenant space is from a single *exit stair* where permitted in Section 1021.2.
5. *Stairway exit* doors shall be openable from the egress side and shall only be locked from the opposite side in Group R-2 occupancies where the only interior access to the dwelling unit is from a single *exit stair* where permitted in Section 1021.2.
6. <u>In *stairways* serving more than four stories in non-high-rise buildings, doors are permitted to be locked from the side opposite the egress side, provided they are openable from the egress side and capable of being unlocked simultaneously without unlatching upon a signal from the fire command center, if present, or a signal by emergency personnel from a single location inside the main entrance to the building. A communication system that complies with Section 403.5.3.1 shall be provided.</u>

* * *

SECTION 1011

STAIRWAYS

* * *

1011.2 Width and capacity. The required capacity of stairways shall be determined as specified in Section 1005.1, but the minimum width shall be not less than 44 inches (1118 mm). See Section 1009.3 for accessible means of egress stairways.

Exceptions:

1. Stairways serving an occupant load of less than 50 shall have a width of not less than 36 inches (914 mm).

2. Spiral stairways as provided for in Section 1011.10.

3. Where an incline platform lift or stairway chairlift is installed on stairways serving occupancies in Group R-3, or within dwelling units in occupancies in Group R-2, a clear passage width not less than 20 inches (508 mm) shall be provided. Where the seat and platform can be folded when not in use, the distance shall be measured from the folded position.

<u>4. Stairways that are designed exclusively for circulation.</u>

* * *

1011.5.2 Riser height and tread depth. Stair riser heights shall be 7 inches (178 mm) maximum and 4 inches (102 mm) minimum. The riser height shall be measured vertically between the nosings of adjacent treads. Rectangular tread depths shall be 11 inches (279 mm) minimum measured horizontally between the vertical planes of the foremost projection of adjacent treads and at a right angle to the tread's nosing. Winder treads shall have a minimum tread depth of 11 inches (279 mm) between the vertical planes of the foremost projection of adjacent treads at the

intersections with the walkline and a minimum tread depth of 10 inches (254 mm) within the clear width of the stair.

Exceptions:

1. Spiral stairways in accordance with Section 1011.10.

2. Stairways connecting stepped aisles to cross aisles or concourses shall be permitted to use the riser/tread dimension in Section 1029.13.2.

3. In Group R-3 occupancies; within dwelling units in Group R-2 occupancies; and in Group U occupancies that are accessory to a Group R-3 occupancy or accessory to individual dwelling units in Group R-2 occupancies; the maximum riser height shall be 73/4 inches (197 mm); the minimum tread depth shall be 10 inches (254 mm); the minimum winder tread depth at the walkline shall be 10 inches (254 mm); and the minimum winder tread depth shall be 6 inches (152 mm). A nosing projection not less than 3/4 inch (19.1 mm) but not more than 11/4 inches (32 mm) shall be provided on stairways with solid risers where the tread depth is less than 11 inches (279 mm).

4. See ((~~Section 403.1 of~~)) the International Existing Building Code for the replacement of existing stairways.

5. In Group I-3 facilities, stairways providing access to guard towers, observation stations and control rooms, not more than 250 square feet (23 m2) in area, shall be permitted to have a maximum riser height of 8 inches (203 mm) and a minimum tread depth of 9 inches (229 mm).

* * *

1011.5.4.1 Nonuniform height risers. Where the bottom or top riser adjoins a sloping public way, walkway or driveway having an established grade and serving as a landing, the bottom or top riser is permitted to be reduced along the slope. ((~~to less than 4 inches (102 mm) in height,~~

~~with the variation in height of the bottom or top riser not to exceed one unit vertical in 12 units horizontal (8-percent slope) of stair width. The nosings or leading edges of treads at such nonuniform height risers shall have a distinctive marking stripe, different from any other nosing marking provided on the stair flight. The distinctive marking stripe shall be visible in descent of the stair and shall have a slip-resistant surface. Marking stripes shall have a width of not less than 1 inch (25 mm) but not more than 2 inches (51 mm).~~))

* * *

1011.8 Vertical rise. A flight of stairs shall not have a vertical rise greater than 12 feet (3658 mm) between floor levels or landings.

Exceptions:

1. Spiral stairways used as a means of egress from technical production areas.

2. Stairways that are designed exclusively for circulation.

* * *

1011.12 Stairway to roof. In buildings four or more stories above *grade plane*, one *stairway* shall extend to the roof surface unless the roof has a slope steeper than four units vertical in 12 units horizontal (33- percent slope).

Exceptions:

1. Other than where required by Section 1011.12.1, in buildings without an occupied roof, access to the roof from the top story shall be permitted to be by an *alternating tread device*, a ships ladder or a permanent ladder.

2. Access to the roof is not required in Group R-3 occupancies.

1011.12.1 Stairway to elevator equipment. Roofs and penthouses containing elevator equipment that must be accessed for maintenance are required to be accessed by a stairway.

1011.12.2 Roof access. Where a stairway is provided to a roof, access to the roof shall be provided through a penthouse complying with Section 1510.2.

Exception: In buildings without an occupied roof, access to the roof shall be permitted to be a roof hatch or trap door not less than 16 square feet (1.5 m2) in area and having a minimum dimension of 2 feet 6 inches (((~~610~~))) 762 mm).

* * *

[W] 1011.17 Stairways in individual dwelling units. Stairs or ladders within individual dwelling units used for access to areas of 200 square feet (18.6 m2) or less which do not contain the primary bathroom or kitchen are exempt from the requirements of Section 1011.

* * *

SECTION 1012

RAMPS

[W] 1012.1 Scope. The provisions of this section shall apply to *ramps* used as a component of a *means of egress*.

Exceptions:

1. Ramped aisles within assembly rooms or spaces shall comply with the provisions in Section 1029.
2. Curb ramps shall comply with ICC A117.1.
3. Vehicle ramps in parking garages for pedestrian *exit access* shall not be required to comply with Sections 1012.3 through 1012.10 when they are not an *accessible route* serving *accessible* parking spaces, other required *accessible* elements or part of an *accessible means of egress*.

4. In a parking garage where one accessible means of egress serving accessible parking spaces or other accessible elements is provided, a second accessible means of egress serving that area shall be permitted to include a vehicle ramp that does not comply with Sections 1012.4, 1012.5 and 1012.8. A landing complying with Sections 1012.6.1 and 1012.6.4 shall be provided at any change of direction in the accessible means of egress.

* * *

SECTION 1013

EXIT SIGNS

1013.1 Where required. *Exits* and *exit access* doors shall be marked by an *approved* exit sign readily visible from any direction of egress travel. The path of egress travel to *exits* and within *exits* shall be marked by readily visible exit signs to clearly indicate the direction of egress travel in cases where the *exit* or the path of egress travel is not immediately visible to the occupants. Intervening *means of egress* doors within *exits* shall be marked by exit signs. Exit sign placement shall be such that no point in an *exit access corridor* or *exit passageway* is more than 100 feet (30 480 mm) or the *listed* viewing distance for the sign, whichever is less, from the nearest visible *exit* sign. Exit signs shall be located at any other location determined by the building official to be necessary to clearly indicate the direction of egress.

Exceptions:

1. Exit signs are not required in rooms or areas that require only one *exit* or *exit access* other than in buildings designed with a single exit stairway according to Section 1006.3.2 item 7.
2. Main exterior *exit* doors or gates that are obviously and clearly identifiable as *exits* need not have exit signs where *approved* by the *building official*.

3. Exit signs are not required in occupancies in Group U and individual *sleeping units* or *dwelling units* in Group R-1, R-2 or R-3.

4. Exit signs are not required in dayrooms, sleeping rooms or dormitories in occupancies in Group I-3.

5. In occupancies in Groups A-4 and A-5, exit signs are not required on the seating side of vomitories or openings into seating areas where exit signs are provided in the concourse that are readily apparent from the vomitories. Egress lighting is provided to identify each vomitory or opening within the seating area in an emergency.

6. Exit signs are not required on exterior stairways serving exterior exit balconies.

* * *

1013.6 Externally illuminated exit signs. Externally illuminated exit signs shall comply with Sections 1013.6.1 through 1013.6.3.

1013.6.1 Graphics. Every exit sign and directional exit sign shall have plainly legible letters not less than 6 inches (152 mm) high with the principal strokes of the letters not less than 3/4 inch (19.1 mm) wide.

The word "EXIT" shall have letters having a width not less than 2 inches (51 mm) wide, except the letter "I," and the minimum spacing between letters shall not be less than 3/8 inch (9.5 mm). Signs larger than the minimum established in this section shall have letter widths, strokes and spacing in proportion to their height.

The word "EXIT" shall be in high contrast with the background and shall be clearly discernible when the means of exit sign illumination is or is not energized. If a chevron directional indicator is provided as part of the exit sign, the construction shall be such that the direction of the chevron directional indicator cannot be readily changed.

Exception: Existing exit signs with letters at least 5 inches (127 mm) in height are permitted to be reused.

1013.6.2 Exit sign illumination. The face of an exit sign illuminated from an external source shall have an intensity of not less than 5 footcandles (54 lux).

1013.6.3 Power source. Exit signs shall be illuminated at all times. To ensure continued illumination for a duration of not less than 90 minutes in case of primary power loss, the sign illumination means shall be connected to an emergency power system provided from storage batteries, unit equipment or an on-site generator. The installation of the emergency power system shall be in accordance with Chapter 27.

Exception: *Approved* exit sign illumination means that provide continuous illumination independent of external power sources for a duration of not less than 90 minutes, in case of primary power loss, are not required to be connected to an emergency electrical system.

1013.7 Not-an-exit warnings. Placards reading "NOT AN EXIT" shall be installed at all doorways, passageways or stairways which are not exits, exit accesses or exit discharges, and which may be mistaken for an exit. A sign indicating the use of the doorway, passageway or stairway, such as "TO BASEMENT", "STORE ROOM", "LINEN CLOSET", is permitted in lieu of the "NOT AN EXIT" sign.

* * *

SECTION 1016

EXIT ACCESS

* * *

1016.2 Egress through intervening spaces. Egress through intervening spaces shall comply with this section.

1. Exit access through an enclosed elevator lobby is permitted. Access to not less than one of the required exits shall be provided without travel through the enclosed elevator lobbies required by Section 3006. Where the path of exit access travel passes through an enclosed elevator lobby, the level of protection required for the enclosed elevator lobby is not required to be extended to the exit unless direct access to an exit is required by other sections of this code.

2. Egress from a room or space shall not pass through adjoining or intervening rooms or areas, except where such adjoining rooms or areas and the area served are accessory to one or the other, are not a Group H occupancy and provide a discernible path of egress travel to an *exit*.

Exception: *Means of egress* are not prohibited through adjoining or intervening rooms or spaces in a Group H, S or F occupancy when the adjoining or intervening rooms or spaces are the same or a lesser hazard occupancy group.

3. An exit access shall not pass through a room that can be locked to prevent egress.

4. Means of egress from dwelling units or sleeping areas shall not lead through other sleeping areas, toilet rooms or bathrooms.

5. Egress shall not pass through kitchens, storage rooms, closets or spaces used for similar purposes.

Exceptions:

1. *Means of egress* are not prohibited through a kitchen area serving adjoining rooms constituting part of the same *dwelling unit* or *sleeping unit.*

2. *Means of egress* are not prohibited through stockrooms in Group M occupancies when all of the following are met:

   2.1. The stock is of the same hazard classification as that found in the main retail area;

   2.2. Not more than 50 percent of the *exit access* is through the stockroom;

2.3. The stockroom is not subject to locking from the egress side; and

2.4. There is a demarcated, minimum 44-inch-wide (1118 mm) *aisle* defined by full- or partial-height fixed walls or similar construction that will maintain the required width and lead directly from the retail area to the *exit* without obstructions.

6. Unless approved by the building official, where two or more exits are required, exit travel shall not pass through an interior exit stairway as the only way to reach another exit.

> **Note:** See Section 1010.1.9.3 for conditions in which exit access doors from elevator lobbies are permitted to be locked.

* * *

SECTION 1017

EXIT ACCESS TRAVEL DISTANCE

1017.1 General. Travel distance within the exit access portion of the means of egress system shall be in accordance with this section.

> **Note:** Additional interior exit stairways or corridors constructed as smoke barriers may be required for standpipe hose connections. See Section 905.4.

* * *

SECTION 1019

EXIT ACCESS STAIRWAYS AND RAMPS

* * *

1019.3 Occupancies other than Groups I-2 and I-3. In other than Group I-2 and I-3 occupancies, floor openings containing exit access stairways or ramps that do not comply with one of the conditions listed in this section shall be enclosed with a shaft enclosure constructed in accordance with Section 713.

1. Exit access stairways and ramps that serve or atmospherically communicate between only two stories. Such interconnected stories shall not be open to other stories.

2. In Group R-1, R-2 or R-3 occupancies, exit access stairways and ramps connecting more than four stories ((~~or less~~)) serving and contained within an individual dwelling unit or sleeping unit or live/work unit.

3. Exit access stairways serving and contained within a Group R-3 congregate residence or a Group R-4 facility are not required to be enclosed.

4. Exit access stairways and ramps that are designed exclusively for circulation in buildings equipped throughout with an automatic sprinkler system in accordance with Section 903.3.1.1, where the area of the vertical opening between stories does not exceed twice the horizontal projected area of the stairway or ramp and the opening is protected by a draft curtain and closely spaced sprinklers in accordance with NFPA 13. In other than Group B and M occupancies, this provision is limited to openings that do not connect more than four stories.

5. Exit access stairways and ramps within an atrium complying with the provisions of Section 404.

6. Exit access stairways and ramps in open parking garages that serve only the parking garage.

7. Exit access stairways and ramps serving open-air seating complying with the exit access travel distance requirements of Section 1029.7.

8. Exit access stairways and ramps serving the balcony, gallery or press box and the main assembly floor in occupancies such as theaters, places of religious worship, auditoriums and sports facilities.

* * *

SECTION 1020

CORRIDORS

1020.1 Construction. *Corridors* shall be fire-resistance rated in accordance with Table 1020.1. The *corridor* walls required to be fire-resistance rated shall comply with Section 708 for *fire partitions*.

Exceptions:

1. A *fire-resistance rating* is not required for *corridors* in an occupancy in Group E where each room that is used for instruction has at least one door opening directly to the exterior and rooms for assembly purposes have at least one-half of the required *means of egress* doors opening directly to the exterior. Exterior doors specified in this exception are required to be at ground level.
2. A *fire-resistance rating* is not required for *corridors* contained within a dwelling or sleeping unit in an occupancy in Group R.
3. A *fire-resistance rating* is not required for *corridors* in *open parking garages*.
4. A *fire-resistance rating* is not required for *corridors* in an occupancy in Group B which is a space requiring only a single *means of egress* complying with Section 1006.2.
5. *Corridors* adjacent to the *exterior walls* of buildings shall be permitted to have unprotected openings on unrated *exterior walls* where unrated walls are permitted by Table 602 and unprotected openings are permitted by Table 705.8.
6. <u>In office areas located in buildings of Types IA or IB construction, corridor walls need not be of fire-resistance-rated construction where the corridor side of the corridor walls is finished with materials having a maximum Class B rating as defined in Chapter 8. This exception does not apply to outpatient clinics and medical offices.</u>

7. The occupant load of Group B conference rooms, lunch rooms without grease-producing cooking and other assembly rooms with an occupant load of less than 50 in each room need not be considered when determining whether corridor construction is required, provided such rooms are accessory to an office tenant located in a building of Type IA or IB construction. This provision is permitted to be used in other construction types when the floor on which the assembly room is located is equipped with an automatic sprinkler system.

TABLE 1020.1
CORRIDOR FIRE-RESISTANCE RATING

OCCUPANCY	OCCUPANT LOAD SERVED BY CORRIDOR	REQUIRED FIRE-RESISTANCE RATING (hours)	
		Without sprinkler system	With sprinkler system[c]
H-1, H-2, H-3	All	Not Permitted	1
H-4, H-5	Greater than 30	Not Permitted	1
A, B, E, F, M, S, U	Greater than 30	1	0
R	((~~Greater than 10~~)) All	Not Permitted	((~~0.5~~)) 1
I-2a, I-4	All	Not Permitted	0
I-1, I-3	All	Not Permitted	1[b]

a. For requirements for occupancies in Group I-2, see Sections 407.2 and 407.3.

b. For a reduction in the *fire-resistance rating* for occupancies in Group I-3, see Section 408.8.

c. Buildings equipped throughout with an *automatic sprinkler system* in accordance with Section 903.3.1.1 or 903.3.1.2 where allowed.

* * *

1020.4 Dead ends. Where more than one *exit* or *exit access doorway* is required, the *exit access* shall be arranged such that there are no dead ends in *corridors* more than ((~~20 feet (6096 mm)~~)) 25 feet (7620 mm) in length.

Exceptions:

1. In occupancies in Group I-3 of Occupancy Condition 2, 3 or 4, the dead end in a *corridor* shall not exceed 50 feet (15 240 mm).

2. In occupancies in Groups B, E, F, I-1, M, R-1, R-2, ((~~R-4,~~)) S and U, where the building is equipped throughout with an *automatic sprinkler system* in accordance with Section 903.3.1.1, the length of the dead-end *corridors* shall not exceed 50 feet (15 240 mm).

3. A dead-end *corridor* shall not be limited in length where the length of the dead-end *corridor* is less than 2.5 times the least width of the dead-end *corridor*.

4. Dead ends are permitted to be 75 feet (22 860 mm) in length in areas containing Group B offices in buildings of Types IA and IB construction, where the cumulative occupant load does not exceed 50 for all areas for which the dead end serves as the only means of egress.

1020.5 Air movement in corridors. *Corridors* shall not serve as supply, return, exhaust, relief or ventilation air ducts or plenums except as allowed by Mechanical Code Section 601.2.

((~~**Exceptions:**~~

~~1. Use of a *corridor* as a source of makeup air for exhaust systems in rooms that open directly onto such *corridors*, including toilet rooms, bathrooms, dressing rooms, smoking lounges and janitor closets, shall be permitted, provided that each such *corridor* is directly supplied with outdoor air at a rate greater than the rate of makeup air taken from the *corridor*.~~

~~2. Where located within a dwelling unit, the use of *corridors* for conveying return air shall not be prohibited.~~

~~3. Where located within tenant spaces of 1,000 square feet (93 m²) or less in area, utilization of *corridors* for conveying return air is permitted.~~

~~4. Incidental air movement from pressurized rooms within health care facilities, provided that the *corridor* is not the primary source of supply or return to the room.~~))

1020.5.1 Corridor ceiling. Use of the space between the *corridor* ceiling and the floor or roof structure above as a return air plenum is permitted for one or more of the following conditions:

1. The *corridor* is not required to be of fire-resistance rated construction;
2. The *corridor* is separated from the plenum by fire-resistance-rated construction;
3. The air-handling system serving the *corridor* is shut down upon activation of the air-handling unit *smoke detectors* required by the *International Mechanical Code*;
4. The air-handling system serving the *corridor* is shut down upon detection of sprinkler waterflow where the building is equipped throughout with an *automatic sprinkler system*; or
5. The space between the *corridor* ceiling and the floor or roof structure above the *corridor* is used as a component of an *approved* engineered smoke control system.

[W] 1020.6 Corridor continuity. Fire-resistance-rated *corridors* shall be continuous from the point of entry to an *exit*, and shall not be interrupted by intervening rooms. Where the path of egress travel within a fire-resistance-rated *corridor* to the *exit* includes travel along unenclosed *exit access stairways* or *ramps*, the *fire resistance-rating* shall be continuous for the length of the *stairway* or *ramp* and for the length of the connecting *corridor* on the adjacent floor leading to the *exit*.

Exceptions:

1. Foyers, lobbies or reception rooms constructed as required for *corridors* shall not be construed as intervening rooms.
2. Enclosed elevator lobbies are permitted by Item 1 of Section 1016.2 shall not be constructed as intervening rooms.
3. In Group R-2 boarding homes and residential treatment facilities licensed by Washington state, seating areas shall be allowed to be open to the corridor provided:
   3.1 The seating area is constructed as required for the corridor;
   3.2 The floor is separated into at least two compartments complying with Section 407.5;

3.3 Each individual seating area does not exceed 150 square feet (13.9 m^2), excluding the corridor width;

3.4 The combined total space of seating areas per compartment does not exceed 300 square feet, excluding the corridor width;

3.5 Combustible furnishings located within the seating area shall be in accordance with *International Fire Code* Section 805; and

3.6 Emergency means of egress lighting is provided as required by Section 1008 to illuminate the area.

* * *

SECTION 1021

EGRESS BALCONIES

* * *

1021.2 Wall separation. Exterior egress balconies shall be separated from the interior of the building by walls and opening protectives as required for *corridors*.

Exceptions:

1. Separation is not required where the exterior egress balcony is served by at least two *stairs* and a dead end travel condition does not require travel past an unprotected opening to reach a *stair*.

2. Separation is not required in buildings equipped throughout with an automatic sprinkler system in accordance with Section 903.3.1.1 or 903.3.1.2.

* * *

SECTION 1023

INTERIOR EXIT STAIRWAYS AND RAMPS

1023.1 General. *Interior exit stairways* and *interior exit ramps* serving as an *exit* component in a *means of egress* system shall comply with the requirements of this section. *Interior exit stairways* and *ramps* shall be enclosed and lead directly to the exterior of the building or shall be extended to the exterior of the building with an *exit passageway* conforming to the requirements of Section 1024, except as permitted in Section 1028.1. An *interior exit stairway* or *ramp* shall not be used for any purpose other than as a *means of egress* and a circulation path.

1023.2 Construction. Enclosures for *interior exit stairways* and ramps shall be constructed as *fire barriers* in accordance with Section 707 or *horizontal assemblies* constructed in accordance with Section 711, or both. *Interior exit stairway* and *ramp* enclosures shall have a *fire-resistance rating* of not less than 2 hours where connecting more than four stories ((~~or more~~)) and not less than 1 hour where connecting ((~~less than~~)) four stories or less. The number of stories connected by the *interior exit stairways* or *ramps* shall include any basements, but not any *mezzanines*. *Interior exit stairways* and *ramps* shall have a *fire-resistance rating* not less than the floor assembly penetrated, but need not exceed 2 hours.

Exceptions:

1. *Interior exit stairways* and *ramps* in Group I-3 occupancies in accordance with the provisions of Section 408.3.8.
2. *Interior exit stairways* within an *atrium* enclosed in accordance with Section 404.6

1023.3 Termination. *Interior exit stairways* and *ramps* shall terminate at an *exit discharge* or a *public way*.

Exception: A combination of *interior exit stairways, interior exit ramps* and *exit passageways*, constructed in accordance with Sections 1023.2, 1023.3.1 and 1024, respectively, and forming a continuous protected enclosure, shall be permitted to extend an interior exit stairway or ramp to the exit discharge or a public way.

1023.3.1 Extension. Where *interior exit stairways* and *ramps* are extended to an *exit discharge* or a *public way* by an *exit passageway*, the *interior exit stairway* and *ramp* shall be separated from the *exit passageway* by a *fire barrier* constructed in accordance with Section 707 or a *horizontal assembly* constructed in accordance with Section 711, or both. The *fire-resistance rating* shall be at least equal to that required for the *interior exit stairway* and *ramp*. A *fire door* assembly complying with Section 716.5 shall be installed in the *fire barrier* to provide a *means of egress* from the *interior exit stairway* and *ramp* to the *exit passageway*. Openings in the *fire barrier* other than the *fire door* assembly are prohibited. Penetrations of the *fire barrier* are prohibited.

Exceptions:

1. Penetrations of the *fire barrier* in accordance with Section 1023.5 shall be permitted.
2. Separation between an interior exit stairway or ramp and the exit passageway extension shall not be required where there are no openings into the exit passageway extension.
3. A fire barrier and fire door assembly are not required to separate an exit passageway from a pressurized stairway.

1023.4 Openings. *Interior exit stairway* and *ramp* opening protectives shall be in accordance with the requirements of Section 716.

Openings in *interior exit stairways* and *ramps* other than unprotected exterior openings shall be limited to those necessary for *exit access* to the enclosure from normally occupied spaces and for egress from the enclosure.

Elevators shall not open into *interior exit stairways* and *ramps*.

Interpretation I1023.5: Accessory rooms such as restrooms, storage closets, laundry rooms, electrical, communication closets and similar spaces shall not open into an interior exit stairway.

1023.5 Penetrations. Penetrations into and openings through *interior exit stairways* and *ramps* are prohibited except for the following:

1. equipment and ductwork necessary for independent ventilation or pressurization,
2. sprinkler piping,
3. standpipes,
4. electrical raceway for fire department communication systems and sprinkler monitoring terminating at a steel box not exceeding 16 square inches (0.010 m^2),
5. electrical raceway serving the *interior exit stairway* and *ramp* and terminating at a steel box not exceeding 16 square inches (0.010 m^2).
6. piping used exclusively for the drainage of rainfall runoff from roof areas, provided the roof is not used for a helistop or heliport.
7. unfired unit heaters required for freeze protection of fire protection equipment are permitted to penetrate one membrane; the conduit serving the heater is permitted to penetrate both membranes.
8. equipment necessary for electrically-controlled stairway door locks and security cameras are permitted to penetrate one membrane; the conduit serving the equipment is permitted to penetrate both membranes.

There shall be no penetrations or communicating openings, whether protected or not, between adjacent *interior exit stairways* and *ramps*.

Interpretation I1023.5: Ducts passing through interior exit stairways shall be separated from the stairway by construction having a fire-resistance rating at least equal to the stairway walls. At least one side of the duct enclosure shall abut the interior exit stairway enclosure.

Exception: Membrane penetrations shall be permitted on the outside of the *interior exit stairway* and *ramp*. Such penetrations shall be protected in accordance with Section 714.3.2.

* * *

1023.9 Stairway identification signs. A sign shall be provided at each floor landing in an *interior exit stairway* and *ramp* connecting more than three stories designating the floor level, the terminus of the top and bottom of the *interior exit stairway* and *ramp* and the identification of the *stair* or *ramp*. The signage shall also state the story of, and the direction to, the *exit discharge* and ((~~the availability of~~)) whether there is roof access from the *interior exit stairway* and *ramp* for the fire department, and whether the roof access is accessed by roof hatch. The sign shall be located 5 feet (1524 mm) above the floor landing in a position that is readily visible when the doors are in the open and closed positions. In addition to the *stairway* identification sign, a floor-level sign in raised characters and Braille complying with ICC A117.1 shall be located at each floor-level landing adjacent to the door leading from the *interior exit stairway* and *ramp* into the *corridor* to identify the floor level.

* * *

1023.11 ((~~Smokeproof enclosures and p~~))Pressurized stairways. Where required by Section 403.5.4 or 405.7.2, *interior exit stairways* and *ramps* shall be ((~~smokeproof enclosures~~)) pressurized in accordance with Section 909.20.5 of the Seattle Building Code.

1023.11.1 Termination and extension. A ((~~*smokeproof enclosure*~~)) pressurized *stairway* shall terminate at an *exit discharge* or a *public way*. The ((~~*smokeproof enclosure*~~)) pressurized *stairway* shall be permitted to be extended by an *exit passageway* in accordance with Section 1023.3. ((~~The *exit passageway* shall be without openings other than the *fire door* assembly required by Section 1022.3.1 and those necessary for egress from the *exit passageway*.~~)) The *exit passageway* shall be separated from the remainder of the building by 2-hour *fire barriers* constructed in accordance with Section 707 or *horizontal assemblies* constructed in accordance with Section 711, or both. The exit passageway shall be protected and pressurized in the same manner as the pressurized stairway.

Exception((s)):

((~~1. Openings in the *exit passageway* serving a *smokeproof enclosure* are permitted where the *exit passageway* is protected and pressurized in the same manner as the *smokeproof enclosure*, and openings are protected as required for access from other floors.~~

~~2. The *fire barrier* separating the smokeproof enclosure from the *exit passageway* is not required, provided the *exit passageway* is protected and pressurized in the same manner as the *smokeproof enclosure*.~~))

((~~3. A *smokeproof enclosure* or~~)) A pressurized *stairway* shall be permitted to egress through areas on the *level of exit discharge* or vestibules as permitted by Section 1028.

((~~**1023.11.2 Enclosure access.** Access to the *stairway* within a *smokeproof enclosure* shall be by way of a vestibule or an open exterior balcony.~~

~~**Exception:** Access is not required by way of a vestibule or exterior balcony for *stairways* using the pressurization alternative complying with Section 909.20.5.~~))

1023.12 Equipment in interior exit stairways. Equipment is prohibited in interior exit stairways except for equipment necessary for independent pressurization, lighting of the interior exit stairway, sprinkler piping, standpipes, electrical equipment for fire department communication and sprinkler monitoring, and unit heaters required to protect fire protection equipment from freezing.

* * *

SECTION 1024

EXIT PASSAGEWAYS

* * *

1024.5 Openings and penetrations. *Exit passageway* opening protectives shall be in accordance with the requirements of Section 716.

((~~Except as permitted in Section 402.8.7, openings in *exit passageways* other than exterior openings shall be limited to those necessary for exit access to the *exit passageway* from normally occupied spaces and for egress from the *exit passageway*.~~))

The following openings are permitted in exit passageways:

1. Doors from rooms and spaces in accordance with 402.8.7;
2. Unprotected exterior openings;
3. Doors necessary for exit access from normally occupied spaces;
4. Doors necessary for egress from the exit passageways;
5. Doors from vestibules constructed in accordance with Section 1020.1 serving only spaces that are normally occupied.
6. Doors from interior exit stairways.

Where an *interior exit stairway* or *ramp* is extended to an *exit discharge* or a *public way* by an *exit passageway*, the *exit passageway* shall also comply with Section 1023.3.1. Elevators shall not open into an *exit passageway*.

Interpretation I1024.5: Accessory rooms such as restrooms, storage closets, laundry rooms, electrical, communication closets and similar spaces shall not open into exit passageways.

Code Alternate CA1024.5: An elevator is permitted to open into an exit passageway when the following conditions are met:

1. A lobby shall separate the elevator from the exit passageway. This is allowed at only one location in the building. The lobby is required whether the elevator hoistway is pressurized or not.
2. The separation shall be constructed as a fire barrier having a fire-resistive rating and opening protectives as for the exit passageway. The door between the lobby and the exit passageway shall also comply with Section 716.5.3. The door shall have listed gaskets installed at head, jambs and meeting edges. This only applies to the walls common with the exit passageway.
3. The lobby shall have a minimum depth of 36 inches. (Note that areas of refuge may require a larger dimension).
4. An elevator lobby constructed as a smoke partition shall be provided at every floor below the level of the exit passageway served by the elevator. Hoistway pressurization is permitted to be used in lieu of the lobbies on floors below the level of the exit passageway.
5. A door as required by Section 1023.3.1 between an interior exit stairway and the exit passageway shall be provided.

6. An automatic sprinkler system in accordance with Section 903.3.1.1 shall be provided throughout the floor on which the exit passageway is located.

This alternate does not apply to interior exit stairways.

1024.6 Penetrations. Penetrations into and openings through an *exit passageway* are prohibited except for required *exit* doors, equipment and ductwork necessary for independent pressurization, sprinkler piping, standpipes, electrical raceway for fire department communication and electrical raceway serving the *exit passageway* and terminating at a steel box not exceeding 16 square inches ($0.010m^2$). Such penetrations shall be protected in accordance with Section 714. There shall be no penetrations or communicating openings, whether protected or not, between adjacent *exit passageways*.

Exceptions:

1. Membrane penetrations shall be permitted on the outside of the *exit passageway*. Such penetrations shall be protected in accordance with Section 714.3.2.
2. Unfired unit heaters allowed by Section 1023.12 to be installed in interior exit stairways are permitted to penetrate one membrane. The conduit serving the heater is permitted to penetrate both membranes.

* * *

SECTION 1025

LUMINOUS EGRESS PATH MARKINGS

* * *

1025.2.6 Doors within the exit path. Doors through which occupants must pass in order to complete the exit path shall be provided with markings complying with Sections 1025.2.6.1 through 1025.2.6.3.

Exception: Main exterior *exit* doors or gates that are obviously and clearly identifiable as *exits* need not be provided with markings where *approved* by the *building official.*

* * *

SECTION 1027

EXTERIOR EXIT STAIRWAYS AND RAMPS

* * *

1027.3 Open side. *Exterior exit stairways* and *ramps* serving as an element of a required *means of egress* shall be at least 50 percent open on at least one side ((~~, except for required structural columns, beams, *handrails* and *guards*~~)). An open side shall have not less than ((~~35 square feet (3.3 m²)~~))) 28 square feet (2.6 m^2) of aggregate open area adjacent to each floor level. ((~~and the level of each intermediate landing. The required open area shall be located not less than 42 inches (1067 mm) above the adjacent floor or landing level.~~)) The open area shall be distributed to prevent accumulation of smoke or toxic gases.

* * *

1027.6 Exterior stairway and ramp protection. *Exterior exit stairways* and *ramps* shall be separated from the interior of the building as required in Section 1023.2. Openings shall be limited to those necessary for egress from normally occupied spaces. Where a vertical plane projecting from the edge of an exterior exit stairway or ramp and landings is exposed by other parts of the building at an angle of less than 180 degrees (3.14 rad), the exterior wall shall be rated in accordance with Section 1023.7

Exceptions:

1. Separation from the interior of the building is not required for occupancies, other than those in Group R-1 or R-2, in buildings that are no more than two stories above *grade plane* where a *level of exit discharge* serving such occupancies is the first story above *grade plane*.

2. Separation from the interior of the building is not required where the *exterior stairway* or *ramp* is served by an exterior *ramp* or balcony that connects two remote *exterior stairways* or other *approved exits* with a perimeter that is not less than 50 percent open. To be considered open, the opening shall be a minimum of 50 percent of the height of the enclosing wall, with the top of the openings no less than 7 feet (2134 mm) above the top of the balcony.

3. Separation from the *open-ended corridor* of the building is not required for *exterior exit stairways* or *ramps*, provided that Items 3.1 through 3.5 are met:

3.1. The building, including *open-ended corridors*, and *stairways* and *ramps*, shall be equipped throughout with an *automatic sprinkler system* in accordance with Section 903.3.1.1 or 903.3.1.2.

3.2. The *open-ended corridors* comply with Section 1020.

3.3. The *open-ended corridors* are connected on each end to an *exterior exit stairway* or *ramp* complying with Section 1027.

3.4. The *exterior walls* and openings adjacent to the *exterior exit stairway* or *ramp* comply with Section 1023.7 <u>and 1027.7</u>.

3.5. At any location in an *open-ended corridor* where a change of direction exceeding 45 degrees (0.79 rad) occurs, a clear opening of not less than 35 square feet (3.3 m2) or an exterior *stairway* or *ramp* shall be provided. Where clear openings are provided, they shall be located so as to minimize the accumulation of smoke or toxic gases.

1027.7 Exterior exit stairway and ramp exterior walls. Where nonrated walls or unprotected openings enclose the exterior of the *stairway* and the walls or openings are exposed by other parts of the building at an angle of less than 180 degrees (3.14 rad), the building *exterior walls* within 10 feet (3048 mm) horizontally of a nonrated wall or unprotected opening shall have a *fire-resistance rating* of not less than 1 hour. Openings within such *exterior walls* shall be protected by opening protectives having a *fire protection rating* of not less than 3/4 hour. This construction shall extend vertically from the ground to a point 10 feet (3048 mm) above the topmost landing of the *stairway* or to the roof line, whichever is lower.

* * *

SECTION 1028

EXIT DISCHARGE

1027.1 General. *Exits* shall discharge directly to the exterior of the building. The *exit discharge* shall be at grade or shall provide a direct path of egress travel to grade. The *exit discharge* shall not reenter a building except into an exit or as otherwise approved by the building official. The combined use of Exceptions 1 and 2 shall not exceed 50 percent of the number and capacity of the required exits.

Exceptions:

1. Not more than 50 percent of the number and minimum width or required capacity of *interior exit stairways* and *ramps* is permitted to egress through areas on the *level of exit discharge* provided all of the following are met:
   1.1. Discharge of *interior exit stairways* and *ramps* shall be provided with a free and unobstructed path of travel to an exterior exit door and such *exit* is readily visible and identifiable from the point of termination of the enclosure.

1.2. The entire area of the *level of exit discharge* is separated from areas below by construction conforming to the *fire-resistance rating* for the enclosure.

1.3. The egress path from the *interior exit stairway* and *ramp* on the *level of exit discharge* is protected throughout by an *approved automatic sprinkler system*. All portions of the *level of exit discharge* with access to the egress path shall either be protected throughout with an *automatic sprinkler system* installed in accordance with Section 903.3.1.1 or 903.3.1.2, or separated from the egress path in accordance with the requirements for the enclosure of *interior exit stairways* or *ramps*.

1.4 Where a required *interior exit stairway* or *ramp* and an *exit access stairway* or *ramp* serve the same floor level and terminate at the same *level of exit discharge*, the termination of the *exit access stairway* or *ramp* and the exit discharge door of the *interior exit stairway* or *ramp* shall be separated by a distance of not less than 30 feet (9144 mm) or not less than one-fourth the length of the maximum overall diagonal dimension of the building, whichever is less. The distance shall be measured in a straight line between the exit discharge door from the *interior exit stairway* or ramp and the last tread of the *exit access stairway* or termination of slope of the *exit access ramp*.

2. Not more than 50 percent of the number and capacity of the *interior exit stairways* and *ramps* is permitted to egress through a vestibule provided all of the following are met:

2.1. The entire area of the vestibule is separated from areas below by construction conforming to the *fire-resistance rating* of the *interior exit stairway* or *ramp* enclosure.

2.2. The depth from the exterior of the building is not greater than 10 feet (3048 mm) and the ((~~length~~)) width is not greater than 30 feet (9144 mm).

2.3. The area is separated from the remainder of the *level of exit discharge* by a fire partition constructed in accordance with Section 708 of the International Building Code.

Exception: The maximum transmitted temperature rise is not required.

2.4. The area is used only for *means of egress* and *exits* directly to the outside.

3. *Horizontal exits* complying with Section 1026 shall not be required to discharge directly to the exterior of the building.

Interpretation I1028.1: Exception 2 applies only to vestibules with direct access from the interior exit stairway or ramp.

* * *

1028.4 Egress courts. *Egress courts* serving as a portion of the *exit discharge* in the *means of egress* system shall comply with the requirements of Sections 1028.4.1 and 1028.4.2.

1028.4.1 Width. The required capacity of *egress courts* shall be determined as specified in Section 1005.1, but such width shall not be less than 44 inches (1118 mm), except as specified herein. *Egress courts* serving Group R-3 and U occupancies shall not be less than 36 inches (914 mm) in width. The required width of *egress courts* shall be unobstructed to a height of 7 feet (2134 mm).

Exception: Encroachments complying with Section 1005.7.

((~~Where an *egress court* exceeds the minimum required width and the width of such *egress court* is then reduced along the path of exit travel, the reduction in width shall be gradual. The transition in width shall be affected by a *guard* not less than 36 inches (914 mm) in height and shall not create an angle of more than 30 degrees (0.52 rad) with respect to the axis of the *egress court* along the path of egress travel. In no case shall the width of the *egress court* be less than the required minimum.~~))

1028.4.2 Construction and openings. Where an *egress court* serving a building or portion thereof is less than 10 feet (3048 mm) in width, the *egress court* walls shall have not less than 1-hour fire-resistance-rated construction for a distance of 10 feet (3048 mm) above the floor of the *court*. Openings within such walls shall be protected by opening protectives having a fire protection rating of not less than 3/4 hour.

Exceptions:

1. *Egress courts* serving an *occupant load* of less than 10.
2. *Egress courts* serving Group R-3.
3. In buildings other than those which have a single means of egress under Section 1006.3.2 item 7, opening protection need not be provided where it is possible to exit in two directions from the court.

* * *

SECTION 1030

EMERGENCY ESCAPE AND RESCUE

[BE] 1030.1 General. In addition to the *means of egress* required by this chapter, provisions shall be made for *emergency escape and rescue openings* in Group R-2 occupancies in accordance with Tables 1006.3.2(1) and 1006.3.2(2) and Group R-3 occupancies. Basements and sleeping rooms below the fourth story above *grade plane* shall have at least one exterior *emergency escape and rescue opening* in accordance with this section. Where basements contain one or more sleeping rooms, *emergency escape and rescue openings* shall be required in each sleeping room, but shall not be required in adjoining areas of the basement. Such openings shall open directly into a *public way* or to a *yard* or *court* that opens to a *public way*.

Exceptions:

1. Basements with a ceiling height of less than 80 inches (2032 mm) shall not be required to have *emergency escape and rescue openings*.

2. *Emergency escape and rescue openings* are not required from basements or sleeping rooms that have an *exit* door or *exit access* door that opens directly into a *public way* or to a *yard*, *court* or exterior exit balcony that opens to a *public way*.

3. Basements without *habitable spaces* and having not more than 200 square feet (18.6 m2) in floor area shall not be required to have *emergency escape and rescue openings*; and

4. Buildings designed with a single exit according to Section 1006.3.2, Item 7.

* * *

Section 12. Chapter 11 of the 2015 International Fire Code is amended as follows:

CHAPTER 11

((~~CONSTRUCTION~~)) REQUIREMENTS FOR EXISTING BUILDINGS

SECTION 1101

GENERAL

1101.1 Scope. The provisions of this chapter ((~~shall~~)) apply to existing buildings constructed prior to the adoption of this code.

1101.2 Intent. The intent of this chapter is to provide a minimum degree of fire and life safety to persons occupying existing buildings by providing minimum ((~~construction~~)) requirements where such existing buildings do not comply with the minimum requirements of the *International Building Code*.

1101.3 Permits. Permits ((~~shall be~~)) are required as set forth in Sections 105.6 and 105.7 and the *International Building Code*.

* * *

SECTION 1103

FIRE SAFETY REQUIREMENTS

FOR EXISTING BUILDINGS

* * *

1103.2 Emergency responder ((~~radio coverage~~)) communication systems in existing high rise buildings. ((~~Existing buildings that do not have *approved* radio coverage for emergency responders within the building based upon the existing coverage levels of the public safety communication systems of the jurisdiction at the exterior of the building shall be equipped with such coverage according to one of the following~~)) Buildings constructed prior to the implementation of this code shall not be required to comply with the emergency responder radio coverage systems provisions of Section 510.

Exceptions:

1. Where an existing required wired communication system cannot be repaired or ((~~is being~~)) replaced. ((~~, or where not *approved* in accordance with Section 510.1, Exception 1.~~))

2. High rise buildings that are not provided with an existing wired communications system.

Exception: A wired communication system in accordance with Section 907.2.13.2 shall be permitted to be installed in lieu of an approved radio coverage system.

3. Buildings undergoing substantial alteration as determined by the Department of Planning and Development.

((~~2. Within a time frame established by the adopting authority.~~

~~**Exception:** Where it is determined by the *fire code official* that the radio coverage system is not needed.~~))

* * *

1103.5 Sprinkler systems. An *automatic sprinkler system* shall be provided in existing buildings in accordance with Sections 1103.5.1 and 1103.5.((~~2~~))3.

1103.5.1 Group A-2. An *automatic sprinkler system* shall be installed in accordance with Section 903.3.1.1 throughout existing buildings or portions thereof used as Group A-2 occupancies with an occupant load of 300 or more.

1103.5.2 Group I-2. An *automatic sprinkler system* shall be provided throughout existing Group I-2 fire areas. The sprinkler system shall be provided throughout the floor where the Group I-2 occupancy is located, and in all floors between the Group I-2 occupancy and the *level of exit discharge*.

1103.5.3 Group I-2 Condition 2. In addition to the requirements of Section 1103.5.2, existing buildings of Group I-2 Condition 2 occupancy shall be equipped throughout with an *approved automatic sprinkler system* in accordance with Section 903.3.1.1. The *automatic sprinkler system* shall be installed as established by the adopting ordinance.

1103.5.4 Pyroxylin plastics. An *automatic sprinkler system* shall be provided throughout existing buildings where cellulose nitrate film or pyroxylin plastics are manufactured, stored or handled in quantities exceeding 100 pounds (45 kg). Vaults located within buildings for the storage of raw pyroxylin shall be protected with an *approved automatic sprinkler system* capable of discharging 1.66 gallons per minute per square foot (68 L/min/m^2) over the area of the vault.

[W] 1103.5.5 Nightclub. An *automatic sprinkler system* shall be provided throughout A-2 *nightclubs* as defined in this code. No building shall be constructed for, used for, or converted to occupancy as a *nightclub* except in accordance with this section.

* * *

1103.6.3 Signs for high-rise buildings. An additional sign with letters at least 1 inch in size shall be provided at the fire department connections of high-rise buildings that indicate the building fire pump static (churn) discharge pressure. Where the pump is more than two stories above or below the fire department connections, the pump static/churn discharge pressure on the signage shall be adjusted to correct for the elevation difference.

1103.7 Fire alarm systems. An *approved* fire alarm system shall be installed in existing buildings and structures in accordance with Sections 1103.7.1 through 1103.7.6((~~7~~)) and provide occupant notification in accordance with Section 907.6 unless other requirements are provided by other sections of this code.

Exception: Non-residential ((~~O~~)) occupancies with an existing, previously *approved* fire alarm system, and residential occupancies with a fire alarm system capable of achieving a minimum sound level in the sleeping rooms of 60 dBa or 15 dBa above ambient noise level, whichever is higher.

* * *

[W] 1103.9 Carbon monoxide alarms. Existing Group I ((~~-1, I-2, I-4~~)) or R occupancies shall be equipped with single station carbon monoxide alarms in accordance with Section 915.4.3. ((~~, except that the carbon monoxide alarms shall be allowed to be solely operated.~~)) An inspection will occur when alterations, repairs or additions requiring a permit occur, or when one or more sleeping rooms are added or created. The carbon monoxide alarms shall be *listed* as complying with UL 2034, and be installed and maintained in accordance with NFPA 720-2015 and the manufacturer's instructions.

Exceptions.

1. For other than R-2 occupancies, if the building does not contain a fuel-burning appliance, a fuel-burning fireplace, or an attached garage.

2. Work involving the exterior surfaces of dwellings, such as the replacement of roofing or siding, or the addition or replacement of windows or doors, or the addition of a porch or deck, or electrical permits.

3. Installation, alteration or repairs of noncombustible plumbing or mechanical systems.

4. *Sleeping units* or *dwelling units* in I and R-1 occupancies and R-2 college dormitories, hotel, DOC prisons and work releases and assisted living facilities and residential treatment facilities licensed by the state of Washington which do not themselves contain a fuel-burning appliance, a fuel-burning fireplace, or an attached garage, need not be provided with carbon monoxide alarms provided that:

4.1 The *sleeping units* or *dwelling unit* is not adjacent to any room which contains a fuel-burning appliance, a fuel-burning fireplace, or an attached garage; and

4.2 The *sleeping units* or *dwelling unit* is not connected by duct work or ventilation shafts with a supply or return register in the same room to any room containing a fuel-burning appliance, a fuel-burning fireplace, or to an attached garage; and

4.3 The building is provided with a common area carbon monoxide detection system.

5. An open parking garage, as defined in the *International Building Code*, or enclosed parking garage ventilated in accordance with Section 404 of the *International Mechanical Code* is not considered an attached garage.

* * *

SECTION 1104

MEANS OF EGRESS FOR EXISTING BUILDINGS

[W]1104.1 General. *Means of egress* in existing buildings shall comply with Section 1030 and Sections 1104.2 through 1104.24. ((~~the minimum egress requirements when specified in Table 1103.1 as further enumerated in Sections 1104.2 through 1104.23, and the building code that applied at the time of construction. Where the provisions of this chapter conflict with the building code that applied at the time of construction, the most restrictive provision shall apply. Existing buildings that were not required to comply with a building code at the time of construction shall comply with the minimum *egress* requirements when specified in Table 1103.1 as further enumerated in Sections 1104.2 through 1104.24.~~))

Exception: *Means of egress* conforming to the requirements of the building code under which they were constructed and Section 1030 shall not be required to comply with 1104.2 through 1104.22 and 1104.24.

* * *

1104.5 Illumination emergency power. The power supply for *means of egress* illumination shall normally be provided by the premises' electrical supply. In the event of power supply failure, illumination shall be automatically provided from an emergency system for the following occupancies where such occupancies require two or more *means of egress*:

1. Group A having 50 or more occupants.

Exception: Assembly occupancies used exclusively as a place of worship and having an *occupant load* of less than 300.

2. Group B buildings three or more stories in height, buildings with 100 or more occupants above or below a *level of exit discharge* serving the occupants or buildings with 1,000 or more total occupants.

3. Group E in interior *stairs*, *corridors*, windowless areas with student occupancy, shops and laboratories.

4. Group F having more than 100 occupants.

Exception: Buildings used only during daylight hours which are provided with windows for natural light in accordance with the *International Building Code*.

5. Group I.

6. Group M.

Exception: Buildings less than 3,000 square feet (279 m2) in gross sales area on one story only, excluding mezzanines.

7. Group R-1.

Exception: Where each *sleeping unit* has direct access to the outside of the building at grade.

8. Group R-2.

Exception: Where each *dwelling unit* or *sleeping unit* has direct access to the outside of the building at grade.

~~9.~~ **[W]** ((~~Group R-4.~~

~~**Exception:** Where each *sleeping unit* has direct access to the outside of the building at ground level.~~))

* * *

Section 13. Chapter 20 of the 2015 International Fire Code is amended as follows:

CHAPTER 20

AVIATION FACILITIES

* * *

SECTION 2007

HELISTOPS AND HELIPORTS

2007.1 General. Helistops and heliports shall be maintained in accordance with Sections 2007.2 through 2007.8. Helistops and heliports on buildings shall comply with NFPA 418 and be constructed in accordance with the International Building Code.

2007.2 Clearances. The landing area for helicopters less than 3,500 pounds (1588 kg) shall be not less than 20 feet (6096 mm) in length and width. The ((~~touchdown~~)) landing area shall be surrounded on all sides by a clear area having minimum average width at roof level of 15 feet (4572 mm) but no width less than 5 feet (1524 mm). The clear area shall be maintained.

2007.3 Flammable and Class II combustible liquid spillage. Landing areas on structures shall be maintained so as to confine flammable or Class II combustible liquid spillage to the landing area itself, and provisions shall be made to drain such spillage away from exits or stairways serving the helicopter landing area or from a structure housing such exit or stairway.

2007.4 Exits. Exits and stairways shall be maintained in accordance with Section 412.7 of the International Building Code.

2007.5 Standpipe systems. A building, equipped with a standpipe system, ((~~with~~)) that has a rooftop helistop or heliport shall be provided with a Class I or III stand pipe system extended to the roof level on which the helistop or heliport is located. All portions of the helistop and heliport

area shall be within 150 feet (45 720 mm) of a 2 ½ -inch (63.5 mm) outlet on the standpipe system.

2007.6 Foam protection. Foam fire-protection capabilities shall be provided for rooftop heliports. Such systems shall be designed, installed and maintained in accordance with the applicable provisions of Sections 903, 904 and 905.

2007.7 Fire extinguishers. A minimum of one portable fire extinguisher having a minimum 80-B:C rating shall be provided for each permanent takeoff and landing area and for the aircraft parking areas. Installation, inspection and maintenance of these extinguishers shall be in accordance with Section 906.

2007.8 Federal approval. Before operating helicopters from helistops and heliports, approval shall be obtained from the Federal Aviation Administration.

2007.9 Restrictions in Fire District. Heliports shall not be located in the Fire District.

* * *

Section 14. Chapter 22 of the 2015 International Fire Code is amended as follows:

CHAPTER 22

COMBUSTIBLE DUST PRODUCING OPERATIONS

SECTION 2201

SCOPE

2201.1 Scope. The equipment, processes and operations involving dust explosion hazards shall comply with the provisions of this chapter.

Exception: Equipment or machinery located inside buildings that emit dust but are used on an intermittent basis, including, but not limited to, model shops, research and development facilities, hobby, and other non-production uses, shall be provided with a local, point of use dust

collection system. The dust collector can be a portable type with high efficiency filters to allow exhaust air to be discharged back into the space. Such collectors are not required to be provided with an approved explosion-control system. Such systems shall be limited to no more than 1,500 cfm.

* * *

Section 15. Chapter 23 of the 2015 International Fire Code is amended as follows:

CHAPTER 23

MOTOR FUEL-DISPENSING FACILITIES AND REPAIR GARAGES

SECTION 2301

GENERAL

2301.1 Scope. Automotive motor fuel-dispensing facilities, marine motor fuel-dispensing facilities, fleet vehicle motor fuel-dispensing facilities, aircraft motor-vehicle fuel-dispensing facilities and repair garages shall be in accordance with this chapter and the *International Building Code, International Fuel Gas Code* and *International Mechanical Code*. Such operations shall include both those that are accessible to the public and private operations.

2301.1. Point of Information

For provisions relating to the transfer of flammable and combustible liquids directly from tank vehicles into the fuel tanks of motor vehicles located at commercial, industrial, governmental or manufacturing establishments, see Section 5706.5.4.5.

* * *

SECTION 2302

DEFINITIONS

2302.1 Definitions. The following terms are defined in Chapter 2:

AIRCRAFT MOTOR-VEHICLE FUEL-((~~DISPENING~~)) DISPENSING FACILITY.

ALCOHOL-BLENDED FUELS.

AUTOMOTIVE MOTOR FUEL-DISPENSING FACILITY.

DISPENSING DEVICE, OVERHEAD TYPE.

FLEET VEHICLE MOTOR FUEL-DISPENSING FACILITY.

FIRE DISTRICT.

LIQUEFIED NATURAL GAS (LNG).

MARINE MOTOR FUEL-DISPENSING FACILITY.

REPAIR GARAGE.

SELF-SERVICE MOTOR FUEL-DISPENSING FACILITY.

* * *

SECTION 2303

LOCATION OF DISPENSING DEVICES

* * *

2303.2 Emergency disconnect switches. An *approved,* clearly identified and readily accessible emergency disconnect switch shall be provided at an *approved* location to stop the transfer of fuel to the fuel dispensers in the event of a fuel spill or other emergency. An emergency disconnect switch for exterior fuel dispensers shall be located within 100 feet (30 480 mm) of, but not less than 20 feet (6096 mm) from, the fuel dispensers. For interior fuel-dispensing operations, the emergency disconnect switch shall be installed at an *approved* location. Such devices shall be distinctly *labeled* as: EMERGENCY FUEL SHUTOFF. Signs shall be provided in *approved* locations, and letters shall not be less than 3 inches (76.2 mm) in height and ½ inch (12.7) in stroke.

* * *

SECTION 2304

DISPENSING OPERATIONS

* * *

2304.4.1 Approved containers required. Class I, II and IIIA liquids shall not be dispensed into a portable container unless such container does not exceed a 6-gallon (23.7 L) capacity, is *listed* or of *approved* material and construction, and has a tight closure with a screwed or spring-loaded cover so designed that the contents can be dispensed without spilling. Liquids shall not be dispensed into portable or cargo tanks.

It is unlawful to sell, offer for sale or distribute any container for the storage and/or handling of flammable liquids, unless such container has been approved for such purpose under applicable provisions of this code.

* * *

SECTION 2306

FLAMMABLE AND COMBUSTIBLE LIQUID MOTOR FULE-DISPENSING FACILITIES

* * *

2306.2.3 Above-ground tanks located outside, above grade. Above-ground tanks shall not be used for the storage of Class I, II or III liquid motor fuels, except as provided by this section.

1. Above-ground tanks used for outside, above-grade storage of Class I liquids shall be *listed* and *labeled* as protected above-ground tanks in accordance with UL 2085 and shall be in accordance with Chapter 57. Such tanks shall be located in accordance with Table 2306.2.3, and are only allowed to be located outside the *fire district* in industrial zones as defined in the *Seattle Land Use Code.*

2. Above-ground tanks used for outside, above-grade storage of Class II or IIIA liquids shall be *listed* and *labeled* as protected above-ground tanks in accordance with UL 2085 and shall be installed in accordance with Chapter 57. Tank locations shall be in accordance with Table 2306.2.3.

Exception: Other above-ground tanks that comply with Chapter 57 where *approved* by the *fire code official.*

3. Tanks containing fuels shall not exceed 12,000 gallons (45 420 L) in individual capacity or 12,000 ((~~48,000~~)) gallons (181 680 L) in aggregate capacity. Installations with the maximum allowable aggregate capacity shall be separated from other such installations by not less than 100 feet (30 480 mm).

Exception: Tanks containing Class II or IIIA liquid fuels are allowed up to a maximum aggregate capacity of 48,000 gallons (181 680 L) with a maximum aggregate capacity of all flammable and combustible liquids in above-ground tanks of 48,000 gallons (181 680 L).

* * *

2306.2.4 Above-ground tanks located in above-grade vaults or below-grade vaults. Above-ground tanks used for storage of Class I, II or IIIA liquid motor fuels are allowed to be installed in vaults located above grade or below grade in accordance with Section 5704.2.8 and shall comply with Sections 2306.2.4.1 and 2306.2.4.2. Tanks in above-grade vaults shall also comply with Table 2306.2.3.

2306.2.4.1 Tank capacity limits. Tanks storing Class I and Class II liquids at an individual site shall be limited to a maximum individual capacity of ((~~15,000~~)) 12,000 gallons (45 420 L) ((~~56 775 L~~)) and an aggregate capacity of ((~~48,000~~)) 12,000 gallons (45 420 L) ((~~181 680 L~~)).

Exception: Tanks containing Class II or IIIA liquid fuels are allowed up to a maximum aggregate capacity of 48,000 gallons (181 680 L)

* * *

SECTION 2307

LIQUEFIED PETROLEUM GAS MOTOR FUEL-DISPENSING FACILITIES

2307.1 General. Motor fuel-dispensing facilities for liquefied petroleum gas (LP-gas) fuel shall be in accordance with this section and Chapter 61.

2307.1.1 Prohibited locations: Motor fuel-dispensing facilities for liquefied petroleum gas LP-gas) fuel are prohibited in the *fire district.*

* * *

SECTION 2308

COMPRESSED NATURAL GAS MOTOR FUEL-DISPENSING FACILITIES

2308.1 General. Motor fuel-dispensing facilities for compressed natural gas (CNG) fuel shall be in accordance with this section and Chapter 53.

2308.1.1 Prohibited locations: Motor fuel-dispensing facilities for compressed natural gas (CNG) fuel are prohibited in the *fire district.*

* * *

SECTION 2309

HYDROGEN MOTOR FUEL-DISPENSING AND GENERATING FACILTIES

2309.1 General. Hydrogen motor fuel-dispensing and generation facilities shall be in accordance with this section and Chapter 58. Where a fuel-dispensing facility also includes a repair garage, the repair operation shall comply with Section 2311.

2309.1.1 Prohibited locations. Hydrogen motor fuel-dispensing and generation facilities are prohibited in the *fire district.*

* * *

Section 16. Chapter 24 of the 2015 International Fire Code is amended as follows:

CHAPTER 24

FLAMMABLE FINISHES

SECTION 2401

GENERAL

* * *

2401.2 Nonapplicability. This chapter ((~~shall~~)) does not apply to spray finishing utilizing flammable or *combustible liquids* ((~~which do not sustain combustion,~~)) including:

1. Liquids which do not sustain combustion that have no fire point when tested in accordance with ASTM D 92.
2. Liquids which do not sustain combustion with a flashpoint greater than 95°F (35°C) in a water-miscible solution or dispersion with a water and inert (noncombustible) solids content of more than 80 percent by weight.
3. Mobile spray coaters registered with, and meeting the requirements of, the Puget Sound Clean Air Agency.

2401.2 Point of Information

Details relating to the Puget Sound Clean Air Agency's (PSCAA) rules and requirements can be obtained online at:

www.pscleanair.org/regulated/mobilespraycoaters/assistance.aspx

or by contacting PSCAA at (206) 434-8800.

* * *

SECTION 2404

SPRAY FINISHING

* * *

2404.2 Location of spray-finishing operations. Spray finishing operations conducted in buildings used for Group A, E, I or R occupancies shall be located in a spray room protected with an *approved automatic sprinkler system* installed in accordance with Section 903.3.1.1 and separated vertically and horizontally from other areas in accordance with the *International Building Code*. In other occupancies, spray-finishing operations shall be conducted in a spray room, spray booth or spraying space *approved* for such use.

Exceptions:

1. Automobile undercoating spray operations and spray-on automotive lining operations conducted in areas with *approved* natural or mechanical ventilation shall be exempt from the provisions of Section 1504 when *approved* and where utilizing Class IIIA or IIIB *combustible liquids*.
2. In buildings other than Group A, E, I or R occupancies, *approved* limited spraying space in accordance with Section 1504.9.

3. Resin application areas used for manufacturing of reinforced plastics complying with Section 1509 shall not be required to be located in a spray room, spray booth or spraying space.

Spray-finishing operations are allowed in basements only if confined to either an *approved* spray booth or an *approved* spray room protected by an *approved* automatic fire sprinkler system and if such basement is protected throughout by an *approved* automatic sprinkler system in accordance with Chapter 9.

* * *

2404.9.3 Ventilation. Positive mechanical ventilation providing a minimum of six complete air changes per hour shall be installed. Such system shall meet the requirements of this code for handling flammable vapor areas. Explosion venting is not required.

Exception: Negative mechanical ventilation, providing a minimum of six complete air changes per hour, is allowed in lieu of positive mechanical ventilation if a fan rated for Class I, Division 2 hazardous locations in accordance with the Electrical Code is installed.

* * *

Section 17. Chapter 31 of the 2015 International Fire Code is amended as follows:

CHAPTER 31

TENTS AND OTHER MEMBRANE STRUCTURES

* * *

SECTION 3103

TEMPORARY TENTS AND MEMBRANE STRUCTURES

* * *

3103.2 Approval required. Tents and membrane structures having an area in excess of 400 square feet (37 m2) shall not be erected, operated or maintained for any purpose without first obtaining a permit and approval from the *fire code official.*

Exceptions:

1. Tents used exclusively for recreational camping purposes.

2. Tents open on all sides which comply with all of the following:

2.1 Individual tents having a maximum size of 700 square feet (65 m2).

2.2 The aggregate area of multiple tents placed side by side without a fire break clearance of 12 feet (3658 mm), not exceeding 700 square feet (65 m2) total.

2.3 A minimum clearance of 12 feet (3658 mm) to all structures and other tents.

3. Funeral tents and curtains or extensions attached thereto, when used for funeral services.

* * *

SECTION 3104

TEMPORARY AND PERMANENT TENST AND MEMBRANE STRUCTURES

* * *

3104.2 Flame propagation performance treatment. Before a permit is granted, the *owner* or agent shall file with the *fire code official* a certificate executed by an *approved* testing laboratory certifying that the tents and membrane structures and their appurtenances; sidewalls, drops and tarpaulins; floor coverings, bunting and combustible decorative materials and effects, including sawdust when used on floors or passageways, are composed of material meeting the flame propagation performance criteria of Test Method 1 or Test Method 2, as appropriate, NFPA 701, or other *approved* standard, or shall be treated with a flame retardant in an *approved* manner and

meet the flame propagation performance criteria of Test Method 1 or Test Method 2, as appropriate, NFPA 701, and that such flame propagation performance criteria are effective for the period specified by the permit.

3104.2 Point of Information

Accepted flame certificates for decorative materials include:

1. Certificates indicating compliance with NFPA 701.

2. Certificates verifying approval through the California State Fire Marshal.

3. Certificates indicating compliance with CPAI-84 (Canvas Products Association International).

Section 18. Chapter 33 of the 2015 International Fire Code is amended as follows:

* * *

CHAPTER 33

FIRE SAFETY DURING CONSTRUCTION AND DEMOLOTION

SECTION 3301 GENERAL

* * *

3301.1 Scope. This chapter shall apply to structures in the course of construction, *alteration* or demolition, including those in underground locations. Compliance with NFPA 241 is required for items not specifically addressed herein.

Construction, *alteration* and demolition of fixed guideway transit and passenger rail systems tunnels shall comply with NFPA 130 as amended and WAC 296-155, Part Q, underground Construction.

3301.1(A) Point of Information

Adopted local amendments to NFPA 130 can be accessed at

http://www.seattle.gov/fire/FMO/firecode/nfpaAmendments.htm

Construction, *alteration* and demolition of road tunnels shall comply shall comply with NFPA 502 as amended and WAC 296-155, Part Q, Underground Construction.

3301.1(B) Point of Information

Adopted local amendments to NFPA 502 can be accessed at

http://www.seattle.gov/fire/FMO/firecode/nfpaAmendments.htm .

3301.2 Purpose. This chapter prescribes minimum safeguards for construction, *alteration* and demolition operations to provide reasonable safety to life and property from fire during such operations.

3301.3 Alterations and additions. Required exits, existing structural elements, and fire protection devices shall be maintained at all times during alterations, repairs or additions to any building or structure.

Exceptions:

1. When such required elements or devices are being altered, adequate substitute provisions shall be made.
2. Maintenance of such elements and devices is not required when the existing building is not occupied.

SECTION 3302

DEFINITIONS

3302.1 Terms defined in Chapter 2. Words and terms used in this chapter and defined in Chapter 2 shall have the meanings ascribed to them as defined therein.

ADDITION.

ALTERATION.

CHANGE OF OCCUPANCY.

EXISTING BUILDING, EXISTING STRUCTURE.

REHABILITATION.

REPAIR.

SUBSTANTIAL ALTERATION.

SECTION 3303

TEMPORARY HEATING EQUIPMENT

3303.1 Listed. Temporary heating devices shall be *listed* and *labeled* in accordance with the *International Mechanical Code* or the *International Fuel Gas Code*. Installation, maintenance and use of temporary heating devices shall be in accordance with the terms of the listing.

3303.2 Oil-fired heaters. Oil-fired heaters shall comply with Section 603.

3303.3 LP-gas heaters. Fuel supplies for liquefied-petroleum gas-fired heaters shall comply with this section, Chapter 61 and the *International Fuel Gas Code*.

3303.3.1 LP-gas containers are allowed to be used in buildings or areas of buildings under construction or undergoing alterations as set comply with this section.

3303.3.2 LPG cylinders, equipment, piping, and appliances shall comply with NFPA 58 6.20.2.

3303.3.3 LPG cylinders used and transported for temporary heating in buildings or structures under construction or undergoing substantial alteration and such buildings are not occupied by the public, shall comply with the following:

1. Liquefied-petroleum gas (LPG) fired heaters used for temporary heating in buildings under construction or undergoing substantial alteration shall be located at least 6 ft (1.8 m) from any LPG cylinder.

Exception: Integral heater-cylinder units specifically designed for the attachment of the heater to the cylinder, or to a supporting standard attached to the cylinder, and designed and installed to prevent direct or radiant heat application to the cylinder shall be exempt from the spacing requirement above.

2. Blower-type and radiant-type units shall not be directed toward any cylinder within 20 ft (6.1 m).
3. If two or more heater-cylinder units of either the integral or non-integral type are located in an unpartitioned area on the same floor, the cylinder(s) of each such unit shall be separated from the cylinder(s) of any other such unit by at least 20 ft (6.1 m).
4. If heaters are connected to cylinders manifolded together for use in an unpartitioned area on the same floor, the total water capacity of cylinders manifolded together serving any one heater shall not be greater than 735 lb (333 kg) [nominal 300 lb (136 kg) propane capacity]. If there is more than one such manifold, it shall be separated from any other by at least 20 ft (6.1 m).
5. Where cylinders are manifolded together for connection to a heater(s) on another floor, the following shall apply:

a. Heaters shall not be installed on the same floors with manifolded cylinders.
b. The total water capacity of the cylinders connected to any one manifold shall not be greater than 2450 lb (1111 kg) [nominal 1000 lb (454 kg) propane capacity].

c. Manifolds of more than 735 lb (333 kg) water capacity [nominal 300 lb (136 kg) propane capacity], if located in the same unpartitioned area, shall be separated from each other by at least 50 ft (15 m).

3303.3.4 The use and transportation of LPG cylinders in the unoccupied portions of buildings or structures under construction or undergoing substantial alteration that are partially occupied by the public shall be approved by the fire code official.

3303.3.5 Cylinders used and transported for repair or minor renovation in buildings frequented by the public during the hours the public normally occupies the building shall comply with the following:

1. The maximum water capacity of individual cylinders shall be 50 lb (23 kg) [nominal 20 lb (9.1 kg) propane capacity], and the number of cylinders in the building shall not exceed the number of workers assigned to the use of the propane.
2. Cylinders having a water capacity greater than 2.7 lb (1.2 kg) shall not be left unattended.

3303.3.6 During the hours the building is not open to the public, cylinders used and transported within the building for repair or minor renovation and with a water capacity greater than 2.7 lb (1.2 kg) shall not be left unattended.

3303.3.7 Portable heaters, including salamanders, shall comply with the following:

1. Portable heaters shall be equipped with an approved automatic device to shut off the flow of gas to the main burner and to the pilot, if used, in the event of flame extinguishment or combustion failure.
2. Portable heaters shall be self-supporting unless designed for cylinder mounting.
3. Portable heaters shall not be installed utilizing cylinder valves, connectors, regulators, manifolds, piping, or tubing as structural supports.

4. Portable heaters having an input of more than 50,000 Btu/hr (53 MJ/hr) shall be equipped with either a pilot that must be lighted and proved before the main burner can be turned on or an approved electric ignition system.

Exceptions:

1. Portable heaters with less than 7500 Btu/hr (8 MJ/hr) input if used with cylinders having a maximum water capacity of 2.7 lb (1.2 kg) and filled with not more than 16.8 oz (0.522 kg) of LP-Gas.

3303.3((4))8 Refueling. Refueling operations for liquid-fueled equipment or appliances shall be conducted in accordance with Section 5705. The equipment or appliance shall be shut down and allowed to cool prior to refueling.

3303.3((5))9 Installation. Clearance to combustibles from temporary heating devices shall be maintained in accordance with the *labeled* equipment. When in operation, temporary heating devices shall be fixed in place and protected from damage, dislodgement or overturning in accordance with the manufacturer's instructions.

3303.3((6))10 Supervision. The use of temporary heating devices shall be monitored for safe operation and maintained only by properly trained personnel.

3303.3.11 LP-Gas Storage. LP-gas cylinders not connected for use-shall be stored outside of buildings in locked, ventilated metal cabinets or other approved enclosures located in accordance with Table 6109.12.

3303.3.11.1 Alternative location and protection of storage. Where the provisions of Sections 3303.11 are impractical at construction sites, or at buildings or structures undergoing major renovation or repairs, the storage of containers shall be as required by the fire code official.

3303.3.12 Fire District Prohibition. Storage and use of LP-gas containers having an individual capacity in excess of 239 pounds (108.4 kg) water capacity [nominal 100 pounds (48.3 kg) LP-gas] and all stationary installations are prohibited in the Fire District.

SECTION 3304

PRECAUTIONS AGAINST FIRE

3304.1 Smoking. Smoking shall be prohibited except in approved areas. Signs shall be posted in accordance with Section 310. In *approved* areas where smoking is permitted, *approved* ashtrays shall be provided in accordance with Section 310.

3304.2 Combustible debris, rubbish and waste. Combustible debris, rubbish and waste material shall comply with the requirements of Sections 3304.2.1 through 3304.2.4.

3304.2.1 Combustible waste material accumulation. Combustible debris, rubbish and waste material shall not be accumulated within buildings.

3304.2.2 Combustible waste material removal. Combustible debris, rubbish and waste material shall be removed from buildings at the end of each shift of work.

3304.2.3 Rubbish containers. ((~~Where rubbish~~)) Rubbish containers with a capacity exceeding 5.33 cubic feet (40 gallons) (0.15 m^3) ((~~are~~)) used for temporary storage of combustible debris, rubbish and waste material, ((~~they~~)) shall have tightfitting or self-closing lids. Such rubbish containers and lids shall be constructed entirely of noncombustible materials or of combustible materials ((~~that comply~~)) with a peak rate of heat release not exceeding 300 kW/m^2 when tested in accordance with ASTM E 1354 at an incident heat flux of 50 kW/m^2 in the horizontal orientation. ((~~either of the following~~))

Exceptions:

1. Wastebaskets complying with Section 808.

2. Waste accumulated for collection by the City's solid waste utility shall be stored in containers (to include recycling containers) specified in the City's solid waste collection contracts authorized by ordinance.
3. Containers in areas protected by an *approved automatic sprinkler system* installed throughout in accordance with Section 903.3.1.1, 903.3.1.2 or 903.3.1.3.

((~~1 Noncombustible materials.~~

~~2 Materials that meet a peak rate of heat release not exceeding 300 kW/m² when tested in accordance with ASTM E 1354 at an incident heat flux of 50 kW/m² in the horizontal orientation.~~))

3304.2.4 Spontaneous ignition. Materials susceptible to spontaneous ignition, such as oily rags, shall be stored in a listed disposal container. Contents of such containers shall be removed and disposed of daily.

3304.2.5 Trash Chutes. Trash chutes used on the exterior of a building shall be of noncombustible construction, or shall be protected in accordance with the following, if of combustible construction:

1. The interior of combustible trash chutes shall be provided with not less than one temporary automatic sprinkler within a recess near the top of the chute.
2. The temporary sprinkler shall be protected by the recess as well as a listed sprinkler guard.
3. The temporary sprinkler shall be connected to any available water supply with a listed fire hose, or a flexible, commercial rubber hose, with a diameter of not less than 19 mm (3⁄4 in.) and a listed flexible connector.
4. The temporary sprinkler shall be protected against freezing where required by the fire code official.

3304.3 Burning of combustible debris, rubbish and waste. Combustible debris, rubbish and waste material shall not be disposed of by burning on the site ((~~unless approved~~)).

3304.4 Open burning. Open burning is prohibited in the City of Seattle. ((~~shall comply with Section 307~~.))

3304.5 Fire watch. When required by the *fire code official* for building demolition, or building construction during working hours that is hazardous in nature, qualified personnel shall be provided to serve as an on-site fire watch. Fire watch personnel shall be provided with at least one *approved* means for notification of the fire department and their sole duty shall be to perform constant patrols and watch for the occurrence of fire, extinguishing spot or incipient phase fires and communicating an alarm.

3304.5.1 A fire watch shall be provided during hot work activities and shall continue for a minimum of 30 minutes after the conclusion of the work. The fire prevention program superintendent is authorized to extend the fire watch based on the hazards or work being performed.

Exception: Where the hot work area has no fire hazards or combustible exposures.

3304.5.2 A fire watch shall be posted for the duration of the work and for 2 hours thereafter for torch-applied roofing operations.

3304.5.3 The fire watch shall include the entire hot work area. Hot work conducted in areas with vertical or horizontal fire exposures that are not observable by a single individual shall have additional personnel assigned to fire watches to ensure that exposed areas are monitored.

3304.5.4 Individuals designated to fire watch duty shall have fire-extinguishing equipment readily available and shall be trained in the use of such equipment.

3304.5.5 The individuals responsible for performing hot work and individuals responsible for providing the fire watch shall be trained in the use of portable fire extinguishers.

3304.6 Hot Work ((~~**Cutting and welding.**~~)) Operations involving hot work ((~~the use of cutting and welding~~)) shall be done in accordance with Chapter 35.

3304.6.1 Hot work shall only be conducted in areas designed or authorized for that purpose by the fire prevention program superintendent.

3304.6.2 Hot work shall not be conducted in the following areas unless approval has been obtained from the fire code official:

1. Areas where the sprinkler system is impaired.
2. Areas where there exists the potential of an explosive atmosphere, such as locations where flammable gases, liquids or vapors are present.
3. Areas with readily ignitable materials, such as storage of large quantities of bulk sulfur, baled paper, cotton, lint, dust or loose combustible materials.

3304.6.3 Portable LP-gas containers are allowed to be used to supply approved self-contained torch assemblies or similar appliances. Such containers shall not exceed a water capacity of 21/2 pounds (1 kg).

3304.7 Electrical. Temporary wiring for electrical power and lighting installations used in connection with the construction, *alteration* or demolition of buildings, structures, equipment or similar activities shall comply with NFPA 70.

3304.7.1 All temporary branch circuits shall originate in an approved power outlet or panelboard. Conductors shall be permitted within multi-conductor cord or cable assemblies or as open conductors. All conductors shall be protected by overcurrent devices rated for the ampacity of the conductors. Runs of open conductors shall be located where the conductors are not subject to

physical damage, and the conductors shall be fastened at intervals not exceeding 10 feet (3 m). Each branch circuit that supplies receptacles or fixed equipment shall contain a separate equipment grounding conductor where run as an open conductor.

3304.7.2 Temporary lights shall be equipped with guards to prevent accidental contact with the bulb unless the construction of the reflector is such that the bulb is deeply recessed. Temporary lighting fixtures, such as quartz, that operate at temperatures capable of igniting ordinary combustibles shall be fastened securely so that the possibility of their coming in contact with such materials is precluded. Temporary lights shall be equipped with heavy-duty electrical cords with connections and insulation maintained in safe condition. Temporary lights shall not be suspended by their electrical cords unless such cords and lights have been designed for that purpose. Splices shall have insulation equivalent to that of the cable. Temporary wiring shall be removed immediately upon the completion of the construction or purpose for which the wiring was installed.

3304.8 Site security. Guard service and/or security fences shall be provided where required by the fire code official.

3304.8.1 Where guard service is provided, the guard(s) shall be trained in all of the following:

1. Notification procedures that include calling the fire department and management personnel
2. Function and operation of fire protection equipment
3. Familiarization with fire hazards
4. Use of construction elevators, where provided
5. Any special status of emergency equipment or hazards.

3304.8.2 Where guard service is provided, the fire prevention program superintendent shall be responsible for the guard service.

3304.8.3 Entrances (e.g., doors and windows) to the structure under construction, alteration, or demolition shall be secured where required by the fire code official.

SECTION 3305

FLAMMABLE AND COMBUSTIBLE LIQUIDS

3305.1 ((~~Storage of flammable~~)) Flammable and combustible liquids. Temporary storage and dispensing of Class I and II liquids for private use ~~Storage of flammable and *combustible liquids*~~ at construction sites shall be in accordance with Sections 5701, 5703, 5704 and 5705 except as provided in Sections 3505.1.1 through 3505.1.8.1 ((~~5704~~)).

Exception: Storage and use of fuel oil and containers connected with oil-burning equipment regulated by Section 603 and the International Mechanical Code.

3305.1.1 Combustibles and open flames near tanks. Storage areas shall be kept free from weeds and extraneous combustible material. Open flames and smoking are prohibited in flammable or combustible liquid storage areas. "No Smoking" signs shall be posted in a conspicuous location in each structure or location in which smoking is prohibited. The content, lettering, size, color and location of required "No Smoking" signs shall be approved. Storage areas shall be appropriately posted with markings in accordance with NFPA 704, Standard System for the Identification of the Hazards of Materials for Emergency Response.

3305.1.2 Marking of tanks and containers. Tanks and containers for the storage of liquids above ground shall be conspicuously marked with the name of the product which they contain and the words: FLAMMABLE—KEEP FIRE AND FLAME AWAY. Tanks shall bear the additional marking: KEEP 50 FEET FROM BUILDINGS.

3305.1.3 Containers for storage and use. Metal containers used for storage of Class I or II liquids shall be in accordance with DOTn requirements or shall be of an approved design.

Discharge devices shall be of a type that do not develop an internal pressure on the container. Pumping devices or approved self-closing faucets used for dispensing liquids shall not leak and shall be well-maintained. Individual containers shall not be interconnected and shall be kept closed when not in use. Containers stored outside of buildings shall be in accordance with Section 5704 and the International Building Code.

3305.1.4 Temporary tanks. The capacity of above-ground tanks containing Class I or II liquids shall not exceed 10,000 gallons (37 854 L). Tanks shall be of the single-compartment design.

3305.1.4.1 Fill-opening security. Fill openings shall be equipped with a locking closure device. Fill openings shall be separate from vent openings.

3305.1.4.2 Vents. Tanks shall be provided with a method of normal and emergency venting. Normal vents shall also be in accordance with Section 5704.2.7.3. Emergency vents shall be in accordance with Section 5704.2.7.4. Emergency vents shall be arranged to discharge in a manner which prevents localized overheating or flame impingement on any part of the tank in the event that vapors from such vents are ignited.

3305.1.4.3 Location. Tanks containing Class I or II liquids shall be kept outside and at least 50 feet (15 240 mm) from buildings and combustible storage. Additional distance shall be provided when necessary to ensure that vehicles, equipment and containers being filled directly from such tanks will not be less than 50 feet (15 240 mm) from structures, or other combustible storage.

3305.1.4.4 Locations where above-ground tanks are prohibited. The storage of Class I and II liquids in above-ground tanks is prohibited within the limits established by law as the limits of districts in which such storage is prohibited

3305.1.5 Type of tank. Tanks shall be provided with top openings only or shall be elevated for gravity discharge.

3305.1.5.1 Tanks with top openings only. Tanks with top openings shall be mounted as follows:

1. On well-constructed metal legs connected to shoes or runners designed so that the tank is stabilized and the entire tank and its supports can be moved as a unit; or

2. For stationary tanks, on a stable base of timbers or blocks approximately 6 inches (152 mm) in height which prevents the tank from contacting the ground.

3305.1.5.1.1 Pumps and fittings. Tanks with top openings only shall be equipped with a tightly and permanently attached, approved pumping device having an approved hose of sufficient length for filling vehicles, equipment or containers to be served from the tank. Either the pump or the hose shall be equipped with a padlock to its hanger to prevent tampering. An effective anti-siphoning device shall be included in the pump discharge unless a self-closing nozzle is provided. Siphons or internal pressure discharge devices shall not be used.

3305.1.5.2 Tanks for gravity discharge. Tanks with a connection in the bottom or the end for gravity-dispensing liquids shall be mounted and equipped as follows:

1. Supports to elevate the tank for gravity discharge shall be designed to carry all required loads and provide stability.

2. Bottom or end openings for gravity discharge shall be equipped with a valve located adjacent to the tank shell which will close automatically in the event of fire through the operation of an effective heat-activated releasing device. Where this valve cannot be operated manually, it shall be supplemented by a second, manually operated valve. The gravity discharge outlet shall be provided with an approved hose equipped with a self-closing valve at the discharge end of a type that can be padlocked to its hanger.

3305.1.6 Spill control drainage control and diking. Indoor storage and dispensing areas shall be provided with spill control and drainage control as set forth in Section 5703.4 when the

quantity exceeds 30 gallons of Class I flammable liquids or 120 gallons of Class II combustible liquids. Outdoor storage areas shall be provided with drainage control or diking as set forth in Section 5704.2.10 when the quantity exceeds 660 gallons aggregate of Class I and II flammable and combustible liquids.

Exception: Spill control and diking is not required for listed secondary containment tanks.

3305.1.6.1 Leakage and spills. Leaking vessels shall be immediately repaired or taken out of service and spills shall be cleaned up and disposed of properly.

3305.1.7 Portable fire extinguishers. Portable fire extinguishers with a minimum rating of 20-B:C and complying with Section 906 shall be provided where required by the fire code official.

3305.1.8 Dispensing from tank vehicles. Where approved, liquids used as fuels are allowed to be transferred from tank vehicles into the tanks of motor vehicles or special equipment, provided:

1. The tank vehicle's specific function is that of supplying fuel to motor vehicle fuel tanks.
2. The dispensing hose does not exceed 100 feet (30 480 mm) in length.
3. The dispensing nozzle is an approved type.
4. The dispensing hose is properly placed on an approved reel or in a compartment provided before the tank vehicle is moved.
5. Signs prohibiting smoking or open flames within 25 feet (7620 mm) of the vehicle or the point of refueling are prominently posted on the tank vehicle.
6. Electrical devices and wiring in areas where fuel dispensing is conducted are in accordance with NFPA 70.
7. Tank vehicle-dispensing equipment is operated only by designated personnel who are trained to handle and dispense motor fuels.

8. Provisions are made for controlling and mitigating unauthorized discharges.

3505.1.8.1 Location. Dispensing from tank vehicles shall be conducted at least 50 feet (15 240 mm) from structures or combustible storage.

3305.2 ((~~Class I and Class II liquids~~)) Floor surfacing and finishing operations. ((~~The storage, use and handling of flammable and combustible liquids at construction sites shall be in accordance with Section 5706.2. Ventilation shall be provided for operations involving the~~)) ((~~materials containing flammable solvents~~)) Floor surfacing and finishing operations exceeding 350 square feet (33 m2) and using Class I or II liquids shall be in accordance with Section 2410.

* * *

SECTION 3307

EXPLOSIVE MATERIALS

3307.1 Storage and handling. *Explosive* materials shall be stored, used and handled in accordance with Chapter 56 and NFPA 495.

3307.2 ((~~Supervision~~)) Blasting. Blasting operations shall be conducted only by approved, competent operators familiar with the required safety precautions and the hazards involved and in accordance with Chapter 56 and NFPA 495.

3307.2.1 Before approval to do blasting is issued, the applicant shall obtain and provide documentation of liability insurance in accordance with Section 105.3.9.

((~~**3307.3 Demolition using explosives.** *Approved* fire hoses for use by demolition personnel shall be maintained at the demolition site whenever *explosives* are used for demolition. Such fire hoses shall be connected to an *approved* water supply and shall be capable of being brought to bear on post-*detonation* fires anywhere on the site of the demolition operation.~~))

SECTION 3308

OWNER'S RESPONSIBILITY FOR FIRE PROTECTION

3308.1 Program superintendent. The *owner* shall designate a person to be the fire prevention program superintendent who shall be responsible for the fire prevention program and ensure that it is carried out through completion of the project. The fire prevention program superintendent shall have the authority to enforce the provisions of this chapter and other provisions as necessary to secure the intent of this chapter. ((~~Where guard service is provided, the superintendent shall be responsible for the guard service.~~))

3308.2 Prefire plans. The fire prevention program superintendent shall develop and maintain a((~~n *approved*~~)) prefire plan. ((~~in cooperation with the fire chief.~~)) When required by the fire code official, the prefire plan shall be submitted for approval. The ((~~fire chief and the~~)) *fire code official* shall be notified of changes affecting the utilization of information contained in such prefire plans.

3308.2.1 Prefire plan contents. The prefire plan shall contain the following information:

1. Communication and pre-planning with the fire department.
2. Procedures for reporting emergencies to the Fire department.
3. Procedures for emergency notification, evacuation and/or relocation of all persons in the building under construction and on the site.
4. Procedures for hot work operations, management of hazardous materials and removal of combustible debris and maintenance of emergency access roads.
5. Security measures to prevent unauthorized people from gaining access to the site
6. Installation of new fire protection systems, where applicable, as construction progresses.
7. Floor plans identifying the locations of exits, exit stairs, exit routes and portable fire extinguishers.

8. Site plans identifying the designated exterior assembly areas for each evacuation route.
9. Site plans identifying required fire apparatus access roadways and on-site fire hydrants.
10. The name and contact phone number of the person(s) responsible for compliance with the Fire Protection Plan.

3308.3 Training. Training of responsible personnel in the use of fire protection equipment shall be the responsibility of the fire prevention program superintendent.

3308.4 Fire protection devices. The fire prevention program superintendent shall determine quantity and type of fire protection equipment and that all fire protection equipment is maintained and serviced in accordance with this code. ((~~The quantity and type of fire protection equipment shall be *approved*.~~))

3308.5 Hot work operations. The fire prevention program superintendent shall be responsible for supervising the permit system for hot work operations in accordance with Chapter 35.

3308.6 Impairment of fire protection systems. ((~~Impairments to any *fire protection system* shall be in accordance with Section 901.~~)) Where a fire protection system is out of service, the procedures detailed in Administrative Rule 9.02.14, Impaired Fire Protection Systems and any future revisions of this rule adopted by the fire code official shall be implemented.

3308.6.1 The fire prevention program superintendent shall be the impairment coordinator to comply with the requirements of this section. In the absence of the fire prevention program superintendent, the building owner shall be considered the impairment coordinator.

3308.7 Temporary covering of fire protection devices. Coverings placed on or over fire protection devices to protect them from damage during construction processes shall be immediately removed upon the completion of the construction processes in the room or area in which the devices are installed.

3308.8 Self-inspections. The fire prevention program superintendent shall be responsible to implement a weekly self-inspection program. Records of the inspections shall be maintained and made available to the fire code official upon request.

3308.8.1 Self-inspection content. The self-inspection program shall include verification of the following:

1. Provision, location and maintenance of fire protection equipment.
2. Provision of appropriate safety and warning signs
3. Adequate housekeeping and waste disposal practices.
4. Verification that all applicable permits have been obtained.
5. Adequate precautions used for hazardous activities such as hot work, blasting, flammable liquid storage and use.

* * *

SECTION 3310

ACCESS FOR FIRE FIGHTING

3310.1 Required access. Approved ((~~vehicle~~)) fire apparatus access ((~~for fire fighting~~))shall be provided to all construction or demolition sites at the start of the project and maintained until completion. Fire apparatus access roads shall have an unobstructed width of not less than 20 feet (6096 mm), exclusive of shoulders, except for approved security gates in accordance with Section 503.6, and an unobstructed vertical clearance of not less than 14 feet.

Fire apparatus access shall be provided to within 150 feet of all portions of the facility and all portions of the exterior walls of the first story of the building as measured by an approved route around the exterior of the building or facility. Fire apparatus ((~~Vehicle~~)) access shall be provided to within 100 feet (30 480 mm) of temporary or permanent fire department

connections. ((~~Vehicle~~)) Fire apparatus access shall be provided by either temporary or permanent roads, capable of supporting vehicle loading under all weather conditions. ((~~Vehicle~~)) Fire apparatus access shall be maintained until permanent fire apparatus access roads are available. "No parking" signs or other appropriate notices, or both, prohibiting obstruction shall be provided and shall be maintained.

3310.2 Key boxes. ((~~Key boxes shall be provided as required by Chapter 5.~~)) Where access to or within a structure or an area is restricted because of secured openings or where immediate access is necessary for life-saving or fire-fighting purposes, the fire code official is authorized to require a key box to be installed in an approved location. The key box shall be of an approved type and shall contain keys to gain necessary access as required by the fire code official.

3310.3 Hoists and Elevators. Where hoists and elevators provide the only efficient means of transporting hose and other cumbersome fire-fighting equipment to upper floors, they shall be available to the fire department whenever necessary.

SECTION 3311

MEANS OF EGRESS

[B] 3311.1 Stairways required. Where a building has been constructed to a *building height* of 50 feet (15 240 mm) or four stories, or where an existing building exceeding 50 feet (15 240 mm) in *building height* is altered, at least one temporary lighted *stairway* shall be provided unless one or more of the permanent *stairways* are erected as the construction progresses.

3311.2 Maintenance. ((~~Required *means of egress* shall be maintained during construction and demolition, remodeling or *alterations* and additions to any building.~~)) Buildings, or portions of buildings, shall be permitted to be occupied during construction, repair, alterations, or additions

only where required means of egress are in place and continuously maintained for the portion occupied or where approved alternative life safety measures are in place.

Exception: Existing means of egress need not be maintained where ((~~*Approved*~~)) temporary *means of egress* systems and facilities approved by the building code official are provided.

3311.3 Stairway floor number signs. Temporary stairway floor number signs shall be provided in accordance with the requirements of Section 1022.8.1.

3311.4 Flammable or explosive substances or equipment for repairs or alterations shall be permitted in a building while the building is occupied if the condition of use and safeguards provided do not create any additional danger or impediment to egress beyond the normally permissible conditions in the building.

SECTION 3312

WATER SUPPLY FOR FIRE PROTECTION

3312.1 When required. An *approved* water supply for fire protection, either temporary or permanent, shall be made available as soon as combustible material arrives on the site.

3312.2 Where underground water mains and hydrants are to be provided, they shall be installed, completed, and in service prior to commencing construction work on any structure.

3312.3 Free access from the street to fire hydrants and to outside connections for standpipes, sprinklers, or other fire extinguishing equipment, whether permanent or temporary, shall be provided and maintained at all times.

3312.4 Protective pedestrian walkways shall not be constructed so that they impede access to hydrants.

3312.5 No material or construction shall interfere with access to hydrants, fire department connections, or fire extinguishing equipment.

SECTION 3313

STANDPIPES

3313.1 Where required. In buildings required to have standpipes by Section 905.3.1, not less than one standpipe shall be provided for use during construction. Such standpipes shall be installed prior to construction exceeding 40 feet (12 192 mm) in height above the lowest level of fire department ((~~vehicle~~)) apparatus access. ((~~Such standpipe shall be provided with fire department hose connections at accessible locations adjacent to usable stairways. Such standpipes shall be extended as construction progresses to within one floor of the highest point of construction having secured decking or flooring.~~))

3313.1.1 The standpipes shall be provided with conspicuously marked and readily accessible fire department connections on the outside of the building at the street level and shall have at least one standard hose outlet at each floor. The standpipes shall be securely supported and restrained at each alternate floor.

3313.1.2 At least one approved hose valve for attaching fire department hose shall be provided at each intermediate landing or floor level in the exit stairway, as determined by the authority having jurisdiction. Valves shall be kept closed at all times and guarded against mechanical injury.

3313.1.3 The standpipes shall be extended up with each floor and shall be securely capped at the top. Top hose outlets shall be not more than one floor below the highest forms, staging, and similar combustibles at all times.

((~~**3313.2 Buildings being demolished.** Where a building is being demolished and a standpipe is existing within such a building, such standpipe shall be maintained in an operable condition so as~~

~~to be available for use by the fire department. Such standpipe shall be demolished with the building but shall not be demolished more than one floor below the floor being demolished.~~))

3313.((~~3~~))2 Detailed requirements. Standpipes shall be installed in accordance with the provisions of Section 905.

Exception: Standpipes shall be either temporary or permanent in nature, and with or without a water supply, provided that such standpipes comply with the requirements of Section 905 as to capacity, outlets and materials.

SECTION 3314

AUTOMATIC SPRINKLER SYSTEM

3314.1 Completion before occupancy. In buildings where an *automatic sprinkler system* is required by this code or the *International Building Code*, it shall be unlawful to occupy any portion of a building or structure until the *automatic sprinkler system* installation has been tested and *approved*, ((~~except as provided in Section 105.3.4~~)) unless approved by the building code official.

3314.1.1 The provision of 3314.1 shall not prohibit occupancy of the lower floors of a building, even where the upper floors are in various stages of construction or protection, provided the following conditions are satisfied:

1. The sprinkler protection of the lower occupied floors is completed and tested in accordance with 3314.1.
2. The lower floor sprinkler protection is supplied is such a manner that it's water supply does not have to be shut-off to facilitate the sprinkler system installation on the upper floors, except for a one time closure to complete the riser installation.

3314.2 Operation of valves. Operation of sprinkler control valves shall be allowed only by ((~~properly authorized~~)) personnel ((~~and shall be accompanied by notification of duly designated parties~~)) who have obtained the proper certificate from the fire code official in accordance with Administrative Rule 9.01.15, Certification for Installing, Maintaining and Testing Life Safety Systems and Equipment, and any future revision of this rule adopted by the fire code official. The Seattle Fire Department must be notified in accordance with Administrative Rule 9.04.14, Impaired Fire Protection Systems and any future revision of this rule adopted by the fire code official if a planned or emergency impairment is anticipated to take a system out of service for more than eight hours. When the sprinkler protection is being regularly turned off and on to facilitate connection of newly completed segments, the sprinkler control valves shall be checked at the end of each work period to ascertain that protection is in service.

SECTION 3315

PORTABLE FIRE EXTINGUISHERS

3315.1 Where required. Structures under construction, *alteration* or demolition shall be provided with not less than one *approved* portable fire extinguisher in accordance with Section 906 and sized for not less than ordinary hazard as follows:

1. At each *stairway* on all floor levels where combustible materials have accumulated.
2. In every storage and construction shed.
3. Additional portable fire extinguishers shall be provided where special hazards exist including, but not limited to, the storage and use of flammable and *combustible liquids*.
4. In every room or space within the building used for storage, a dressing room, or a workshop.

5. Temporary enclosures shall be equipped with a minimum of one fire extinguisher suitable for all classes of fires that are expected inside the enclosure located so that travel distance to a fire extinguisher does not exceed 50 ft.
6. A minimum of one portable fire extinguisher complying with Section 906 and with a minimum 2-A:20-B:C rating shall be readily accessible within 30 feet (9144 mm) of the location where hot work is performed.

SECTION 3316

MOTORIZED CONSTRUCTION EQUIPMENT

3316.1 Conditions of use. Internal-combustion-powered construction equipment, such as air compressors, hoists, derricks, pumps, and similar devices, shall be used in accordance with all of the following conditions:

1. Equipment shall be located so that exhausts do not discharge against combustible material.
2. Exhausts shall be piped to the outside of the building. A clearance of at least 9 in. (230 mm) shall be maintained between such piping and combustible material.
3. ((~~Equipment~~)) Internal-combustion-powered equipment shall ((~~not be refueled while in operation~~)) be shut down and allowed to cool sufficiently prior to refueling.
4. Fuel for equipment shall be stored in an *approved* area outside of the building.

SECTION 3317

SAFEGUARDING ROOFING OPERATIONS

3317.1 General. Roofing operations utilizing heat-producing systems or other ignition sources shall be conducted in accordance with Sections 3317.2, ((~~and~~)) 3317.3 and Chapter 35.

3317.2 Asphalt ((~~and~~)) (tar) kettles. Asphalt ((~~and~~)) (tar) kettles shall be operated in accordance with Section ((~~303~~)) 3317.2.1 through 3317.2.8.

3317.2.1 Asphalt (tar) kettles shall not be located within 20 feet (6096 mm) of any combustible material, combustible building surface or any building opening and within a controlled area identified by the use of traffic cones, barriers or other approved means.

3317.2.2 Asphalt (tar) kettles and pots shall not be utilized inside or on the roof of a building or structure. Roofing kettles and operating asphalt (tar) kettles shall not block means of egress, gates, roadways or entrances. In no case shall kettles be closer than 10 feet (3000 mm) from exits or means of egress.

Exception: Rubberized asphalt melters are allowed to be utilized on the roofs of a building or structure.

3317.2.3 Fuel containers shall be located at least 10 feet (3048 mm) from the burner.

Exception: Containers properly insulated from heat or flame are allowed to be within 2 feet (610 mm) of the burner.

3317.2.4 An operating kettle shall be attended by a minimum of one employee knowledgeable of the operations and hazards. The employee shall be within 25 feet (7600 mm) of the kettle and have the kettle within sight. Ladders or similar obstacles shall not form a part of the route between the attendant and the kettle.

3317.2.5 Hi-boys shall be constructed of noncombustible materials. Hi-boys shall be limited to a capacity of 55 gallons (208 L). Fuel sources or heating elements shall not be allowed as part of a hi-boy.

3317.2.6 Asphalt (tar) kettles shall be equipped with tightfitting lids that can be closed by means of gravity constructed of steel having a thickness of not less than No. 14 manufacturer's standard gauge [0.075 in. (2 mm)].

3317.2.7 Roofing kettles shall be constructed of noncombustible materials.

3317.2.8 Used roofing mops and rags shall be cleaned of excessive asphalt and stored away from the building and combustible materials. Discarded roofing mops and rags shall not be in contact with combustibles.

3317.2.9 Fuel containers that operate under air pressure shall not exceed 20 gallons (76 L) in capacity and shall be approved.

3317.3 Fire extinguishers for roofing operations. Fire extinguishers shall comply with Section 906. There shall be not less than one multipurpose portable fire extinguisher with a minimum 3-A 40-B:C rating on the roof being covered or repaired.

SECTION 3318

DEMOLITION

3318.1 Construction documents. Construction documents and a schedule for demolition shall be submitted where required by the building code official. Where such information is required, no work shall be done until such construction documents or schedule, or both, are approved.

3318.2 Pedestrian protection. The work of demolishing any building shall not be commenced until pedestrian protection is in place as required by Chapter 33 of the Building Code and the Street Use Ordinance, Seattle Municipal Code Title 15.

3318.3 Means of egress. A horizontal exit shall not be destroyed unless and until a substitute means of egress has been provided and approved.

3318.4 Standpipes. Where a building is being demolished and a standpipe is existing within such a building, such standpipe shall be maintained in an operable condition in conformity with the progress of demolition activity in such a manner so as to be available for use by the fire department. Such standpipe shall be demolished with the building but shall not be demolished more than one floor below the floor being demolished.

3318.5 Demolition using explosives. If explosives are used in demolition work (implosion), hose lines, at least two of 1 1/2 in. diameter or 2 1/2 in. diameter shall be provided in the immediate vicinity of the demolition site during the actual detonation for use by demolition personnel. The required hose lines shall be connected to an approved water supply and shall be of sufficient length to be capable of extinguishing any small fire anywhere on the demolition site after detonation.

3318.6 Underground tanks. When demolition occurs, all underground tanks on the site shall either be removed or filled, as required by this code.

3318.7 Utility connections. Service utility connections shall be discontinued and capped in accordance with requirements of the governing utility or agency including, but not limited to, Seattle Public Utilities, Seattle Department of Transportation, Seattle Department of Planning and Development, Seattle Fire Department, Seattle City Light, Puget Sound Energy, and Qwest Communications.

3318.8 Removal of hazardous and combustible materials. All asbestos and other hazardous material shall be removed prior to demolition, in accordance with regulations of the Environmental Protection Agency, the Puget Sound Clean Air Agency, and other pertinent agencies. Combustible waste shall be removed in accordance with the International Fire Code.

* * *

Section 19. Chapter 34 of the 2015 International Fire Code is amended as follows:

CHAPTER 34

TIRE REBUILDING AND TIRE STORAGE

* * *

SECTION 3402

DEFINITIONS

3402.1 Terms defined in Chapter 2. Words and terms used in this chapter and defined in Chapter 2 shall have the meanings ascribed to them as defined therein.

SCRAP TIRE.

MISCELLANEOUS TIRE STORAGE.

* * *

SECTION 3405

OUTDOOR STORAGE

* * *

3405.4 Distance from lot lines and buildings. Tire storage piles in excess of 500 tires shall be located at least 50 feet (15 240 mm) from lot lines and buildings. Tire storage piles with 500 tires or less shall be located at least 10 ft. from property lines and buildings.

Exception: Tire storage piles with 500 tires or less are permitted to be within 3 ft. of property lines and buildings for storage not exceeding 6 ft. in height.

* * *

Section 20. Chapter 35 of the 2015 International Fire Code is amended as follows:

CHAPTER 35

WELDING AND OTHER HOT WORK

SECTION 3501

GENERAL

* * *

3501.1 Scope. Welding, cutting, open torches and other hot work operations and equipment shall comply with this chapter.

Exception: Hot work on board marine vessels at dock or under construction or repair shall be in accordance with Administrative Rules 26.01.14, *Cutting, Welding and Other Hot Work on Marine Vessels* and 26.02.09 *Designated Marine Hot Work Facilities and Shipyards* and any future revisions of this rule adopted by the *fire code official.*

* * *

SECTION 3502

DEFINITIONS

THERMIT WELDING.

* * *

SECTION 3504

FIRE SAFETY REQUIREMENTS

* * *

3504.1.7 Precautions in hot work. Hot work shall not be performed on containers or equipment that contains or has contained flammable liquids, gases, or solids until the containers and equipment have been thoroughly cleaned, inerted, or purged; except that "hot tapping" shall be allowed on tanks and pipe lines when such work is to be conducted by ((~~approved~~)) qualified personnel. Hot work on flammable and combustible liquid storage tanks shall be conducted in accordance with Sections 3504 and 3510.

* * *

SECTION 3510

HOT WORK ON FLAMMABLE AND COMBUSTIBLE LIQUID STORAGE TANKS

3510.1 General. Hot work performed on the interior or exterior of tanks that hold or have held flammable or combustible liquids shall be in accordance with Section 3510.2, Section 3504, and Chapters 4, 5, 6, 7 and 10 of NFPA 326.

* * *

SECTION 3511

THERMIT WELDING

3511.1 General. Thermit Welding shall be in accordance with Sections 3511.1.1 through 3511.1.3.

3511.1.1 Mold. In Thermit welding, the mold shall be dried thoroughly before the charge is ignited and provided with a cover. The molds shall not be removed until sufficient cooling has taken place in accordance with the manufacturer's published instructions.

3511.1.2 Storage. The storage of thermit welding materials shall be in accordance the following:

1. Bulk storage of Thermit welding materials shall be maintained in a detached shed at least 15 m (50 ft) from the main buildings.

2. Storage sheds shall be maintained dry, posted as a "No Smoking" area, and kept locked.

3. Containers for the starting material shall be closed tightly immediately after each use.

3511.1.3 Smoking Restrictions. Smoking shall not be permitted in areas where Thermit welding material is being used or stored.

* * *

Section 21. Chapter 36 of the 2015 International Fire Code is amended as follows:

CHAPTER 36

MARINAS AND BOATYARDS

SECTION 3601

SCOPE

3601.1 Scope. Marinas and boatyard facilities shall be in accordance with this chapter and Seattle Building Code section 427. This chapter applies to the construction and operation of

marinas serving small recreational and commercial craft, yachts, and other craft of not more than 300 gross tons, docking facilities associated with multiple-family residences, and all associated piers, docks, and floats.

This chapter also applies to boatyard facilities and structures used for construction, repair, storage, hauling and launching, or fueling of vessels if fire on a pier would pose an immediate threat to these facilities, or if a fire at a referenced facility would pose an immediate threat to a docking facility.

Exceptions:

1. Designated marine hot work facilities and shipyards shall be in accordance with Seattle Building Code section 427 and Administrative Rule 26.02.09, Designated Hot Work Facilities and Shipyards and any future revisions of this rule adopted by the fire code official.
2. Marine Terminals shall be in accordance with Seattle Building Code section 427 and Administrative Rule 27.01.09, Marine Terminals, and any future revisions of this rule adopted by the fire code official.
3. Other waterfront structures, piers, wharves and buildings shall be in accordance with Seattle Building Code section 427.
4. Private, noncommercial docking facilities constructed or occupied for the use of the owners or residents of the associated single-family dwelling.
5. Floating homes in accordance with Seattle Residential Code.

Marinas and covered moorage in existence at the time of the adoption of this code shall be in accordance with Chapter 94.

* * *

SECTION 3602

DEFINITIONS

3602.1 Definitions. The following terms are defined in Chapter 2:

BERTH.

BOAT.

BOATYARD.

COVERED BOAT MOORAGE

DESIGNATED HOT WORK FACILITY.

FLOAT.

MARINA.

MARINE TERMINAL.

PIER.

SLIP.

((~~VESSEL.~~))

WHARF.

* * *

SECTION 3603

GENERAL PRECAUTIONS

* * *

3603.7 Signage ((~~**Slip identification**~~)). Marinas and boatyards shall be provided with conspicuous signage shall be located indicating the address of the *piers*, *wharves* and *floats* and, for those structures that are designed to support vehicles, the weight limit the structure can

support. Numbers and letters shall be easily legible and have high contrast with the color of the sign background. Numbers and letters shall not be less than 5 inches (127 mm) in height.

* * *

3603.8 Emergency Plan. Owners of piers, wharves, floats and marinas shall prepare an emergency plan for the facility. The plan shall include procedures for fire department notification and fire evacuation, and shall include the location of portable fire extinguishers and hose cabinets, sprinkler and standpipe system control valves, fire department connections and electrical disconnects.

3603.8 Point of Information

Emergency plan assistance can be found in Seattle Fire Department Client Assistance Memo 5072, located at http://www.seattle.gov/fire/FMO/firecode/cam/5072CAM%20MarinaPlans.pdf

3603.8.1 The marina or boatyard operator shall post in a prominent location or provide to boat operators using a marina or boatyard for mooring, repair, servicing, or storage, a list of safe operating procedures containing the following:

(1) Procedures for disposal of trash;

(2) Location of nonsmoking areas;

(3) Location of fire extinguishers and hoses;

(4) Procedures for turning in a fire alarm; and

(5) Fueling procedures

SECTION 3604

FIRE PROTECTION EQUIPMENT

3604.1 General. ((~~Piers, marinas and wharves~~)) Marinas and boatyards ((with facilities for mooring or servicing five or more vessels,)) and marine motor fuel-dispensing facilities shall be

equipped with fire protection ((equipment)) features in accordance with Sections 3604.2 through 3604.6.

3604.2 Standpipes. Marinas and boatyards shall be equipped throughout with ((~~standpipe systems in accordance with NFPA 303. Systems shall be provided with hose connections located such that no point on the marina pier or float system exceeds 150 feet (15 240 mm) from a standpipe hose connection.~~)) a manual Class I standpipe system in accordance with NFPA 14, or Class III standpipe system in accordance with NFPA 14, if approved by the *fire code official*, shall be provided for *piers*, *wharves* and *floats* if the hose lay distance from the fire apparatus to the most remote accessible portion of the pier, wharf or float exceeds 150 feet (45 720 mm).

Approved plastic pipe may be used if installed underwater, or if another approved method of protection from fire is provided.

The standpipe piping shall be a minimum of 4 inches (102 mm), sized to provide a minimum of 500 gpm (365 L/s) at 130 psi (896 kPa) at the most remote hose connection, with a simultaneous flow of 500 gpm (31.5 L/s) at the third most remote hose connection on the same pier while maintaining a maximum system pressure of 175 psi (1206 kPa).

3604.2.1 Hose connections. Hose connection stations on required standpipes shall be provided at the water end of the *pier*, *wharf* or *float*, and along the entire length of the *pier*, *wharf* or *float* at spacing not to exceed 150 feet (45 720 mm) and as close as practical to the land end. Each hose connection shall consist of a valved 2 ½ -inch (64 mm) fire department hose outlet. Outlet caps shall have a predrilled 1/8-inch (3.2 mm) hole for pressure relief and be secured with a short length of chain or cable to prevent falling after removal. Listed equipment shall be used.

Exception: The hose connection at the land end of the pier, wharf or float may be omitted when a hose connection is located within 150 feet (45 720 mm) of the fire apparatus access road.

3604.2.((~~1~~))2 Identification of standpipe outlets. Standpipe hose connection locations shall be clearly identified by a flag or other approved means designed to be readily visible from the pier accessing the float system.

3604.3 Access and water supply. ((~~Piers and wharves~~)) Marinas and boatyards shall be provided with fire apparatus access roads ((~~and water-supply systems with on-site fire hydrants when required by the fire code official. Such roads and water systems shall be provided and maintained in accordance with Sections 503 and 507.~~)) so located as to provide fire department apparatus access to within 50 feet (15 240 mm) travel distance to the shore end of all piers, wharves and floats. The fire apparatus access roads shall be in accordance with Section 503, Appendix D and the Seattle Right of Way Improvement Manual.

Marinas and boatyards shall be provided with at least two fire hydrants. One hydrant shall be located within 500 feet (152 400 mm) of the closest point of fire department apparatus access to the shore end of the marina *piers*, *wharves* or *floats*, or to the fire department connection (FDC) for those *piers*, *wharves* or *floats* that are equipped with standpipes. The second fire hydrant shall be located within 1000 feet (304 800 mm) of the closest point of fire department apparatus access to the shore end of the marina *piers*, *wharves* or *floats*, or to the FDC for those piers, wharves or floats that are equipped with standpipes. All required hydrants shall be capable of delivering not less than 1000 gpm (63 L/s) at a minimum residual pressure of 20 psi (138 kPa) each.

Such roads and water systems shall be maintained in accordance with Sections 503 and 507.

3604.4 Portable fire extinguishers. One portable fire extinguisher ((~~of the ordinary (moderate) hazard type~~)) having a minimum rating of 2A 20-BC, shall be provided ((~~at each required~~

~~standpipe hose connection~~)) within 75 feet (22 860 mm) of all portions of *piers*, *wharves* and *floats*. If applicable, ((~~A~~))additional fire extinguishers, suitable for the hazards involved, shall be provided. Fire extinguishers shall be maintained in accordance with Section 906 and NFPA 10.

3604.5 Communications. A telephone not requiring a coin to operate or other approved, clearly identified means to notify the fire department shall be provided on the site in a location approved by the fire code official. The street address of the marina and emergency telephone number(s) shall be displayed prominently on a sign at the telephone.

3604.6 Emergency operations staging areas. Space shall be provided on all float systems for the staging of emergency equipment. Emergency operation staging areas shall provide a minimum of 4 feet wide by 10 feet long (1219 mm by 3048 mm) clear area exclusive of walkways and shall be located at each standpipe hose connection. Emergency operation staging areas shall be provided with a curb or barrier having a minimum height of 4 inches (102 mm) and maximum space between the bottom edge and the surface of the staging area of 2 inches (51 mm) on the outboard sides of the staging area.

An approved sign reading FIRE EQUIPMENT STAGING AREA—KEEP CLEAR shall be provided at each staging area.

3604.7 Automatic sprinkler systems. Approved automatic sprinkler systems shall be installed in accordance with sections 3604.7.1 through 3604.7.4 and section 903.

3604.7.1 Covered boat moorage. Automatic sprinklers shall be provided for covered boat moorage exceeding 500 square feet in projected roof area per *pier*, *wharf* or *float*. The sprinkler system shall be designed and installed in accordance with NFPA 13 for Extra Hazard Group 2 occupancy. If sprinklers are required by this chapter for covered boat moorage, the sprinklers shall be extended to any structure on the *pier*, *wharf* or *float* exceeding 500 square feet (46.5 m^2)

in projected roof area. For the purposes of this chapter, the projected roof area means the footprint of the roof.

3604.7.2 Substructure. Automatic sprinklers shall be installed under the substructure of very new marina and boatyard facility in accordance with NFPA 307 and as specified in Chapter 9.

Exceptions:

1. Combustible substructures whose deck area does not exceed 8,000 square feet (743.2m2) supporting no superstructures.

2. Combustible substructures whose deck area does not exceed 8,000 square feet (743.2m2) supporting superstructures not required to be provided with an approved automatic sprinkler system as specified in Section 424.9.3.

3. Noncombustible substructures with or without superstructures.

4. Substructures, over other than tidal water, where sprinkler heads cannot be installed with a minimum clearance of 4 feet (1219 mm) above mean high water.

5. Substructures resulting from walkways or finger piers that do not exceed 10 feet (3048 mm) in width.

3604.7.3 Superstructure. Automatic sprinklers shall be provided in superstructures as specified in Chapter 9.

3604.8 Fire department connections. Standpipe and sprinkler systems shall be equipped with not less than a two-way 2 ½ -inch (64 mm) fire department connection (FDC), which shall be readily visible and located at the fire department apparatus access.

3604.9 Draft stops. Draft stops shall be provided under substructures in accordance with Section 427 of the Seattle Building Code.

* * *

Section 22. Chapter 50 of the 2015 International Fire Code is amended as follows:

CHAPTER 50

HAZARDOUS MATERIALS—GENERAL PROVISIONS

SECTION 5001

SCOPE

5001.1 Scope. Prevention, control and mitigation of dangerous conditions related to storage, dispensing, use and handling of hazardous materials <u>and notification of biosafety level 3 and biosafety level 4 operations</u> shall be in accordance with this chapter.

This chapter shall apply to all hazardous materials, including those materials regulated elsewhere in this code, except that when specific requirements are provided in other chapters, those specific requirements shall apply in accordance with the applicable chapter. Where a material has multiple hazards, all hazards shall be addressed.

Exceptions:

1. In retail or wholesale sales occupancies, the quantities of medicines, foodstuffs, or consumer products and cosmetics containing not more than 50 percent by volume of water-miscible liquids and with the remainder of the solutions not being flammable shall not be limited, provided such materials are packaged in individual containers not exceeding 1.3 gallons (5 L).
2. Quantities of alcoholic beverages in retail or wholesale sales occupancies shall not be limited providing the liquids are packaged in individual containers not exceeding 1.3 gallons (5 L).
3. Application and release of pesticide and agricultural products and materials intended for use in weed abatement, erosion control, soil amendment or similar applications when applied in accordance with the manufacturers' instructions and label directions.

4. The off-site transportation of hazardous materials when in accordance with Department of Transportation (DOTn) regulations.

5. Building materials not otherwise regulated by this code.

6. Refrigeration systems (see Section 606).

7. Stationary storage battery systems regulated by Section 608.

8. The display, storage, sale or use of fireworks and explosives in accordance with Chapter 56.

9. Corrosives utilized in personal and household products in the manufacturers' original consumer packaging in Group M occupancies.

10. The storage of distilled spirits and wines in wooden barrels and casks.

11. The use of wall-mounted dispensers containing alcohol-based hand rubs classified as Class I or II liquids when in accordance with Section 5705.5.

12. Hazardous materials at marine terminals in accordance with Administrative Rule 27.01.09, *Marine Terminals* and any future revisions of this rule adopted by the *fire code official.*

5001.1.1 Waiver. The provisions of this chapter are waived when the fire code official determines that such enforcement is preempted by other codes, statutes or ordinances. The details of any action granting such a waiver shall be recorded and entered in the files of the code enforcement agency.

5001.1.2 Underground storage tanks. Pursuant to Section 106.5.1, the *fire code official approves* permits to install underground tanks issued by and inspections of underground tanks conducted by the Washington State Department of Ecology.

* * *

5001.5.2 Hazardous Materials Inventory Statement (HMIS). Where required by the fire code official, an application for or renewal of a permit shall include an HMIS ((~~, such as Superfund~~

~~Amendments and Reauthorization Act of 1986 (SARA) Title III, Tier II Report or other approved statement. The HMIS shall include~~)) that includes the following information:

1. Product name.
2. Component.
3. Chemical Abstract Service (CAS) number.
4. Location where stored or used.
5. Container size.
6. Hazard classification.
7. Amount in storage.
8. Amount in use-closed systems.
9. Amount in use-open systems.

5001.5.2 Point of Information

Prior to developing a HMIS, please contact the Special Hazards Unit of the Fire Prevention Division for specific guidelines, format and assistance.

* * *

5001.7 Biosafety level 3 and biosafety level 4 operations. The *fire code official* shall be notified in writing annually of locations where biosafety level 3 (BSL-3) or biosafety level 4 (BSL-4) operations as defined by the U.S. Department of Health and Human Services Centers for Disease Control and Prevention and National Institutes of Health (CDC/NIH) are being performed. Such notification shall identify the location(s) within the building where BSL-3 and BSL-4 operations are conducted and shall certify compliance with the CDC/NIH's recommended practices for such operations.

SECTION 5002

DEFINITIONS

5002.1 Definitions. The following terms are defined in Chapter 2:

* * *

((~~MATERIAL~~)) SAFETY DATA SHEET (((~~M~~))SDS).

MAXIMUM ALLOWABLE QUANTITY PER CONTROL AREA.

NON-PRODUCTION LABORATORY FACILITY.

* * *

SECTION 5003

GENERAL REQUIREMENTS

* * *

5003.1.1 Maximum allowable quantity per control area. The maximum allowable quantity per control area shall be as specified in Tables 5003.1.1(1) through 5003.1.1(4).

For retail and wholesale storage and display in Group M occupancies and Group S storage, see Section 5003.11. Non-production laboratory facilities may be in accordance with Section 5003.13.

* * *

5003.2.2 Piping, tubing, valves and fittings. Piping, tubing, valves, and fittings conveying hazardous materials shall be designed and installed in accordance with ASME B31 or other approved standards, the Seattle Plumbing Code, and shall be in accordance with Sections 5003.2.2.1 and 5003.2.2.2.

* * *

5003.2.9.1 Equipment, devices and systems requiring testing. The following equipment, systems and devices shall be tested in accordance with Sections 5003.2.9 and 5003.2.9.2.

1. Gas detection systems, alarms and automatic emergency shutoff valves required by Section 6004.2.2.10 for highly toxic and toxic gases.
2. Limit control systems for liquid level, temperature and pressure required by Sections 5003.2.7, 5004.8 and 5005.1.4.
3. Emergency alarm systems and supervision required by Sections 5004.9 and 5005.4.4.
4. Monitoring and supervisory systems required by Sections 5004.10 and 5005.1.6.
5. Manually activated shutdown controls required by Section 6403.1.1.1 for compressed gas systems conveying pyrophoric gases.
6. <u>Gas detectors installed in repair garages for vehicles using lighter-than-air fuels required by Section 2311.7.</u>

* * *

5003.8.3 Control areas. Control areas shall comply with Sections 5003.8.3.1 through 5003.8.3.5.

5003.8.3.1 Construction requirements. Control areas shall be separated from each other by fire barriers constructed in accordance with Section 707 of the International Building Code or horizontal assemblies constructed in accordance with Section 711 of the International Building Code, or both.

5003.8.3.2 Percentage of maximum allowable quantities. The percentage of maximum allowable quantities of hazardous materials per control area allowed at each floor level within a building shall be in accordance with Table 5003.8.3.2.

Exception: *Non-production laboratory facilities* are permitted to be in accordance with Section 5003.13.

5003.8.3.3 Number. The maximum number of control areas per floor within a building shall be in accordance with Table 5003.8.3.2.

Exception: *Non-production laboratory facilities* are permitted to be in accordance with Section 5003.13.

5003.8.3.4 Fire-resistance-rating requirements. The required fire-resistance rating for fire barriers shall be in accordance with Table 5003.8.3.2 or Table 5003.13 for *non-production laboratory facilities*. The floor assembly of the control area and the construction supporting the floor of the control area shall have a fire-resistance rating of not less than 2-hours.

* * *

Table 5003.13
Design and Number of Control Areas in Non-Production Laboratory Facilities [a]

Floor Level		Percentage of the Maximum Allowable Quantity per Control Area [b]	Number of Control Areas per Floor	Fire-Resistance Rating for Fire Barriers in Hours [c,d]
Above Grade Plane	Higher than 20	Not Allowed	Not Allowed	Not Allowed
	6 - 20	15	2	2
	5	25	2	2
	4	25	2	2
	3	50	2	2
	2	75	2	1
	1	100	2	1
Below Grade Plane	1	75	2	1
	2	50	2	1
	Lower than 2	Not Allowed	Not Allowed	Not Allowed

Table 5003.13 applies to non-production laboratory facilities meeting the criteria of section 5003.13

a) Percentages shall be of the maximum allowable quantity per control area shown in Tables 5003.1.1(1) and 5003.1.1(2), with all increases allowed in the footnotes to those tables

b) Fire barriers shall include walls and floors as necessary to provide separation from other portions of the building

c) Vertical fire barriers separating control areas from other spaces on the same floor may be one hour rated.

5003.13 Non-production laboratory facilities. *Non-production laboratory facilities* are permitted to comply with Sections 5003.13.1 through 5003.13.4 in lieu of section5003.8.3.

5003.13.1 Maximum allowable quantity per control area. The aggregate amount of hazardous materials in a *control area* shall not exceed the percentage specified in Table 5003.13.

5003.13.2 Fire-resistance-rating requirements. The required fire-resistance-rating for fire barriers shall be in accordance with Table 5003.13 for non-production laboratory facilities.

5003.13.3 Storage. Storage in control areas shall be in accordance with this code and Sections 5003.13.3.1 through 5003.13.3.4.

5003.13.3.1 Density. Storage of Class I flammable liquids shall not exceed 4 gallons per 100 square feet (0.13 L/m^2) of floor area above floor level 6.

5003.13.3.2 Container size. Individual containers in storage shall not exceed 1 gallon (3.8 L) for Class I flammable liquids.

5003.13.4 Automatic sprinkler system. An approved automatic sprinkler system shall be installed throughout a building containing a non-production laboratory facility. The sprinkler system shall be designed to protect an ordinary hazard group 2 occupancy.

* * *

SECTION 5005

USE, DISPENSING AND HANDLING

* * *

5005.1.5 Legally required ((S)) standby or emergency power. Where mechanical ventilation, treatment systems, temperature control, manual alarm, detection or other electrically operated systems are required, such systems shall be provided with an emergency or *legally required* standby power system in accordance with NFPA 70 and Section 604.

5005.1.5.1 Exempt applications. *Legally required* ((S)) standby power for mechanical ventilation, treatment systems and temperature control systems shall not be required where an approved fail-safe engineered system is installed.

* * *

Section 23. Chapter 53 of the 2015 International Fire Code is amended as follows:

CHAPTER 53

COMPRESSED GASES

* * *

SECTION 5306

MEDICAL GAS SYSTEMS

[W] 5306.1 General. Compressed gases at hospitals and similar facilities intended for inhalation or sedation including, but not limited to, analgesia systems for dentistry, podiatry, veterinary and similar uses shall comply with Sections 5306.2 through 5306.4 in addition to other requirements of this chapter.

Exception: All new distribution piping, supply manifolds, connections, regulators, valves, alarms, sensors and associated equipment shall be in accordance with the Plumbing Code.

* * *

[W]5306.4 Medical gas systems. The maintenance and testing of ((~~M~~)) medical gas systems including, but not limited to, distribution piping, supply manifolds, connections, pressure regulators and relief devices and valves, shall comply with the maintenance and testing requirements of NFPA 99 and the general provisions of this chapter.

* * *

Section 24. Chapter 56 of the 2015 International Fire Code is amended as follows:

CHAPTER 56

EXPLOSIVES AND FIREWORKS

SECTION 5601 GENERAL

* * *

5601.1 Scope. The provisions of this chapter shall govern the possession, manufacture, storage, handling, sale and use of explosives, explosive materials, fireworks and small arms ammunition.

Exceptions:

1. The Armed Forces of the United States, Coast Guard or National Guard.
2. Explosives in forms prescribed by the official United States Pharmacopoeia.
3. The possession, storage and use of small arms ammunition when packaged in accordance with DOTn packaging requirements.
4. The possession, storage and use of not more than 1 pound (0.454 kg) of commercially manufactured sporting black powder, 20 pounds (9 kg) of smoke- less powder and 10,000 small arms primers for hand loading of small arms ammunition for personal consumption.
5. The use of explosive materials by federal, state and local regulatory, law enforcement and fire agencies acting in their official capacities.

6. Special industrial explosive devices which in the aggregate contain less than 50 pounds (23 kg) of explosive materials.

7. The possession, storage and use of blank industrial- power load cartridges when packaged in accordance with DOTn packaging regulations.

8. Transportation in accordance with DOTn 49 CFR Parts 100–185.

9. Items preempted by federal regulations.

10. Explosive material, fireworks, pyrotechnic special effect material and small arms ammunition located at permitted marine terminals in accordance with Administrative Rule 27.01.14, *Marine Terminals* and any future revisions of this rule adopted by the *fire code official.*

* * *

5601.1.3 Fireworks. The possession, manufacture, storage, sale, handling and use of fireworks are prohibited.

Exceptions:

1. Storage and handling of fireworks as allowed in Section 5604,

((~~2. Manufacture, assembly and testing of fireworks as allowed in Section 5605.~~))

((~~3~~))2. The use of fireworks for fireworks displays as allowed in Section 5608.

((~~4. The possession, storage, sale, handling and use of specific types of Division 1.4G fireworks where allowed by applicable laws, ordinances and regulations, provided such fireworks comply with NFPA 1124, CPSC 16 CFR, Parts 1500 and 1507, and DOTn 49 CFR, Parts 100-185, for consumer fireworks.~~))

* * *

5601.2.4 Financial responsibility. Before a permit is issued, as required by Section 5601.2, ((~~the applicant shall file with the jurisdiction a corporate surety bond in the principal sum of $100,000 or a public liability insurance policy for the same amount, for the purpose of the payment of all damages to persons or property which arise from, or are caused by, the conduct of any act authorized by the permit upon which any judicial judgment results. The fire code official is authorized to specify a greater or lesser amount when, in his or her opinion, conditions at the location of use indicate a greater or lesser amount is required. Government entities shall be exempt from this bond requirement.~~)) liability insurance in accordance with Section 105.3.9 of this code shall be obtained.

5601.2.4.1 Blasting. Before approval to do blasting is issued, the applicant for approval shall file a bond or submit a certificate of insurance in such form, amount and coverage as determined by the legal department of the jurisdiction to be adequate in each case to indemnify the jurisdiction against any and all damages arising from permitted blasting.

((~~**5601.2.4.2 Fireworks display.** The permit holder shall furnish a bond or certificate of insurance in an amount deemed adequate by the fire code official for the payment of all potential damages to a person or persons or to property by reason of the permitted display, and arising from any acts of the permit holder, the agent, employees or subcontractors.~~))

* * *

SECTION 5605

MANUFACTURE, ASSEMBLY AND TESTING OF EXPLOSIVES, EXPLOSIVE MATERIALS AND FIREWORKS

* * *

5605.1 General. The manufacture, assembly and testing of explosives, ammunition, blasting agents and fireworks is prohibited. ((~~shall comply with the requirements of this section and NFPA 495 or NFPA 1124.~~))

Exceptions:

1. The hand loading of small arms ammunition prepared for personal use and not offered for resale.
2. The mixing and loading of blasting agents at blasting sites in accordance with NFPA 495.
3. The use of binary explosives or plosophoric materials in blasting or pyrotechnic special effects applications in accordance with NFPA 495 or NFPA 1126.

((~~**5605.2 Emergency planning and preparedness.** Emergency plans, emergency drills, employee training and hazard communication shall conform to the provisions of this section and Sections 404, 405, 406 and 407.~~

~~**5605.2.1 Hazardous Materials Management Plans and Inventory Statements required.** Detailed Hazardous Materials Management Plans (HMMP) and Hazardous Materials Inventory Statements (HMIS) complying with the requirements of Section 407 shall be prepared and submitted to the local emergency planning committee, the fire code official and the local fire department.~~

~~**5605.2.2 Maintenance of plans.** A copy of the required HMMP and HMIS shall be maintained on site and fur- nished to the fire code official on request.~~

~~**5605.2.3 Employee training.** Workers who handle explosives or explosive charges or dispose of explosives shall be trained in the hazards of the materials and processes in which they are to be engaged and with the safety rules governing such materials and processes.~~

~~**5605.2.4 Emergency procedures.** Approved emergency procedures shall be formulated for each plant which will include personal instruction in any emergency that may be anticipated. All personnel shall be made aware of an emergency warning signal.~~

~~**5605.3 Intraplant separation of operating buildings.** Explosives manufacturing buildings and fireworks manufacturing buildings, including those where explosive charges are assembled, manufactured, prepared or loaded utilizing Division 1.1, 1.2, 1.3, 1.4 or 1.5 explosives, shall be separated from all other buildings, including magazines, within the confines of the manufacturing plant, at a distance not less than those shown in Table 5605.3 or 5604.5.2(3), as appropriate.~~

~~**Exception:** Fireworks manufacturing buildings separated in accordance with NFPA 1124.~~

~~The quantity of explosives in an operating building shall be the net weight of all explosives contained therein. Distances shall be based on the hazard division requiring the greatest separation, unless the aggregate explosive weight is divided by approved walls or shields designed for that purpose. When dividing a quantity of explosives into smaller stacks, a suitable barrier or adequate separation distance shall be provided to prevent propagation from one stack to another.~~

~~When distance is used as the sole means of separation within a building, such distance shall be established by testing. Testing shall demonstrate that propagation between stacks will not result. Barriers provided to protect against explosive effects shall be designed and installed in accordance with approved standards.~~

~~**5605.4 Separation of manufacturing operating buildings from inhabited buildings, public traffic routes and magazines.** When an operating building on an explosive materials plant site is designed to contain explosive materials, such a building shall be located away from inhabited~~

~~buildings, public traffic routes and magazines in accordance with Table 5604.5.2(2) or 5604.5.2(3) as appropriate, based on the maximum quantity of explosive materials permitted to be in the building at one time (see Section 5601.8).~~

~~**Exception:** Fireworks manufacturing buildings constructed and operated in accordance with NFPA 1124.~~

~~**5605.4.1 Determination of net explosive weight for operating buildings.** In addition to the requirements of Section 5601.8 to determine the net explosive weight for materials stored or used in operating buildings, quantities of explosive materials stored in magazines located at distances less than intraline distances from the operating building shall be added to the contents of the operating building to determine the net explosive weight for the operating building.~~

~~**5605.4.1.1 Indoor magazines.** The storage of explosive materials located in indoor magazines in operating buildings shall be limited to a net explosive weight not to exceed 50 pounds (23 kg).~~

~~**5605.4.1.2 Outdoor magazines with a net explosive weight less than 50 pounds.** The storage of explosive materials in outdoor magazines located at less than intraline distances from operating buildings shall be limited to a net explosive weight not to exceed 50 pounds (23 kg).~~

~~**5605.4.1.3 Outdoor magazines with a net explosive weight greater than 50 pounds.** The storage of explosive materials in outdoor magazines in quantities exceeding 50 pounds (23 kg) net explosive weight shall be limited to storage in outdoor magazines located not less than intraline distances from the operating building in accordance with Section 5604.5.2.~~

~~**5605.4.1.4 Net explosive weight of materials stored in combination indoor and outdoor magazines.** The aggregate quantity of explosive materials stored in any combination of indoor magazines or outdoor magazines located at less than the intraline distances from an operating building shall not exceed 50 pounds (23 kg).~~

~~**5605.5 Buildings and equipment.** Buildings or rooms that exceed the maximum allowable quantity per control area of explosive materials shall be operated in accordance with this section and constructed in accordance with the requirements of the International Building Code for Group H occupancies.~~

~~**Exception:** Fireworks manufacturing buildings constructed and operated in accordance with NFPA 1124.~~

~~**5605.5.1 Explosives dust.** Explosives dust shall not be exhausted to the atmosphere.~~

~~**5605.5.1.1 Wet collector.** When collecting explosives dust, a wet collector system shall be used. Wetting agents shall be compatible with the explosives. Collector systems shall be interlocked with process power supplies so that the process cannot continue without the collector systems also operating.~~

~~**5605.5.1.2 Waste disposal and maintenance.** Explosives dust shall be removed from the collection cham- ber as often as necessary to prevent overloading. The entire system shall be cleaned at a frequency that will eliminate hazardous concentrations of explosives dust in pipes, tubing and ducts.~~

~~**5605.5.2 Exhaust fans.** Squirrel cage blowers shall not be used for exhausting hazardous fumes, vapors or gases. Only nonferrous fan blades shall be used for fans located within the ductwork and through which hazardous materials are exhausted. Motors shall be located outside the duct.~~

~~**5605.5.3 Work stations.** Work stations shall be separated by distance, barrier or other approved alternatives so that fire in one station will not ignite material in another work station. Where necessary, the operator shall be protected by a personnel shield located between the operator and the explosive device or explosive material being processed. This shield and its support shall be capable of withstanding a blast from the maximum amount of explosives allowed behind it.~~

1 ~~**5605.6 Operations.** Operations involving explosives shall comply with Sections 5605.6.1~~
2 ~~through 5605.6.10.~~
3 ~~**5605.6.1 Isolation of operations.** When the type of material and processing warrants,~~
4 ~~mechanical operations involving explosives in excess of 1 pound (0.454 kg) shall be carried on at~~
5 ~~isolated stations or at intraplant distances, and machinery shall be controlled from remote~~
6 ~~locations behind barricades or at separations so that workers will be at a safe distance while~~
7 ~~machinery is operating.~~
8 ~~**5605.6.2 Static controls.** The work area where the screening, grinding, blending and other~~
9 ~~processing of static-sensitive explosives or pyrotechnic materials is done shall be provided with~~
10 ~~approved static controls.~~
11 ~~**5605.6.3 Approved containers.** Bulk explosives shall be kept in approved, nonsparking~~
12 ~~containers when not being used or processed. Explosives shall not be stored or transported in~~
13 ~~open containers.~~
14 ~~**5605.6.4 Quantity limits.** The quantity of explosives at any particular work station shall be~~
15 ~~limited to that posted on the load limit signs for the individual work station. The total quantity of~~
16 ~~explosives for multiple workstations shall not exceed that established by the intraplant distances~~
17 ~~in Table 5605.3 or 5604.5.2(3), as appropriate.~~
18 ~~**5605.6.4.1 Magazines.** Magazines used for storage in processing areas shall be in accordance~~
19 ~~with the requirements of Section 5604.5.1. All explosive materials shall be removed to~~
20 ~~appropriate storage magazines for unattended storage at the end of the work day. The contents of~~
21 ~~indoor magazines shall be added to the quantity of explosives contained at individual~~
22 ~~workstations and the total quantity of material stored, pro- cessed or used shall be utilized to~~

~~establish the intraplant separation distances indicated by Table 5605.3 or 5604.5.2(3), as appropriate.~~

~~**5605.6.5 Waste disposal.** Approved receptacles with covers shall be provided for each location for disposing of waste material and debris. These waste receptacles shall be emptied and cleaned as often as necessary but not less than once each day or at the end of each shift.~~

~~**5605.6.6 Safety rules.** General safety rules and operating instructions governing the particular operation or process conducted at that location shall be available at each location.~~

~~**5605.6.7 Personnel limits.** The number of occupants in each process building and in each magazine shall not exceed the number necessary for proper conduct of production operations.~~

~~**5605.6.8 Pyrotechnic and explosive composition quantity limits.** Not more than 500 pounds (227 kg) of pyro- technic or explosive composition, including not more than 10 pounds (5 kg) of salute powder shall be allowed at one time in any process building or area. All compositions not in current use shall be kept in covered nonferrous containers.~~

~~**Exception:** Composition that has been loaded or pressed into tubes or other containers as consumer fire- works.~~

~~**5605.6.9 Posting limits.** The maximum number of occupants and maximum weight of pyrotechnic and explosive composition permitted in each process building shall be posted in a conspicuous location in each process building or magazine.~~

~~**5605.6.10 Heat sources.** Fireworks, explosives or explosive charges in explosive materials manufacturing, assembly or testing shall not be stored near any source of heat.~~

~~**Exception:** Approved drying or curing operations.~~

~~**5605.7 Maintenance.** Maintenance and repair of explosives- manufacturing facilities and areas shall comply with Section 5604.8.~~

~~**5605.8 Explosive materials testing sites.** Detonation of explosive materials or ignition of fireworks for testing pur- poses shall be done only in isolated areas at sites where distance, protection from missiles, shrapnel or flyrock, and other safeguards provides protection against injury to personnel or damage to property.~~

~~**5605.8.1 Protective clothing and equipment.** Protective clothing and equipment shall be provided to protect persons engaged in the testing, ignition or detonation of explosive materials.~~

~~**5605.8.2 Site security.** When tests are being conducted or explosives are being detonated, only authorized persons shall be present. Areas where explosives are regularly or frequently detonated or burned shall be approved and posted with adequate warning signs. Warning devices shall be activated before burning or detonating explosives to alert persons approaching from any direction that they are approaching a danger zone.~~

~~**5605.9 Waste disposal.** Disposal of explosive materials waste from manufacturing, assembly or testing operations shall be in accordance with Section 5604.10.~~

* * *

SECTION 5608

FIREWORKS DISPLAY

* * *

5608.1 General. The sale, possession, use or discharge of fireworks and pyrotechnic special effects in the City of Seattle is prohibited except where authorized by a fire department permit or exempted under this section. ((~~Outdoor fireworks displays, use of pyrotechnics before a proximate audience and pyrotechnic special effects in motion picture, television, theatrical and group entertainment productions shall comply with Sections 5608.2 through 5608.10 and NFPA 1123 or NFPA 1126.~~))

Exceptions:

1. The use of fireworks by railroads or other transportation agencies for signaling or illumination.

2. The sale or use of blank cartridges or fireworks if *approved* by the *fire code official* for theatrics, signaling or ceremonial purposes.

3. The use of fireworks by the United States Armed Forces.

5608.2 Permit application. Prior to issuing permits for a fireworks display, plans for the fireworks display, inspections of the display site and demonstrations of the display operations shall be approved. A plan establishing procedures to follow and actions to be taken in the event that a shell fails to ignite in, or discharge from, a mortar or fails to function over the fallout area or other malfunctions shall be provided to the fire code official.

An application for a permit shall be made in writing to the *fire code official* at least 30 days in advance of the display. At the time the permit application is submitted, the *fire code official* shall be consulted regarding requirements for standby fire apparatus. No person under 18 years of age may apply for or receive a permit under this section.

* * *

5608.4.1 Display site. The radius of the display site for outdoor water or land displays shall be at least 100 foot per inch (1200 per mm) based on the internal mortar diameter of the largest aerial shell to be fired.

The designated landing areas shall be an approved large, clear, open area. Spectators, vehicles and combustible materials shall not be allowed within the designated landing area. The designated landing area shall not be within 100 feet (30 480 mm) of tents and membrane structures. The firing and storage site shall be located not less than 200 feet (60 960 mm) from a building, tent or membrane structure.

When the display is fired from a barge, such barge shall be of noncombustible construction or have a noncombustible surface.

When the display is fired from a barge or vessel, a security area shall be established around the barge to prevent boats from entering the area. No boats shall be allowed within 200 feet (60 960 mm) of the firing or storage site. A boat shall be on standby to remove personnel from the barge or water in an emergency. All personnel aboard the barge shall have approved flotation devices.

Additional water-filled fire extinguishers, rated 2-A minimum, shall be on the barge and so spaced that an extinguisher shall be available within 30 feet (9144 mm) at all times.

* * *

Section 25. Chapter 57 of the 2015 International Fire Code is amended as follows:

CHAPTER 57

FLAMMABLE AND COMBUSTIBLE LIQUIDS

SECTION 5701

GENERAL

* * *

5701.4 Permits. Permits are ((~~shall be~~)) required as set forth in Sections 105.6 and 105.7, unless a permit has been issued by the Department of Ecology to install an underground tank.

* * *

SECTION 5704

STORAGE

* * *

5704.2.7.4 Emergency venting. Stationary, above- ground tanks shall be equipped with additional venting that will relieve excessive internal pressure caused by exposure to fires. Emergency vents for Class I, II and IIIA liquids shall ((~~not discharge inside buildings~~)) terminate outside buildings in accordance with Section 5704.2.7.3.3. The venting shall be installed and maintained in accordance with Section 22.7 of NFPA 30.

* * *

5704.2.7.5.6 Location of connections that are made or broken. Filling, withdrawal and vapor-recovery connections for Class I, II and IIIA liquids which are made and broken shall be located outside of buildings, not more than 5 feet (1524 mm) above the finished ground level, in an approved location in close proximity to the parked delivery vehicle. Such location shall be away from sources of ignition and not less than 5 feet (1524 mm) away from building openings. Such connections shall be closed and liquid tight when not in use and shall be properly identified. **Exception:** Fill connections for diesel fuel tanks attached to emergency generators may be located within dedicated loading docks of buildings if installed within 10 feet (3048 mm) of the exterior opening of the loading dock and if the loading dock entrance doors have openings comprising at least 50 percent of the door area.

* * *

5704.2.9.7.3 Secondary containment. Protected above-ground tanks shall be provided with secondary containment, drainage control or diking in accordance with Section 5004.2. A means shall be provided to establish the integrity of the secondary containment in accordance with NFPA 30.

Exception: Double wall tanks where all piping connections to the tank are located above the maximum liquid level, and a means is provided to prevent the release of liquids from the tank by siphon.

* * *

5704.2.13 Abandonment and status of tanks. Tanks taken out of service shall be removed in accordance with Section 5704.2.14, or safeguarded in accordance with Sections 5704.2.13.1 through 5704.2.13.2.3 and API 1604.

Residential heating oil tanks required by this code to be removed or decommissioned shall also comply with Administrative Rule 34.02.07, *Decommissioning Residential Heating Oil Tanks* and any future revisions of this rule adopted by the *fire code official.*

* * *

5704.3.4 Quantity limits for storage. Liquid storage quantity limitations shall comply with Sections 5704.3.4.1 through 5704.3.4.4.

5704.3.4.1 Maximum allowable quantity per control area. For occupancies other than Group M wholesale and retail sales uses and Group B non-production laboratories, indoor storage of flammable and combustible liquids shall not exceed the maximum allowable quantities per control area indicated in Table 5003.1.1(1) and shall not exceed the additional limitations set forth in this section.

For Group M occupancy wholesale and retail sales uses, indoor storage of flammable and combustible liquids shall not exceed the maximum allowable quantities per control area indicated in Table 5704.3.4.1.

For Group B non-production laboratories indoor storage of flammable and combustible liquids is allowed to be in accordance with Table 5003.13 and Section 5003.13.

* * *

5704.3.4.4 Liquids for maintenance and operation of equipment. In all occupancies, quantities of flammable and combustible liquids in excess of 10 gallons (38 L) used for maintenance purposes, demonstration, treatment, and laboratory work, and the operation of equipment shall be stored in liquid storage cabinets in accordance with Section 5704.3.2. Quantities not exceeding 10 gallons (38 L) are allowed to be stored outside of a cabinet when in approved containers located in private garages or other approved locations.

* * *

SECTION 5705

DISPENSING, USE, MIXING AND HANDLING

* * *

5705.3.5.1 Maximum allowable quantity per control area. Indoor use, dispensing and mixing of flammable and combustible liquids shall not exceed the maximum allowable quantity per control area indicated in Table 5003.1.1(1) and shall not exceed the additional limitations set forth in Section 5705.3.5.

Exceptions:

1. Cleaning with Class I, II and IIIA liquids shall be in accordance with Section 5705.3.6.
2. Group B non-production laboratories in accordance with Table 5003.8.3.3 and Section 5003.13.

* * *

5705.3.7.5.3 Spill control and secondary containment. Spill control shall be provided in accordance with Section 5703.4 where Class I, II or IIIA liquids are dispensed into containers exceeding a 1.3-gallon (5 L) capacity or mixed or used in open containers or systems exceeding

a 5.3-gallon (20 L) capacity. Spill control and secondary containment shall be provided in accordance with Section 5703.4 when the capacity of an individual container exceeds 55 gallons (208 L) or the aggregate capacity of multiple containers or tanks exceeds 100 gallons (378.5 L). **Exception:** Double wall tanks where all piping connections to the tank are located above the maximum liquid level, and a means is provided to prevent the release of liquids from the tank by siphon.

* * *

Section 26. Chapter 61 of the 2015 International Fire Code is amended as follows:

CHAPTER 61

LIQUEFIED PETROLEUM GASES

SECTION 6101

GENERAL

6101.1 Scope. Storage, handling and transportation of liquefied petroleum gas (LP-gas) and the installation of LP-gas equipment pertinent to systems for such uses shall comply with this chapter, NFPA 54, and NFPA 58. Properties of LP-gases shall be determined in accordance with Appendix B of NFPA 58.

* * *

6103.1 General. LP-gas equipment shall be installed in accordance with ((~~the International Fuel Gas Code~~)) NFPA 54 and NFPA 58, except as otherwise provided in this chapter.

* * *

6103.2.1.2 Construction and temporary heating. Portable LP-gas containers are allowed to be used in buildings or areas of buildings undergoing construction as set forth in Section 3303 ((or))

for temporary heating and food service appliances in buildings in emergencies as set forth in Section((s 6.19.4, 6.19.5 and)) 6.19.8 of NFPA 58.

6103.2.1.3 Group F occupancies. In Group F occupancies, portable LP-gas containers are allowed to be used to supply quantities necessary for processing, research or experimentation. Where manifolded, the aggregate water capacity of such containers shall not exceed 735 pounds (334 kg) per manifold. Where multiple manifolds of such containers are present in the same room, each manifold shall be separated from other manifolds by a distance of not less than 20 feet (6096 mm).

6103.2.1.4 Group B, E and I occupancies. In Group E and I occupancies, portable LP-gas containers are allowed to be used for research and experimentation. Such containers shall not be used in classrooms. Such containers shall not exceed a 50-pound (23 kg) water capacity in occupancies used for educational or research purposes and shall not exceed a 12-pound (5 kg) water capacity in occupancies used for institutional purposes. Where more than one such container is present in the same room, each container shall be separated from other containers by a distance of not less than 20 feet (6096 mm).

* * *

6103.2.1.7 Use for food preparation. Where approved, listed LP-gas commercial food service appliances are allowed to be used for food-preparation within restaurants and in attended commercial food- catering operations in accordance with ((~~the International Fuel Gas Code~~)) NFPA 54, the International Mechanical Code and NFPA 58.

6103.2.1.8 Use on roofs and exterior balconies. A single LP-gas container having an individual capacity not exceeding 48 pounds (nominal 20 pound LP-gas) connected to a grill is allowed on a roof and on each exterior balcony of a building. In addition, LP-gas containers are permitted on

roofs when connected to portable outdoor gas-fired heating appliances in accordance with Section 603.4.2.

6103.2.2 Industrial vehicles and floor maintenance machines. LP-gas containers on industrial vehicles and floor maintenance machines shall comply with Sections 11.13 and 11.14 of NFPA 58.

6103.3 Location of equipment and piping. Equipment and piping shall not be installed in locations where such equipment and piping is prohibited by NFPA 54.((~~the International Fuel Gas Code.~~))

* * *

SECTION 6104

LOCATION OF LP-GAS CONTAINERS

* * *

6104.2 Fire District restrictions. Storage and use of LP-gas containers having an individual capacity in excess of 239 pounds (108.4 kg) water capacity [nominal 100 pounds (48.3 kg) LP-gas] and all stationary installations are prohibited in the Fire District.

Exception: Containers and stationary installations up to 500 gallons (1892 L) LP-gas capacity west of Alaskan Way. ((~~**Maximum capacity within established limits.** Within the limits established by law restricting the storage of liquefied petroleum gas for the protection of heavily populated or congested areas, the aggregate capacity of any one installation shall not exceed a water capacity of 2,000 gallons (7570 L) (see Section 3 of the Sample Legislation for Adoption of the International Fire Code on page xxi).~~

~~**Exception:** In particular installations, this capacity limit shall be determined by the fire code official, after consideration of special features such as topographical conditions, nature of~~

~~occupancy, and proximity to buildings, capacity of proposed LP-gas containers, degree of fire protection to be provided and capabilities of the local fire department.~~))

6104.3 Container location. LP-gas containers shall be located with respect to buildings, public ways and lot lines of adjoining property that can be built upon, in accordance with Table 6104.3.

Exception: LP-gas containers not exceeding 48 pounds (nominal 20 pound LP-gas) connected to equipment or portable heaters are allowed to be located on public ways if located a minimum of 5 feet from buildings.

* * *

SECTION 6109

STORAGE OF PORTABLE LP-GAS CONTAINERS AWAITING USE OR RESALE

* * *

6109.9 Storage within buildings accessible to the public. Department of Transportation (DOTn) specification cylinders with maximum water capacity of 2 ½ pounds (1 kg) used in completely self-contained hand torches and similar applications are allowed to be stored or displayed in a building accessible to the public. The quantity of LP-gas shall not exceed 25 pounds (11.4 kg) within the Fire District and 200 pounds (91 kg) elsewhere except as provided in Section 6109.11.

6109.10 Storage within buildings not accessible to the public. The maximum quantity allowed in one storage location in buildings not accessible to the public, such as industrial buildings, shall not exceed a water capacity of 72 pounds water capacity (nominal 30 pounds LP-gas) within the Fire District and 735 pounds (334 kg) [nominal 300 pounds (136 kg) of LP-gas] elsewhere. Where additional storage locations are required on the same floor within the same building, they

shall be separated by a minimum of 300 feet (91 440 mm). Storage beyond these limitations shall comply with Section 6109.11.

* * *

Section 27. Chapter 80 of the 2015 International Fire Code is amended as follows:

CHAPTER 80

REFERENCED STANDARDS

This chapter lists the standards that are referenced in various sections of this document. The standards are listed herein by the promulgating agency of the standard, the standard identification, the effective date and title, and the section or sections of this document that reference the standard. The application of the referenced standards shall be as specified in Section 102.7.

* * *

NFPA	National Fire Protection Association 1 Batterymarch Park Quincy, MA 02169-7471	
Standard reference number	Title	Referenced in code section number
10—13	Portable Fire Extinguishers	Table 901.6.1, 906.2, 906.3, Table 906.3(1), Table 906.3(2), 906.3.2, 906.3.4, 2106.3, I101.1
11—10	Low-, Medium- and High-expansion Foam	904.7, 3404.2.9.2.2
12—11	Carbon Dioxide Extinguishing Systems	Table 901.6.1, 904.8, 904.11
12A—09	Halon 1301 Fire Extinguishing Systems	Table 901.6.1, 904.9

Standard reference number	Title	Referenced in code section number
13—13	Installation of Sprinkler Systems	Table 903.3.1.1, 903.3.2, 903.3.5.1.1, 903.3.5.2, 904.11, 905.3.4, 907.7.3, 2301.1, 2304.2, Table 2306.2, 2306.9, 2307.2, 2307.2.1, 2308.2.2, 2308.2.2.1, 2308.4, 2310.1, 2501.1, 2804.1, 2806.5.7, 3404.3.3.9, Table 3404.3.6.3(7), 3404.3.7.5.1, 3404.3.8.4
13D—13	Installation of Sprinkler Systems in One- and Two-family Dwellings and Manufactured Homes	903.3.1.3, 903.3.5.1.1
13R—13	Installation of Sprinkler Systems in Residential Occupancies up to and Including Four Stories in Height	903.3.1.2, 903.3.5.1.1, 903.3.5.1.2, 903.4
14—13	Installation of Standpipe and Hose Systems	905.2, 905.3.4, 905.4.2, 905.6.2, 905.8
15—12	Water Spray Fixed Systems for Fire Protection	3404.2.9.2.3
16—15	Installation of Foam-water Sprinkler and Foam-water Spray Systems	904.7, 904.11
17—13	Dry Chemical Extinguishing Systems	Table 901.6.1, 904.6, 904.11
17A—13	Wet Chemical Extinguishing Systems	Table 901.6.1, 904.5, 904.11
20—13	Installation of Stationary Pumps for Fire Protection	913.1, 913.2, 913.5.1
22—13	Water Tanks for Private Fire Protection	507.2.2
24—13	Installation of Private Fire Service Mains and Their Appurtenances	507.2.1, 1909.5
25—14	Inspection, Testing and Maintenance of Water-based Fire Protection Systems	507.5.3, Table 901.6.1, 904.7.1, 912.6, 913.5, I101.1

Standard reference number	Title	Referenced in code section number
30—12	Flammable and Combustible Liquids Code	3403.6.2, 3403.6.2.1, 3404.2.7, 3404.2.7.1, 3404.2.7.2, 3404.2.7.3.6, 3404.2.7.4, 3404.2.7.6, 3404.2.7.7, 3404.2.7.8, 3404.2.7.9, 3404.2.9.3, 3404.2.9.4, 3404.2.9.6.1.1, 3404.2.9.6.1.2, 3404.2.9.6.1.3, 3404.2.9.6.1.4, 3404.2.9.6.1.5, 3404.2.9.6.2, 3404.2.9.7.4, 3404.2.10.2, 3404.2.11.4, 3404.2.11.5.2, 3404.2.12.1, 3404.3.1, 3404.3.6,Table 3404.3.6.3(1), Table 3404.3.6.3(2), Table 3404.3.6.3(3), 3404.3.7.2.3, 3404.3.8.4, 3406.8.3
30A—15	Code for Motor Fuel-dispensing Facilities and Repair Garages	2201.4, 2201.5, 2201.6, 2206.6.3, 2210.1
30B—15	Manufacture and Storage of Aerosol Products	2801.1, 2803.1, 2804.1, Table 2804.3.1, Table 2804.3.2, Table 2804.3.2.2, 2804.4.1, 2804.5.2, 2804.6, 2806.2.3, 2806.3.2, Table 2806.4, 2806.5.1, 2806.5.6, 2807.1
31—11	Installation of Oil-burning Equipment	603.1.7, 603.3.1, 603.3.3
32—11	Dry Cleaning Plants	1207.1, 1207.3
33—15	Spray Application Using Flammable or Combustible Materials	1504.3.2
34—15	Dipping and Coating Processes Using Flammable or Combustible Liquids	1505.3, 1505.4.1.1
35—11	Manufacture of Organic Coatings	2001.3, 2005.4
40—11	Storage and Handling of Cellulose Nitrate Film	306.2
51—13	Design and Installation of Oxygen-fuel Gas Systems for Welding, Cutting and Allied Processes	2601.5, 2607.1, 2609.1
51A—12	Acetylene Cylinder Charging Plants	2608.1
52—13	Vehicular Fuel System Code	3001.1
55—13	Standard for the Storage, Use and Handling of Compressed Gases and Cryogenic Fluids in Portable and Stationery Containers Cylinders and Tanks	2209.2.1, 3201.1, 3501.1, 4001.1

Standard reference number	Title	Referenced in code section number
58—14	Liquefied Petroleum Gas Code	603.4.2.1.1, 3801.1, 3803.1, 3803.2.1, 3803.2.1.2, 3803.2.1.7, 3803.2.2, 3804.1, 3804.3.1, 3804.4, 3806.2, 3806.3, 3807.2, 3808.1, 3808.2, 3809.11.2, 3811.3
59A—13	Production, Storage and Handling of Liquefied Natural Gas (LNG)	3001.1, 3201.1
61—13	Prevention of Fires and Dust Explosions in Agricultural and Food Products Facilities	Table 1304.1
69—14	Explosion Prevention Systems	911.1, 911.3, Table 1304.1
70—14	National Electrical Code	603.1.3, 603.1.7, 603.5.2, 604.2.15.1, 605.3, 605.4, 605.9, 606.16, 904.3.1, 907.1, 909.11, 909.12.1, 909.16.3, 1106.3.4, 1204.2.3, Table 1304.1, 1404.7, 1503.2.1, 1503.2.1.1, 1503.2.1.4, 1503.2.5, 1504.9.4, 1604.5, 1703.2, 1803.7.1, 1803.7.2, 1803.7.3, 1903.4, 2004.1, 2205.4, 2208.8.1.2.4, 2209.2.3, 2211.3.1, 2211.8.1.2.4, 2403.12.6.1, 2404.15.7, 2606.4, 2703.7.3, 3003.7.6, 3003.8, 3003.16.11, 3003.16.14, 3203.6, 3203.7.2, 3403.1, Table 3403.1.1, 3403.1.3, 3404.2.8.12, 3404.2.8.17, 3406.2.8, 3503.1.5, 3503.1.5.1, 3507.1.10, 3606.5.5, 3606.5.6, 3704.2.2.8
72—13	National Fire Alarm Code	508.1.5, Table 901.6.1, 903.4.1, 904.3.5, 907.2, 907.2.6, 907.2.11, 907.2.13.2, 907.3, 907.4.3, 907.4.4, 907.6.2.1.2, 907.6.2.2, 907.7, 907.7.1, 907.7.2, 907.7.5, 907.8, 907.8.1, 907.8.2, 907.9, 907.9.2, 907.9.5, I101.1, J103.1.4
80—13	Fire Doors and Other Opening Protectives	703.1.3, 1008.1.3.3
85—15	Boiler and Combustion System Hazards Code	Table 1304.1
86—15	Ovens and Furnaces	2101.1
92B—09	Smoke Management Systems in Malls, Atria and Large Spaces	909.8

Standard reference number	Title	Referenced in code section number
96 – 07	Standard for Ventilation Control and Fire Protection of Commercial Cooking Operations	609.3
99—10	Health Care Facilities	3006.4
101—12	Life Safety Code	1028.6.2
105—10	Installation of Smoke Door Assemblies and Other Opening Protectives	703.1.2
110—10	Emergency and Standby Power Systems	604.1, 604.3, 604.4, 913.5.2, 913.5.3
111—10	Stored Electrical Energy Emergency and Standby Power Systems	604.1, 604.3, 604.4
120—010	Coal Preparation Plants	Table 1304.1
130-14 as amended	Standard for Fixed Guideway Transit and Passenger Rail Systems	318
160—11	Flame Effects Before an Audience	308.3.2
170—09	Standard for Fire Safety and Emergency Symbols	1024.2.6.1
211—10	Chimneys, Fireplaces, Vents and Solid Fuel-burning Appliances	603.2
241—09	Safeguarding Construction, Alteration and Demolition Operations	1401.1
253—11	Standard Test for Critical Radiant Flux of Floor Covering Systems Using a Radiant Heat Energy Source	804.3
260—09	Methods of Tests and Classification System for Cigarette Ignition Resistance of Components of Upholstered Furniture	805.1.1.1, 805.2.1.1, 805.3.1.1, 805.4.1.1
261—09	Method of Test for Determining Resistance of Mock-up Upholstered Furniture Material Assemblies to Ignition by Smoldering Cigarettes	805.2.1.1, 805.3.1.1, 805.4.1.1
265—11	Method of Fire Tests for Evaluating Room Fire Growth Contribution of Textile Wall Coverings in Full Height Panels and Walls. 803.5.1, 803.5.1.1, 803.5.1.2, 805.4.1.1	

Standard reference number	Title	Referenced in code section number
286—11	Standard Method of Fire Tests for Evaluating Contribution of Wall and Ceiling Interior Finish to Room Fire Growth	803.1, 803.1.2, 803.1.2.1, 803.5.1
303—11	Fire Protection Standard for Marinas and Boatyards	905.3.7, 4503.5, 4503.6, 4504.2
385—07	Tank Vehicles for Flammable and Combustible Liquids	3406.5.4.5, 3406.6, 3406.6.1
407—12	Aircraft Fuel Servicing	1106.2, 1106.3
409—10	Aircraft Hangars	914.8.2, Table 914.8.2, 914.8.2.1, 914.8.5
430—10	Storage of Liquid and Solid Oxidizers	4004.1.4
484—12	Combustible Metals	Table 1304.1
490—10	Storage of Ammonium Nitrate	3301.1.5
495—10	Explosive Materials Code	911.1, 911.4, 3301.1.1, 3301.1.5, 3302.1, 3304.2, 3304.6.2, 3304.6.3, 3304.7.1, 3305.1, 3306.1, 3306.5.2.1, 3306.5.2.3, 3307.1, 3307.9, 3307.11, 3307.15
498—10	Safe Havens and Interchange Lots for Vehicles Transporting Explosives	3301.1.2
502 - 14 as amended	Standard for Road Tunnels, Bridges, and Other Limited Access Highways	319
505—10	Powered Industrial Trucks, Including Type Designations, Areas of Use, Maintenance and Operation	2703.7.3
654—11	Prevention of Fire and Dust Explosions from the Manufacturing, Processing and Handling of Combustible Particulate Solids	Table 1304.1
655—12	Prevention of Sulfur Fires and Explosions	Table 1304.1
664—012	Prevention of Fires and Explosions in Wood Processing and Woodworking Facilities	Table 1304.1, 1905.3
701—10	Methods of Fire Tests for Flame-propagation of Textiles and Films	806.2, 807.1, 807.1.2, 807.2, 807.4.2.2, 1703.5, 2404.2
703—12	Fire Retardant Impregnated Wood and Fire Retardant Coatings for Building Materials	803.4

Standard reference number	Title	Referenced in code section number
704—12	Identification of the Hazards of Materials for Emergency Response	606.7, 1802.1, 2404.2, 2703.2.2.1, 2703.2.2.2, 2703.5, 2703.10.2, 2705.1.10, 2705.2.1.1, 2705.4.4, 3203.4.1, 3404.2.3.2, F101.1, F101.2
720 – 15	Standard for the Installation of Carbon Monoxide (CO) Detection and Warning Equipment	907.2.8, 907.2.9, 907.2.10
750—10	Water Mist Fire Protection Systems	Table 901.6.1
1122—08	Model Rocketry	3301.1.4
1123—10	Fireworks Display	3302.1, 3304.2, 3308.1, 3308.2.2, 3308.5, 3308.6
1124—12	Manufacture, Transportation, Storage and Retail Sales of Fireworks and Pyrotechnic Articles	3302.1, 3304.2, 3305.1, 3305.3, 3305.4, 3305.5
1125—12	Manufacture of Model Rocket and High Power Rocket Motors	3301.1.4
1126—11	Use of Pyrotechnics Before a Proximate Audience	3304.2, 3305.1, 3308.1, 3308.2.2, 3308.4, 3308.5
1127—08	High Power Rocketry	3301.1.4
1142—12	Water Supply for Suburban and Rural Fire Fighting	B103.3
2001—11	Clean Agent Fire Extinguishing Systems	Table 901.6.1, 904.10

* * *

Section 28. A new Chapter 90 is adopted as follows:

CHAPTER 90

RESIDENTIAL OCCUPANCIES

FOUR STORIES AND OVER

Chapter 90 Point of Information

The requirements of this Chapter originated in City of Seattle Ordinance 98868, effective June 6, 1970. Ordinance 98868, also known as the Ozark ordinance, applied to all existing apartment houses, apartment hotels, and hotels four stories or more in height.

SECTION 9001

GENERAL

9001.1 Definitions. For the purpose of this chapter, the following words and terms have the meaning specified in Section 9001.1:

APARTMENT HOUSE: Any building or portion thereof, containing three or more dwelling units.

APARTMENT HOTEL: A building containing both dwelling units and guest rooms.

GUEST ROOM: Any room or rooms used or intended to be used for sleeping purposes by a person hiring such room or rooms.

HOTEL: A building in which is conducted the business of lodging the public and which contains six or more guest rooms.

9001.2 Exit Enclosure Required. All existing apartment houses, apartment hotels and hotels four stories or more in height, shall have at least two fully enclosed stairways that have a one-hour fire-resistive rating throughout. The interior corridors and egressways thereof, including all doors, transoms and other openings into corridors, shall be constructed or improved to substantially have a one-hour fire-resistive rating throughout. In buildings constructed as apartment houses in accordance with the *International Building Code* and being operated as apartment houses, walls and ceilings of plaster on wood lath or 1/2-inch plasterboard construction, and 1-3/8-inch solid core doors or equivalent is sufficient to meet the requirements of this section.

9001.3 Sprinkler Alternative. In lieu of compliance with the requirements of Section 9001.2, approved automatic fire sprinkler systems may be installed in all stairways, interior corridors and egressways of existing apartment houses, apartment hotels, and hotels four stories or more in

height. Automatic sprinkler systems, if so installed, shall also be installed in all janitor rooms, storage closets, utility rooms, and other usable spaces in which combustible materials are or may be sorted or kept, unless such rooms or spaces are equipped with self-closing fire doors having a one-hour fire-resistive rating.

SECTION 9002

CONFLICTS WITH LATER ADOPTED CODES

9002.1 Conflicts with Seattle Building and Seattle Fire Codes adopted after June 6, 1970. If conflicts exist between the requirements of this chapter and Seattle Building Codes and Seattle Fire Codes adopted after June 6, 1970, the provisions of the later adopted codes apply.

* * *

Section 29. A new Chapter 91 is adopted as follows:

CHAPTER 91

AUTOMATIC SPRINKLER SYSTEMS

IN NURSING HOMES

Point of Information

The requirements of this Chapter originated in City of Seattle Ordinance 94931, effective August 5, 1966.

SECTION 9101

SCOPE

9101.1 Nursing Home Defined. For the purpose of this chapter, the term "nursing home" means any home, place, or institution that operates or maintains facilities providing convalescent or chronic care, or both, for a period in excess of 24 consecutive hours for three or more patients not related by blood or marriage to the operator, who by reason of illness or infirmity, are unable

properly to care for themselves. Convalescent and chronic care may include, but is not limited to any or all procedures commonly employed in waiting on the sick such as administration of medicines, preparation of dressings and bandages, and carrying out of treatment prescribed by a duly licensed practitioner of the healing arts. It may also include care of mentally incompetent persons if they do not require psychiatric treatment by or under the supervision of a physician specialized in the field of medicine. Nothing in this definition shall be construed to include general hospitals or other places that provide care and treatment for the acutely ill and maintain and operate facilities for major surgery or obstetrics, or both. Nothing in this definition shall be construed to include any boarding home, guest home, hotel or related institution that is held forth to the public as providing, and that is operated to give only board, room and laundry to persons not in need of medical or nursing treatment or supervision, except in the case of temporary acute illness. The mere designation by the operator of any place or institution, which does not provide care for the acutely ill or maintain and operate facilities for major surgery or obstetrics, as a hospital, sanitarium, or similar name shall not exclude such place or institution from the provisions of Section 9102.

SECTION 9102

INSTALLATION OF EQUIPMENT

9102.1 Installation Exceptions. Approved automatic fire sprinkler systems shall be installed in all usable rooms, corridors, and stairways of existing nursing homes with the following exceptions:

1. Nursing homes that are of Type I or II construction throughout, as defined in the *International Building Code*.

2. Nursing homes not more than one story in height which have interiors with a one-hour fire resistance rating throughout.

SECTION 9103

CONFLICTS WITH LATER ADOPTED CODES

Section 9103.1. Conflicts with Seattle Building and Seattle Fire Codes adopted after August 5, 1966. If conflicts exist between the requirements of this chapter and Seattle Building Codes and Seattle Fire Codes adopted after August 5, 1966, the provisions of the later adopted code apply if they are not less stringent.

* * *

Section 30. A new Chapter 92 is adopted as follows:

CHAPTER 92

AUTOMATIC SPRINKLER SYSTEMS IN SCHOOLS

Chapter 92 Point of Information

The requirements of this Chapter originated in City of Seattle Ordinance 94931, effective August 5, 1966.

SECTION 9201

GENERAL

9201.1 School Buildings Defined. For the purpose of this chapter, the term "school building," means:

1. A public place of instruction operated by public authorities, including elementary and secondary schools.

2. A place of instruction operated by private persons or private or religious organizations in which the course of study is similar to that in a public school, and which has been authorized by the State as an educational institution.

SECTION 9202

INSTALLATION OF EQUIPMENT

9202.1 Installation Exceptions. An approved automatic fire sprinkler system shall be installed in all usable rooms, corridors and stairways of existing school buildings, two stories or more in height, with the following exceptions:

1. School buildings that are of Type I or II construction as defined in the Building Code.

2. School buildings not over three stories in height that have interiors with one-hour fire resistance rating throughout, and that have egress enclosures with a one-hour fire resistance rating.

3. School buildings, not over three stories in height, with interiors that substantially have a one-hour fire resistance rating, need only have egress corridors, stairways, janitor rooms, storage rooms and similar spaces equipped with approved automatic sprinkler systems. Classrooms and assembly rooms in such buildings need not be so equipped.

SECTION 9203

CONFLICTS WITH LATER ADOPTED CODES

9203.1 Conflicts with Seattle Building and Seattle Fire Codes adopted after August 5, 1966. If conflicts exist between the requirements of this chapter and Seattle Building Codes and Seattle Fire Codes adopted after August 5, 1966, the provisions of the later adopted code apply.

* * *

Section 31. A new Chapter 93 is adopted as follows:

CHAPTER 93

MINIMUM STANDARDS FOR HIGH-RISE BUILDINGS

Chapter 93 Point of Information

The requirements of this Chapter originated in City of Seattle Ordinance 110299, effective January 23, 1982. Where used in this Chapter, the term "Building Code" shall mean the 1982 Seattle Building Code. Where used in this Chapter, the terms "this Code" and "the fire code" shall mean the 1982 Seattle Fire Code.

SECTION 9301

GENERAL

9301.1 Purpose. The main purpose of this chapter is to improve the fire and life safety of existing high-rise buildings that do not conform to current City codes so that the health, safety and welfare of the general public is provided for and promoted. It is recognized that the application of present day fire protection techniques to some existing high-rise buildings is difficult. For this reason, this chapter may permit the use of alternative methods and innovative approaches and techniques to achieve its purpose, if *approved* by the *fire code official* and the Building Official.

9301.2 Scope. This chapter applies to all high-rise buildings in existence at the time of its adoption, as well as to all high-rise buildings coming into existence after the adoption thereof.

9301.2.1 Hazards and design features. If the *fire code official* finds a condition in a high-rise building not specifically addressed in this chapter, which in the *fire code official*'s opinion makes fire escape or fire fighting unusually difficult, the *fire code official* is authorized to declare it to

be a hazard, notify the owner of such condition and order its correction in a manner consistent with these minimum safeguards.

9301.2.2 Exempt Buildings. The *fire code official* and the Director of the Seattle Department of Construction and Inspections may exempt high-rise buildings that meet the requirements of Section 403 of the 1982 *Seattle Building Code* from complying with the provisions of this chapter.

9301.2.3 Conflicts. If there is a conflict between the provisions of this chapter and the provisions of an ordinance or code adopted after January 23, 1982, the provisions of the later adopted ordinance or code apply.

9301.3 Definitions. For the purpose of this chapter, certain words shall be construed as specified in this section.

CENTRAL STATION: A fire alarm reporting service listed by the Underwriters Laboratories or authorized by the *fire code official* to report alarms to the Seattle Fire Department Alarm Center. In lieu of connection to a central station listed by Underwriters Laboratories, the *fire code official* may approve building staff monitoring of a fire alarm annunciator panel if:

1. Such staff are properly trained to monitor the annunciator panel and report alarm signals to the fire department alarm center via the 9-1-1 system.
2. One or more building staff is on duty 24 hours a day and remains in the direct vicinity of the annunciator panel, e.g., a hotel desk clerk if the panel is behind the registration desk.
3. Staff persons are available in low income high-rise buildings whose primary duty requires them to be at the front desk.

DEAD-END CORRIDOR: A corridor that permits only one direction of travel from a unit or normally occupied room door to an exit, or that intersects an exit corridor on one end and does

not provide an exit path on the other end. A corridor that has fire escapes directly accessible from it is not a dead-end corridor.

FLOOR USED FOR HUMAN OCCUPANCY: A floor designed and intended for occupancy by one or more persons for any part of a day, including a roof garden and an active storage area. An area that is permanently unoccupied or is occupied for the service of building equipment only is not included in this definition.

HIGH-RISE BUILDING: Buildings having floors used for human occupancy located more than 75 feet above the lowest level of fire department vehicle access.

LOW INCOME RESIDENTIAL BUILDINGS: Those buildings that meet the following requirements:

1. At least 50 percent of the dwelling or housing units as defined in the Seattle Housing and Building Maintenance Code (Seattle Municipal Code Ch. 22.204) are rented to non-transient persons at a rent at or below .9% of the current median income for all families in the Seattle area as determined by the United States Department of Housing and Urban Development; and

2. The average monthly rent for all dwelling or housing units in the building does not exceed 1.4% of the Median Income Limit.

For purposes of calculating the average monthly rent, a room that is rented on a hostel-style basis to three or more non-related persons is considered as one room rented for $200 per month.

Monthly rent includes all charges for shelter and provision of items normally associated with such use, but does not include board, health care, telephone charges and other such items.

SECTION 9302

EXITS

9302.1 General. All exits in high-rise buildings shall be illuminated as required in Section 1211 of this Code and enclosed with a minimum of one-hour fire resistive construction. Every high-rise building shall have at least one such exit. If existing exterior fire escapes are used for additional exits, they shall be tested and identified as required in Section 9302.3.

9302.2 Smokeproof enclosure. Where a high-rise building has a single, enclosed exit, the enclosure shall be continued to the exterior of the building, the exit shall be smoke-proof by mechanical ventilation in accordance with Section 3310 of the 1982 *Seattle Building Code*, or mechanically pressurized with fresh air to 0.15 inches water column and shall have a concurrent 2500 cubic feet per minute (CFM) exhaust to atmosphere in an emergency, in accordance with the provisions of the Building Code.

Exceptions:

1. Pressurization may be omitted if the building has an *approved* automatic sprinkler system, all corridor openings are self-closing, all occupied areas have access to a second means of egress or a fire escape and the omission is *approved* by the *fire code official.*
2. A single stair may exit through a building lobby, if the lobby is of non-combustible construction, does not contain combustible furnishings, and is separated from the rest of the building by one-hour fire-resistive construction. Wire-glass protected by sprinklers on both sides may be accepted as one-hour fire-resistive construction. If the lobby contains no combustible materials, wire-glass need only be protected by sprinklers on the side opposite the lobby.

9302.3 Fire Escapes. Exterior fire escapes shall be accessible and structurally safe at all times. Owners of high-rise buildings shall load test fire escapes at least once every five years with a weight of not less than 100 lb/sq. foot. The results of such a load test shall be submitted in writing to the *fire code official*. In lieu of such a test, the *fire code official* may accept the opinion of a structural engineer licensed by the State of Washington describing his inspection and/or tests and stating that the fire escape is structurally safe and will support a load of 100 lb/sq. foot. There shall be signs *approved* by the *fire code official* clearly identifying the route of access to the fire escape from every public corridor. Fire escapes that are not maintained structurally safe and not otherwise required by provisions of the Fire Code shall be removed. Locked doors or windows are prohibited between public corridors and fire escapes.

Exceptions: If all of the following criteria are met and *approved* by the *fire code official*:

1. An identified tool or device for opening the locked door or window is permanently affixed in close proximity to the locked point.
2. The area around the locked door or window is served by emergency illumination.
3. Clearly understandable directions indicating the use of the tool and the route to the fire escape are posted at the locked door or window.

9302.4 Doors. All exit doors in the path of exit travel shall be self-closing or automatic closing in accordance with Section 713.6 of the 1982 Building Code. Doors held open by fusible links, and sliding or vertical doors are prohibited in exit-ways. Stairway doors shall be self-latching.

9302.5 Unlocking of doors. Stairway doors, including the doors between any stairway and the roof, shall not have locks or shall unlock automatically whenever a fire alarm is activated in the high-rise building. Such locks shall unlock automatically when power is off (fail safe). If the

only locked door in a stair shaft is the one that leads to the roof, it may be locked by panic hardware or *approved* alarm lock-paddle bars.

9302.6 Egress from stairways. Enclosed stairways serving more than six floors shall have two means of egress from the stairway. Enclosed stairways serving ten or more floors shall have re-entry into the building at approximately 5-story intervals. Re-entry signs shall be posted in the stair.

Exceptions:

1. Jails.
2. If telephones connected to a 24-hour manned location are provided in the stairway in each 5-floor increment that does not have a means of egress.
3. If any door serving as an entrance to the stair does not automatically lock behind a person entering the stair.
4. If alternate means of alerting building management to persons trapped in a stairwell are *approved* by the Building Official.

SECTION 9303

DEAD-END CORRIDORS

9303.1 Dead-end corridors. Dead-end corridors are limited to 75 feet in length in office occupancies and 30 feet in length in all other occupancies. If such limits are exceeded, automatic sprinkler protection meeting the requirements of the Fire Code and the Building Code shall be provided for the entire dead-end corridor, with one head on the room side of each door opening onto the corridor. Domestic water systems may be used to supply such sprinklers when *approved* by the *fire code official*.

Exceptions:

1. In high-rise buildings, inactive doors leading from the dead-end corridor into spaces that are not in normal use may be covered with 5/8((")))inch type "x" gypsum board or its equivalent, in lieu of installing a sprinkler head over the door or smoke detector in the room.
2. In office occupancies, sprinkler heads on the room side of each door opening onto the corridor need not be installed.
3. In residential buildings, if corridors and each guest room are equipped with electrically supervised heat detectors connected to the building fire alarm system, sprinkler heads, or any combination thereof. If heat detectors are used in rooms in lieu of sprinklers, doors must be rated at 20 minutes and must be self-closing.
4. In office occupancies, sprinkler systems are not required in a dead-end corridor if the corridor is equipped with smoke detectors and each room opening onto the corridor is equipped with at least one smoke detector. Such detector shall be electrically supervised and connected to the building fire alarm system.
5. If there is a fire escape not directly accessible from the corridor and the exit route is protected by electrically supervised smoke detection.
6. Corridors within residential units are exempt.
7. Corridors within private offices may have corridor only smoke detection connected to the building alarm systems.

SECTION 9304

FIRE RESISTIVE CONSTRUCTION

9304.1 Fire separation. Any space larger than 1,500 square feet shall be separated from building stair shafts, elevator shafts and air handling shafts by non-combustible smoke resistive separation

(glass walls with wood stops are acceptable) and equipped with smoke detectors connected to the building fire alarm system.

Exceptions:

1. Spaces that have *approved* automatic sprinkler systems.

2. Building lobbies or corridors which are equipped with an *approved* smoke control system that includes shaft pressurization and automatic smoke removal.

3. Building lobbies or corridors of any size that do not contain combustible furnishings (other than carpet) or commercial spaces and have non-combustible interior finish throughout.

NOTE: To qualify for exception 3, all spaces adjacent to the building lobby must be separated and equipped with smoke detectors as outlined in this section, and all doors leading into the lobby must be self-closing or automatically closing upon activation of the building fire alarm system.

4. Office areas above the main lobby, including open space design areas.

NOTE: This exception does not apply to retail or wholesale stores, display rooms, restaurants, cocktail lounges and bars, banquet rooms, meeting rooms, storage rooms and spaces that, because of unusual fuel load or other conditions, pose an unusual hazard in the opinion of the *fire code official*.

5. Smoke detectors are not required in spaces that are separated by one-hour fire-resistive construction, with openings protected by one-hour self-closing doors.

Domestic water systems may be used to supply the sprinkler system referred to in this section if *approved* by the *fire code official*.

9304.2 Shaft enclosures. All openings that connect three or more floors shall be enclosed with a minimum of one-hour fire resistive construction.

Exception: Openings complying with Sections 304.6 or 402 of the 1982 Seattle Building Code.

SECTION 9305

HEATING, VENTILATION AND AIR CONDITIONING SYSTEM (HVAC) SHUTDOWN

9305.1 Air moving systems. Air moving systems that serve more than the floor on which they are located shall automatically shut down on any high-rise building fire alarm, or shall be provided with a manual shutdown switch located at the fire alarm panel in the main building lobby.

Exception: Air moving systems of:

1. Less than 2,000 CFM.
2. Exhaust only systems of less than 15,000 CFM, such as toilet, range hood, kitchen, fume hood, etc.
3. HVAC systems of less than 15,000 CFM with automatic shut-down on smoke detectors in the area served, which are connected to the building fire alarm system.
4. Life safety pressurization systems as provided in the Building Code.
5. Buildings with *approved* automatic smoke control pursuant to Section 1807 of the 1982 edition of the Seattle Building Code.

SECTION 9306

FIRE ALARM AND DETECTION SYSTEMS

9306.1 General. Every high-rise building, except a residential occupancy with a system installed under Ordinance 106107 as now or hereafter amended, shall have an electrically supervised fire alarm and detection system *approved* by the *fire code official*, as follows:

A manual pull station shall be located at every floor exit door, except in office occupancies.

The alarm system for the high-rise building shall be monitored by a central station, or other such means *approved* by the *fire code official*.

The alarm systems shall be electrically supervised and have battery emergency power sufficient to operate for a period of 24 hours and sound the alarm for 10 minutes at the end of that period.

9306.2 Automatic smoke detection. There shall be electrically supervised automatic smoke detection in elevator landings, public corridors, and on the corridor or floor side of each exit stairway.

Exception: If a corridor has an *approved* automatic sprinkler system, smoke detectors may be omitted from the corridor.

There shall be electrically supervised automatic smoke detectors within 50 feet of building perimeter walls and at standard spacing (approximately 30 feet) to the center of the floor.

Exceptions:

1. Interior of residential units.
2. Floors that have an *approved* automatic sprinkler system.
3. Parking garages.
4. Building Mechanical Spaces.
5. Any space above the top occupied floor.

9306.3 Rooms without sprinklers. There shall be electrically supervised automatic heat or smoke detection in rooms used for storage, shops, handicraft, janitor, trash and similar purposes where the fuel load may be significantly higher than the average floor fuel load and no automatic sprinkler system exists.

Exceptions:

1. Rooms with an *approved* automatic sprinkler system.
2. Rooms under 10 square feet opening onto exit corridors.
3. Rooms under 100 square feet not opening onto exit corridors.
4. Rooms within residential units.
5. Rooms where the storage is in closed metal containers.
6. Rooms other than those opening onto a corridor and within 30 ft. of an electrically supervised automatic smoke detector.

9306.4 Audibility. Alarm systems shall have audible devices producing a slow "whoop" sound audible at 15 dBA above ambient sound levels with a minimum of 60 dBA throughout residential occupancies and 10 dBA above ambient sound levels with a minimum of 55 dBA throughout other occupancies, and shall have a microphone capable of making voice announcements simultaneously to all floors.

The alarm shall sound at a minimum on the floor where the fire is occurring and the floor above, and the alarm system shall be capable of sounding a general alarm throughout the high rise building. The alarm system shall be designed so that a general alarm may be activated from two separate locations.

9306.4.1 Zones. Fire alarm systems shall be zoned per floor.

9306.4.2 Panels. There shall be an annunciator panel in the main lobby of a high rise building or in such other areas *approved* by the *fire code official* as an emergency control center.

9306.5 Automatic sprinklers. If an automatic sprinkler system has been installed for fire protection, the water flow alarm shall be connected to the building fire alarm.

Exception: Where automatic smoke detectors are installed in the area and zoned, a single water flow alarm may be used.

9306.6 Elevator shafts. For purposes of Section 9306, wiring for fire alarm and fire detection systems may be installed in elevator shafts, if:

1. Such wiring shall not interfere with the safe operation of the elevator.
2. Such wiring shall be enclosed within metal conduit and all junction boxes shall be located outside the shaft.
3. All wiring work shall be done under applicable permit obtained from the Seattle Department of Construction and Inspections.

9306.7 Elevator recall. A fire alarm originating on a floor other than the main lobby floor shall cause all elevators to be returned to the main floor in accordance with Chapter 30 of the 1982 *Seattle Building Code*. Whenever new elevator controllers are installed, they shall meet provisions of the current *Seattle Building* and *Elevator Codes*. Newly installed controllers shall have the capability of selecting alternate recall floors.

Exception: Freight elevators with manually operated doors.

SECTION 9307

EMERGENCY POWER

9307.1 General. High-rise buildings not meeting the Building Code in effect at the time of the original adoption of this article shall have, as a minimum, emergency power as follows:

1. Stairway pressurization emergency power shall be provided by an on-site diesel engine generator set. Such power shall start automatically on fire alarm and the generator set shall have a two-hour fuel supply.

2. Exit signs and pathway illumination shall have emergency power by trickle charged storage batteries. Such batteries shall have a capacity to provide required illumination for 90 minutes.

3. Fire alarm emergency power shall be provided as required in Section 9306.

SECTION 9308

SIGN REQUIREMENTS

9308.1 General. All signs in this section shall be *approved* by the *fire code official* and have graphic symbols if possible. In hotels, signs must have graphic symbols. Sign lettering shall follow Appendix I-C of the 1982 *Seattle Fire Code.*

A sign shall be posted on the room side of every hotel guest room indicating the relationship of that room to the exits and fire extinguishers, and giving basic information on what to do in the event of fire in the building.

9308.2 Stairs. Signs shall be provided on the stairway side of every stair door indicating the number of the stair, the floor that the door serves, the high-rise building re-entry points, and stair termination.

9308.3 Elevators. A sign shall be posted in every elevator lobby above each call switch noting that the elevators will be recalled to the building lobby on fire alarm. This sign shall warn persons not to use the elevator in the event of fire and direct them to use the stairway.

If exit signs are not clearly visible from the elevator lobby, signs shall be installed to indicate the direction to stair and fire escape exits.

9308.4 Emergency illumination. Emergency illumination shall be provided at the elevator lobby sign location.

9308.5 Exit identification. "NOT AN EXIT" signs shall be installed at all doorways, passageways, or stairways that are not exits, exit accesses or exit discharges, and that may be

mistaken for an exit. A sign indicating the use of the doorway, passageway, or stairway, such as "to basement," "storeroom," or "linen closet," is permitted in lieu of the "NOT AN EXIT" sign.

SECTION 9309

EMERGENCY PREPAREDNESS

9309.1 Emergency plan. Owners of high-rise buildings shall prepare an emergency operations plan in accordance with Section 403 of the 1982 Seattle Building Code. In addition to the requirements of Section 403 of the 1982 Seattle Building Code, the emergency operations plan shall specify the duties during a fire emergency of the building management and staff, the building fire safety directors and floor wardens as identified in Section 9309.2.

9309.2 Building staff training. Owners of high-rise buildings shall designate from existing staff a building fire safety director who shall be responsible for the operation of the building fire protection equipment. Owners of high-rise buildings and/or tenants employing over 100 persons shall designate a floor warden for each floor to be responsible for evacuating the people on their respective floors in emergencies. The names and work locations of the director and the floor wardens shall be maintained on a roster contained in the building emergency operations plan.

Exceptions:

1. Residential condominiums and apartment occupancies not employing staff.
2. Office and retail occupancies after normal business hours.

NOTE: In residential buildings employing staff, if there are not enough staff to appoint a floor warden for each floor, wardens shall be appointed to the fire floor, the floor above and as many additional floors as possible. In buildings where only one staff person is available, that person will be the Fire Safety Director.

9309.3 Fire drills. The staff of high-rise buildings shall conduct, and the occupants thereof shall participate in, fire drills on a regular basis as established in Chapter 4 of the 2009 Seattle Fire Code.

* * *

Section 32. A new Chapter 94 is adopted as follows:

CHAPTER 94

FIRE PROTECTION FOR COVERED BOAT MOORAGE

Chapter 94 Point of Information

The requirements of this chapter originated in City of Seattle Ordinance 121773, effective May 18, 2005. The requirements of this ordinance apply to all covered moorage marina facilities inexistence on the effective date of May 18, 2005.

SECTION 9401

GENERAL

9401.1 Scope. This chapter applies to covered portions of all marinas with covered boat moorage in existence at the time of its adoption.

Exceptions:

1. *Approved* designated facilities and shipyards in accordance with Administrative Rule 26.02.04, *Designated Hot Work Facilities and Shipyards*.
2. Boathouses.

9401.2 Intent. This Chapter is intended to promote the health, safety and welfare of life and property from fire at covered boat moorage.

9401.3 Modifications. The retroactive requirements of this chapter may be modified if their application clearly would be impractical for economic or physical reasons in the judgment of

the *fire code official*, and only if it is clearly evident that a reasonable degree of safety is provided.

9401.4 Signage. Conspicuous signage shall be located at the fire apparatus access road termination point and the shore end of piers, wharves and floats. Signage shall indicate the address, directions and maps if required by the *fire code official*. For those structures that are designed to support vehicles, signage shall indicate the weight limit. Numbers and letters shall be easily legible and have high contrast with the color of the sign background. Numbers and letters shall not be less than 5 inches (127 mm) in height and shall have a minimum stroke of 0.5 inches (12.7 mm).

9401.5 Smoking Restrictions. Smoking is prohibited in all areas where fuels and other flammable and combustible liquids and gases are stored or dispensed, in battery rooms, and in other such locations as management or the *fire code official* designate. "No Smoking" signs shall be conspicuously posted.

9401.6 Transmittal of Fire Emergency. All marinas and boatyards shall have a means to notify the fire department rapidly in the event of an emergency. If a telephone is used for this purpose, it shall be available for use at all times and shall not require the use of a coin. The street address of the facility and the emergency telephone number(s) shall be displayed prominently on a sign at the telephone.

9401.7 Labeling electrical shutoffs. Electrical transformers, control panels, and breaker panels shall be readily accessible, clearly labeled and indicate the areas they service. See also SFC 605.3.

9401.8 Fire extinguishers. One portable fire extinguisher having a minimum rating of 2A 20-BC shall be provided within 75 feet (22,860 mm) of all portions of piers, wharves, and floats, or

at each required hose station. Additional fire extinguishers, suitable for the hazards involved, shall be provided and maintained in accordance with SFC 906 and NFPA Standard 10.

SECTION 9402

DEFINITIONS

9402.1 Definitions. The following words and terms shall, for the purposes of this chapter, have the meanings shown here.

BERTH is the water space to be occupied by a boat or other vessel alongside or between bulkheads, piers, piles, fixed and floating docks, or any similar access structure. (See also definition for Slip.)

BOATHOUSE is an independently floating structure designed to be moored to a main float system to enclose and protect a vessel or vessels. A boathouse is capable of being moved on water, but is typically moored to a float system for long periods of time.

COVERED BOAT MOORAGE is a pier or system of floating or fixed accessways to which vessels on water may be secured and is covered by a roof.

DRAFT CURTAIN. A structure arranged to limit the spread of smoke and heat along the underside of the ceiling or roof.

FIRE PARTITION is a vertical assembly of materials designed to restrict the spread of fire in which openings are protected.

FLOAT is a floating structure normally used as a point of transfer for passengers and goods, or both, for mooring purposes.

GRAVITY-OPERATED DROP OUT VENTS. Automatic smoke and heat vents containing heat-sensitive glazing designed to shrink and drop out of the vent opening when exposed to fire.

MARINA is any portion of the ocean or inland water, either naturally or artificially protected, for the mooring, servicing, or safety of vessels and includes artificially protected works, the public or private lands ashore, and structures or facilities provided within the enclosed body of water and ashore for the mooring or servicing of vessels or the servicing of their crews or passengers.

MARINE MOTOR FUEL-DISPENSING FACILITY. That portion of property where flammable or combustible liquids or gases used as fuel for watercraft are stored and dispensed from fixed equipment on shore, piers, wharves, floats, or barges into the fuel tanks of watercraft and includes all other facilities used in connection therewith.

PIER is a structure, usually of greater length than width, of timber, stone, concrete or other material, having a deck and projecting from the shore into waters so that vessels may be moored alongside for loading, unloading, storage, repairs or commercial uses.

SLIP is a berthing space between or adjacent to piers, wharves, or docks; the water areas associated with boat moorage. (See also definition for Berth.)

WHARF OR QUAY is a structure of timber, stone, concrete or other material having a platform built along and parallel to waters so that vessels may be moored alongside for loading, unloading, storage, repairs or commercial uses.

SECTION 9403

PLANS AND APPROVALS

9403.1 Plans. Plans for marina fire-protection shall be *approved* prior to installation. The work shall be subject to final inspection and approval after installation.

SECTION 9404

ACCESS AND WATER SUPPLY

9404.1 Fire apparatus access roads. Fire apparatus access roads shall be provided and so located as to provide fire department apparatus access to within 150 feet (45,720 mm) travel distance to the shore end of all marina piers, wharves, and floats. Fire apparatus access roads shall be in accordance with Appendix D of the 2003 Seattle Fire Code.

Exception: If *approved* by the *fire code official*, a Class I standpipe system may be installed on piers, wharves, or floats if conditions are such that providing fire department access lanes to within 150 feet (45,720 mm) to the shore end of the piers, wharves, and floats is not practical. Additional standpipe requirements are found in SFC 9405.1.

9404.2 Premises access. The fire department shall have access to fenced, gated, or locked grounds, piers, wharves or floats. Appropriate means of access (including keys and cardkeys) shall be provided in an *approved* secured lock box (Knox Box) on the premises in an *approved* location. The fire department shall be notified immediately of any changes in the means of access.

9404.3 Fire hydrants. At least two fire hydrants shall be provided. One hydrant shall be located within 500 feet (152,400 mm) of the closest point of fire department apparatus access to the shore end of the marina piers, wharves or floats, or to the fire department connection (FDC) for those piers, wharves or floats that are equipped with standpipes. The second fire hydrant shall be located within 1000 feet (304,800 mm) of the closest point of fire department apparatus access to the shore end of the marina piers, wharves, or floats, or to the FDC for those piers, wharves or floats that are equipped with standpipes.

Exception: The requirements for fire hydrants may be modified if alternate arrangements are *approved* by the *fire code official*.

9404.4 Water supply. All required hydrants shall be capable of delivering not less than 1,000 gpm at a minimum residual pressure of 20 psi each.

Exception: The requirements for water supply may be modified if alternate arrangements are *approved* by the *fire code official*.

SECTION 9405

FIRE PROTECTION EQUIPMENT

9405.1 Standpipe systems. A manual Class I standpipe system (or class III standpipe system if *approved* by the *fire code official*) in accordance with NFPA Standard 14 shall be provided for piers, wharves, and floats if the hose lay distance from the fire apparatus to the most remote accessible portion of the pier, wharf, or float exceeds 150 feet (45,720 mm). *Approved* plastic pipe may be used if installed underwater, or other *approved* method of protection from fire is provided. The standpipe piping shall be a minimum of 4 inches (102 mm), sized to provide a minimum of 500 gpm at 130 psi at the most remote hose connection, with a simultaneous flow of 500 gpm at the third most remote hose connection on the same pier while maintaining a maximum system pressure of 175 psi. Existing standpipe systems providing equivalent performance to the specification listed above may be acceptable if *approved* by the *fire code official*.

9405.1.1 Hose connections. Hose connections on required standpipes shall be provided at the water end of the pier, wharf, or float, and along the entire length of the pier, wharf, or float at spacing not to exceed 150 feet (45,720 mm) and as close as practical to the land end.

Exception: The hose connection at the land end of the pier, wharf or float may be omitted if a hose connection is located within 150 feet (45,720 mm) of the fire apparatus access road. Each hose connection shall consist of a valved 21/2-inch (64 mm) fire department hose outlet. Outlet caps shall have a predrilled 1/8-inch (3.2 mm) hole for pressure relief and be secured with a short length of chain or cable to prevent falling after removal. Listed equipment shall be used.

9405.2 Automatic sprinkler systems. Automatic sprinklers shall be provided for each separate covered boat moorage area exceeding 8,000 sq. ft. (743 m2) in projected roof area, excluding roof overhangs. A separate covered boat moorage area is one that has at least 16 feet uncovered horizontal separation from any part of any adjacent covered boat moorage area.

The sprinkler system shall be designed and installed in accordance with NFPA Standard 13 for Extra Hazard Group 2 occupancy.

Exception: Covered boat moorage already protected by an automatic sprinkler system is not required to be upgraded to Extra Hazard Group 2 criteria.

9405.2.1 Monitoring. Sprinkler systems shall be monitored by an *approved* central station.

9405.3 Smoke and heat vents: *Approved* automatic smoke and heat vents shall be provided in covered boat moorage areas exceeding 2,500 sq. ft. (232 m2) in area, excluding roof overhangs.

Exception: Smoke and heat vents are not required in areas protected by automatic sprinklers.

9405.3.1 Design and installation. If smoke and heat vents are required they shall be installed near the roof peak, evenly distributed and arranged so that at least one vent is over each covered berth. The effective vent area shall be calculated using a ratio of one square foot of vent to every 15 square feet of covered berth area (1:15). Each vent shall provide a minimum opening size of 4 ft. x 4 ft.

9405.3.1.1 Smoke and heat vents shall operate automatically by actuation of a heat-responsive device rated at between 100 degrees F (56 degrees C) and 220 degrees F (122 degrees C) above ambient.

Exception: Gravity-operated drop out vents.

9405.3.1.2 Gravity-operated drop out vents. Gravity operated dropout vents shall fully open within 5 minutes after the vent cavity is exposed to a simulated fire represented by a time-temperature gradient that reaches an air temperature of 500 degrees F (260 degrees C) within 5 minutes.

9405.4 Draft curtains. Draft curtains shall be provided in covered boat moorage areas exceeding 2,500 sq. ft. (232 m2) in area, excluding roof overhangs.

Exception: Draft curtains are not required in areas protected by automatic sprinklers.

9405.4.1 Draft curtain construction. Draft curtains shall be constructed of sheet metal, gypsum board or other *approved* materials that provide equivalent performance to resist the passage of smoke. Joints and connections shall be smoke tight.

9405.4.2 Draft curtain location and depth. The maximum area protected by draft curtains shall not exceed 2,000 sq. ft. (186 m2) or two slips or berths, whichever is smaller. Draft curtains shall not extend past the piling line. Draft curtains shall have a minimum depth of 2 feet (609 mm) below the lower edge of the roof and shall not extend closer than 8 feet (2438 mm) to the walking surface on the pier.

9405.5 Fire department connections. Standpipe and sprinkler systems shall be equipped with not less than one two-way 21/2-inch (64 mm) fire department connection (FDC), which shall be readily visible and located at the fire apparatus access road or other *approved* location. The FDC for class I standpipe systems may be located at the shore end of the pier, wharf, or float if the

distance between the fire apparatus access road and FDC is less than 150 feet (45,720 mm). See also SFC 9404.3 Fire hydrants.

9405.6 Marina fire protection confidence testing. Standpipe and sprinkler systems shall be inspected and hydrostatically tested at least annually. Reports of inspections and tests shall be submitted to the Seattle Fire Department Confidence Testing Unit in accordance with Administrative Rule 9.02.07 *Confidence Test Requirements for Life Safety Systems.* Notwithstanding fire department inspections, maintenance and periodic testing are the owner's responsibility. All persons performing such work shall have a certificate from the fire department to perform such work. See Administrative Rule 9.01.07 *Certification for Installing, Maintaining and Testing Life Safety Systems and Equipment.*

9405.7 Moorage in intervening moorage space. Vessels moored in open spaces between covered moorage shall not exceed 7 feet (2,133.6 mm) from the top of the vessel superstructure to the waterline, unless protected by an *approved* fire partition.

SECTION 9406

EMERGENCY PLANS AND TRAINING

9406.1 Emergency plan. Owners or operators of piers, wharves, floats and marinas shall prepare and maintain a current emergency plan for the facility. The plan shall include procedures for fire department notification, fire evacuation, and include location of portable fire extinguishers and hose cabinets, sprinkler and standpipe system control valves, fire department connections and electrical disconnects.

9406.2 Signage. Signs, posters, or posted instructions shall be provided where practicable to remind the public of basic fire safety practices and to warn of unusual or extreme fire hazards.

All boat owners at the marina shall be provided with written instructions for reporting fires and other emergencies and actions to be taken in the event of a fire.

9406.2 Point of Information

For examples of emergency plans, see information bulletins located at www.seattle.gov/fire titled Emergency Procedures for Public Occupancies and Fire Evacuation Planning.

9406.3 Employee training. Practice drills shall be held a minimum of twice a year.

9406.3.1 All employees shall know the location of fire-fighting equipment, and shall be instructed in the procedures for response to a fire or other emergency, response to a fire alarm, reporting a fire or other emergency to the proper authorities (and to designated facility employees), and in the employees' designated role(s) in emergency situations. See SFC 9406.

9406.3.2 All employees, including office personnel, shall be given training in the use of portable fire extinguishers.

9406.4 Fire department liaison. If requested by the Seattle Fire Department, management shall assist the fire department in pre-fire planning for the following:

(1) Entries and access routes for equipment within the premises,

(2) Location, construction, use, and accessibility of all buildings and all their subdivisions including basements, storage lockers, and other areas,

(3) Location and extent of outside working areas,

(4) Location and means of access to both dry and wet boat-storage areas,

(5) Type and capacity of standpipes on piers and walkways, including all points where connection of hydrant or pumper supplies can be affected,

(6) Types and capacities of facility equipment, including work or tow boats, portable pumps, pier-mounted hose cabinets, all portable fire extinguishers, and other equipment,

(7) Voltages and capacities of electrical systems, and location of electrical disconnecting means.

SECTION 9407

OPERATIONAL HAZARDS

9407.1 The marina or boatyard operator shall post in a prominent location or provide to boat operators using a marina or boatyard for mooring, repair, servicing, or storage, a list of safe operating procedures containing the following:

(1) Procedures for disposal of trash;

(2) Location of nonsmoking areas;

(3) Location of fire extinguishers and hoses;

(4) Procedures for turning in a fire alarm; and

(5) Fueling procedures.

9407.2 Fueling Operations. Fueling of floating marine craft with Class I fuels at other than a marine motor fuel-dispensing facility is prohibited. Fueling of floating marine craft with Class II or III fuels at other than a marine motor fuel-dispensing facility shall be in accordance with SFC 2210.4.

SECTION 9408

COMPLIANCE

9408.1 Compliance. All corrections that may be necessary to provide the minimum fire safety requirements established in this Chapter shall be completed by the owners as follows:

(a) The *fire code official* shall develop a procedure for surveying marinas to effect compliance with this Chapter. The *fire code official* shall send written and signed notices to the owners of all non- complying marinas. Within 120 days of the date of notification by the *fire code*

official, the owner shall submit to the *fire code official* a concept design and firm schedule for complying with the requirements of this chapter.

(b) The *fire code official* shall review the concept design and firm schedule and respond in writing. The time schedule for compliance shall be measured from the date of the *fire code official*'s response to the concept design and firm schedule for each marina, and shall not exceed the time limits set forth in subsection (c) of this section.

(c) The time limits for complying with the requirements of this Chapter are as follows:

Fire Extinguishers	1 year
Signage	1 year
Emergency Plan	1 year
Smoke and Heat Vents and Draft Curtains	7 years
Fire Hydrants	5 years
Standpipes	7 years
Sprinkler Systems	10 years

(d) Marinas will not be deemed to be in violation of this Chapter until the time limits set forth in subsection (c) above have expired. Appeals to compliance with this section shall be in accordance with SFC 108.

* * *

Section 33. Appendix A of the 2015 International Fire Code is amended as follows:

APPENDIX A

BOARD OF APPEALS

((~~*The provisions contained in this appendix are not mandatory unless specifically referenced in the adopting ordinance.*~~))

SECTION A101

GENERAL

A101.1 Scope. A board of appeals shall be established as needed within the jurisdiction for appeals of Fire Department decisions or actions pertaining to the application and interpretation of

the fire code. ((~~the purpose of hearing applications for modification of the requirements of the *International Fire Code* pursuant to the provisions of Section 108 of the *International Fire Code*.~~)) The board shall be established and operated in accordance with this section, and shall be authorized to hear evidence from appellants and the *fire code official* pertaining to the application and intent of this code. ((~~for the purpose of issuing orders pursuant to these provisions.~~))

The board of appeals' recommendations are advisory only, and are not binding on the Seattle Fire Department. If the Fire Chief declines the board of appeals' recommendations, the Fire Chief will state the reasons why in writing. A copy of this statement shall be provided to the applicant, the members of the Fire Code Advisory Board, the Mayor's Office, and the City Council member who chairs the City Council's Public Safety Committee.

The board of appeals is only established for specific issues and is dissolved once the appeal process is complete for each such issue.

A101.2 Membership. The membership of the board shall consist of five Fire Code Advisory Board members ((~~voting members~~)) three of whom having the qualifications established by this section. Members shall be ((~~nominated by the *fire code official* or the chief administrative officer of the jurisdiction~~)) selected by the Chair of the Fire Code Advisory Board, The Fire Code Advisory Board Chair, at his/her discretion, may appoint or substitute additional Board members to hear a given appeal if he/she believes particular expertise is needed for particular appeals. The board of appeals shall select a chair. ((~~subject to confirmation by a majority vote of the governing body. Members shall serve without remuneration or compensation, and shall be removed from office prior to the end of their appointed terms only for cause.~~))

A101.2.1 Design professional. One member shall be a practicing design professional registered in the practice of engineering or architecture in the state in which the board is established (architect, chemical engineer or mechanical engineer position on the Fire Code Advisory Board).

A101.2.2 ((~~Fire protection engineering professional.~~ ~~One member shall be a qualified engineer, technologist, technician or safety professional trained in fire protection engineering, fire science or fire technology. Qualified representatives in this category shall include fire protection contractors and certified technicians engaged in *fire protection system* design.~~))

General Public. One member shall be from the general public position on the Fire Code Advisory Board.

((~~A101.2.3 Industrial safety professional.~~ ~~One member shall be a registered industrial or chemical engineer, certified hygienist, certified safety professional, certified hazardous materials manager or comparably qualified specialist experienced in chemical process safety or industrial safety.~~

~~A101.2.4 General contractor.~~ ~~One member shall be a contractor regularly engaged in the construction, *alteration*, maintenance, repair or remodeling of buildings or building services and systems regulated by the code.~~))

A101.2.((5))3 General industry or business representative. One member shall be a representative of business or industry (building owners and manager association, fire insurance industry, Port of Seattle, services industry, marine industry, manufacturing/warehousing industry, fire protection industry, labor representative, major institutions, or research/lab industry position on the Fire Code Advisory Board). ((~~not represented by a member from one of the other categories of board members described above.~~))

((~~**A101.3 Terms of office.** Members shall be appointed for terms of 4 years. No member shall be reappointed to serve more than two consecutive full terms.~~

~~**A101.3.1 Initial appointments.** Of the members first appointed, two shall be appointed for a term of 1 year, two for a term of 2 years, one for a term of 3 years.~~

~~**A101.3.2 Vacancies.** Vacancies shall be filled for an unexpired term in the manner in which original appointments are required to be made. Members appointed to fill a vacancy in an unexpired term shall be eligible for reappointment to two full terms.~~

~~**A101.3.3 Removal from office.** Members shall be removed from office prior to the end of their terms only for cause. Continued absence of any member from regular meetings of the board shall, at the discretion of the applicable governing body, render any such member liable to immediate removal from office.~~

~~**A101.4 Quorum.** Three members of the board shall constitute a quorum. In varying the application of any provisions of this code or in modifying an order of the *fire code official*, affirmative votes of the majority present, but not less than three, shall be required.~~

~~**A101.5 Secretary of board.** The *fire code official* shall act as secretary of the board and shall keep a detailed record of all its proceedings, which shall set forth the reasons for its decisions, the vote of each member, the absence of a member and any failure of a member to vote.~~

~~**A101.6 Legal counsel.** The jurisdiction shall furnish legal counsel to the board to provide members with general legal advice concerning matters before them for consideration. Members shall be represented by legal counsel at the jurisdiction's expense in all matters arising from service within the scope of their duties.~~

~~**A101.7 Meetings.** The board shall meet at regular intervals, to be determined by the chairman. In any event, the board shall meet within 10 days after notice of appeal has been received.~~))

A101.((~~8~~))3 Conflict of interest. Members with a material or financial interest in a matter before the board shall declare such interest and refrain from participating in discussions, deliberations and voting on such matters.

((~~**A101.9 Decisions.** Every decision shall be promptly filed in writing in the office of the *fire code official* and shall be open to public inspection. A certified copy shall be sent by mail or otherwise to the appellant, and a copy shall be kept publicly posted in the office of the *fire code official* for 2 weeks after filing.~~))

A101.((~~10~~))4 Procedures. The board of appeals shall be operated in accordance with the procedures and timelines detailed in Section A101.4.1 through A101.4.3.6. ((~~Administrative Procedures Act of the state in which it is established or shall establish rules and regulations for its own procedure not inconsistent with the provisions of this code and applicable state law.~~))

A101.4.1 Preliminary Steps to Request Review by the Board of Appeals. Before requesting a review by the board of appeals, the applicant shall first explore resolution of the compliance problem by proposing modified Code requirements (SFC Section 104.8) or alternative materials and methods (SFC Section 104.9). Prior to requesting review, the applicant shall also discuss the particular compliance situation in depth with the following representatives of the Seattle Fire Department:

1. The appropriate inspector from the Fire Marshal's Office (FMO), the Fire Prevention Division of the Seattle Fire Department.
2. The FMO inspector's supervisor, if the matter cannot be resolved with the inspector.
3. The Fire Marshal, if the matter cannot be resolved with the supervisor.
4. If necessary, the Fire Chief, where agreement cannot be reached with the Fire Marshal.

After discussing the issue as detailed above, the applicant may then submit a written request for review by the board of appeals, addressed to the Fire Chief and sent to the Fire Marshal's attention, concisely stating the issues involved, the factual background, and the relevant Seattle Fire Code section(s). The Fire Code Advisory Chair will determine if the applicant's request is within the scope of the Fire Code in consultation with the applicant and the Fire Marshal.

A101.4.2 The Appeal Process. After the preliminary steps shown above have been pursued, and the applicant has submitted a written request for review by the board of appeals, the next steps in the appeals process, to be completed within the timelines detailed in Section A101.4.3, are as follows:

1. The Seattle Fire Department Technical Code Coordinator will notify the applicant when and where board of appeals meeting will occur.
2. Written statements and exhibits will be submitted to the Technical Code Coordinator from both the applicant and the Fire Department prior to the board of appeals meeting. These statements should include any relevant exhibits such as plans, as well as a list of any expert witnesses. The applicant and Fire Department must submit one copy of their respective statements and attachments for each board of appeals member, with an additional copy for the other party. The Technical Code Coordinator will deliver the copies to the respective parties.
3. The board of appeals will select its own chairperson. The applicant will make its presentation first, followed by the Fire Department. The applicant and the Fire Department should each be limited to 30 minutes for oral presentation, including questions from the board of appeals, unless the board of appeals Chair determines at the beginning of the meeting that more time

is warranted. In any event, each party will be provided equal time to make its presentation to the board of appeals. Each party's oral presentation should address the factual background, the issues and the Seattle Fire Code sections involved. Each party may include design professionals or other persons in its presentation to the board of appeals.

4. The board of appeals may visit the site(s) involved in the compliance dispute, at the request of either the Fire Department or the applicant, or on the board of appeals' own initiative. The applicant shall make the site(s) available to the board of appeals for site visit(s). The site visit(s) will be scheduled through the Technical Code Development Director. No such site visit(s) will be made without a representative of both the Fire Department and the applicant present.

5. The board of appeals shall make its written recommendations concerning the particular compliance situation to the Fire Chief. A copy of the board of appeals' recommendations will also be provided to the applicant, the FCAB Chair, and the other members of FCAB. A statement in the following form, signed by the appropriate officer, shall accompany each report:

This report has been submitted to ballot of the board of appeals which consists of five members, of whom ___ have voted affirmatively, ____ negatively, and ___ have not voted.

6. The board of appeals' recommendations are advisory only, and are not binding on the Seattle Fire Department. If the Fire Chief declines the board of appeals' recommendations, the Fire Chief will state the reasons why in writing. A copy of this statement shall be provided to the applicant, the members of the FCAB, the Mayor's Office and the City Council member who chairs the City Council's Public Safety Committee. In every case, the Fire Chief and Fire

Marshal shall make themselves available to meet with the applicant after the conclusion of the board of appeals review.

A101.4.3 Timelines for the Appeal Processes. Timelines for the appeals processes shall be in accordance with Sections A101.4.3.1 through A101.4.3.6.

A101.4.3.1 Written request for review. The applicant shall submit a written request for a board of appeals review to the Fire Chief within 10 business days after the Chief has notified the applicant of the Chief's decision on the applicant's particular compliance dispute.

A101.4.3.2 Notifying Fire Code Advisory Board of a Request for Review. The Fire Marshal, acting on behalf of the Fire Chief, will make a reasonable effort to notify the Fire Code Advisory Board (FCAB) Chair within three business days (Monday through Friday, holidays excepted) of receiving an applicant's written request for a review by the board of appeals. The Fire Marshal shall provide a copy of the applicant's written request to the FCAB Chair at this time.

A101.4.3.3 Selecting members of the Board of Appeals. The members of the board of appeals will be selected within five business days of the time that the FCAB Chair receives the applicant's written request for review from the Fire Marshal.

A101.4.3.4 Scheduling the meeting. The board of appeals will meet to review the applicant's compliance dispute within 15 business days from its selection by the FCAB Chair. The Technical Code Development Director will contact the FCAB Chair, the members of the board of appeals, the Seattle Fire Department and the applicant to schedule a place and time for the board of appeals' meeting(s).

A101.4.3.5 Written statements and exhibits. The applicant and the Seattle Fire Department will each submit a concise written statement of the issue(s), facts and relevant Seattle Fire Code section(s) involved to the Technical Code Development Director at least seven business days

before the date of the first board of appeals meeting to consider the compliance dispute. The Technical Code Development Director will have these copies delivered at least three business days before the first board of appeals meeting.

A101.4.3.6 The Board of Appeals' Recommendations. Within five business days of its final meeting or site visit regarding the compliance dispute, the board of appeals shall make its written recommendations concerning the particular compliance situation to the Fire Chief. A copy of the board of appeals' recommendations will also be provided to the applicant, the FCAB Chair, and the other members of FCAB. The board of appeals' review and advisory recommendations should be completed within 60 calendar days from the time that the Fire Chief notifies the applicant of the Chief's pre-appeal decision, although more time may be taken if both the applicant and the Fire Marshal agree to an extension of time.

* * *

Section 34. Appendix B of the 2015 International Fire Code is amended as follows:

APPENDIX B

FIRE-FLOW REQUIREMENTS FOR BUILDINGS

B101.1 Scope. The procedure for determining fire-flow requirements for buildings or portions of buildings hereafter constructed or when required by the fire code official for buildings undergoing a substantial alteration shall be in accordance with this appendix. This appendix does not apply to structures other than buildings.

* * *

Section 35. Appendix D of the 2015 International Fire Code is amended as follows:

APPENDIX D

FIRE APPARATUS ACCESS ROADS

The provisions contained in this appendix are not mandatory unless specifically referenced in the adopting ordinance.

SECTION D101

GENERAL

D101.1 Scope. Fire apparatus access roads other than public streets shall be in accordance with this appendix and all other applicable requirements of the *International Fire Code*.

SECTION D102

REQUIRED ACCESS

D102.1 Access and loading. Facilities, buildings or portions of buildings hereafter constructed, substantially altered or moved into or within the jurisdiction when required by the fire code official shall be accessible to fire department apparatus by way of an *approved* fire apparatus access road with an asphalt, concrete or other *approved* driving surface capable of supporting the imposed load of fire apparatus weighing at least 75,000 pounds (34 050 kg).

SECTION D103

MINIMUM SPECIFICATIONS

* * *

((~~**D103.1 Access road width with a hydrant.** Where a fire hydrant is located on a fire apparatus access road, the minimum road width shall be 26 feet (7925 mm), exclusive of shoulders (see Figure D103.1).~~))

D103.((~~2~~))1 Grade. Fire apparatus access roads shall not exceed 10 percent in grade.

Exception: Grades steeper than 10 percent as approved by the fire ((chief)) code official.

D103.((~~3~~))2 Turning radius. The minimum turning radius shall be determined by the fire code official.

D103.((4))3 Dead ends. Dead-end fire apparatus access roads in excess of 150 feet (45 720 mm) shall be provided with width and turnaround provisions in accordance with Table D103.((4))3 and Figure D103.3.

TABLE D103.3((4))

REQUIREMENTS FOR DEAD-END FIRE

APPARATUS ACCESS ROADS

[Table D103.4 not reproduced here. No amendments are proposed for the table, other than renumbering (editorial) to reflect Section D103.3 which it supports.]

* * *

FIGURE D103.3

DEAD-END FIRE APPARATUS ACCESS ROAD TURNAROUND

96 Foot Cul-de-sac

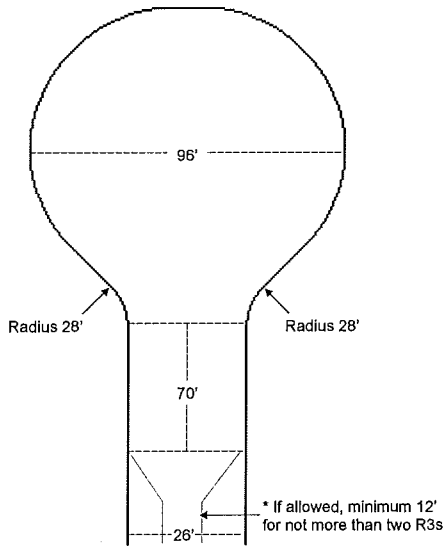

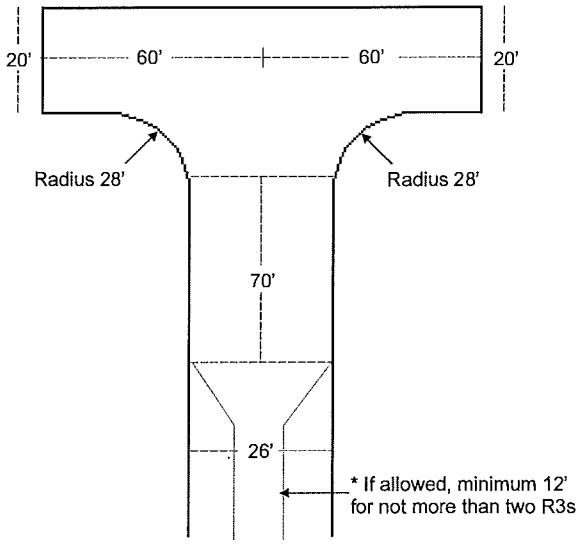

120 Foot Hammerhead

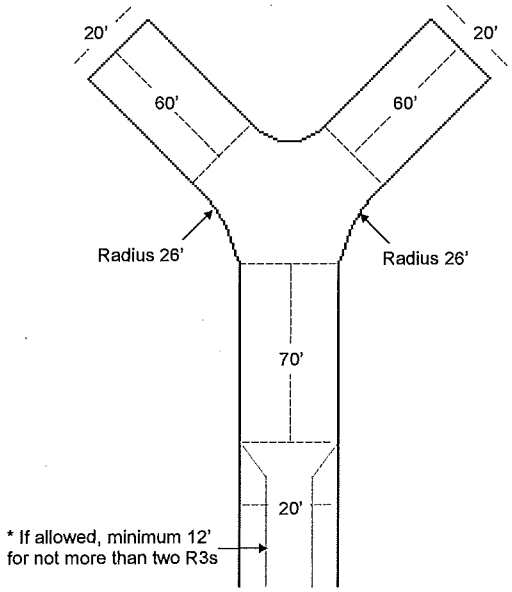

60 Foot Y – Acceptable Alternative to 120 Foot Hammerhead

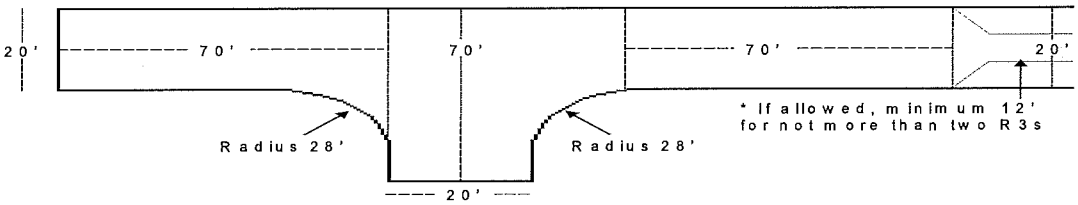

Acceptable Alternative to 120 Foot Hammerhead

D103.4((5)) Fire apparatus access road gates. Gates securing the fire apparatus access roads shall comply with all of the following criteria:

1. The minimum gate width shall be 20 feet (6096 mm).

Exception: Access roads serving not more than two Group R-3 or Group U occupancies shall have an unobstructed width of not less than 12 feet.

2. Gates shall be of the swinging or sliding type.

3. Construction of gates shall be of materials that allow manual operation by one *person*.

4. Gate components shall be maintained in an operative condition at all times and replaced or repaired when defective.

5. Electric gates shall be equipped with a means of opening the gate by fire department personnel for emergency access. Emergency opening devices shall be *approved* by the *fire code official*.

6. Methods of locking device specifications shall be submitted for approval by the *fire code official*.

Exception: Bollards are an approved alternate if they can be readily removed by one person, and they shall not be locked with a padlock or chain unless they are capable of being removed by means of a forcible entry tool or approved locking device.

8. Electric gate operators, where provided, shall be *listed* in accordance with UL 325.

9. Gates intended for automatic operation shall be designed, constructed and installed to comply with the requirements of ASTM F 2200.

D103.5((~~6~~)) Signs. Where required by the *fire code official*, fire apparatus access roads shall be marked with permanent NO PARKING—FIRE LANE signs complying with Figure D103.5((~~6~~)). Signs shall have a minimum dimension of 12 inches (305 mm) wide by 18 inches (457 mm) high and have red letters on a white reflective background. Signs shall be posted on one or both sides of the fire apparatus road as required by Section D103.5((~~6~~)).1 or D103.5((~~6~~)).2.

FIGURE D103.5((~~6~~))

FIRE LANE SIGNS

[Figure D103.6 not reproduced here. No amendments are proposed for the FIGURE, other than renumbering (editorial) to reflect Section D103.5 which it supports.]

* * *

D103.5((~~6~~)).1 Roads 12((~~20~~)) to 26 feet in width. Fire apparatus access roads 12((~~20~~)) to 26 feet wide (6096 to 7925 mm) shall be posted on both sides as a *fire lane*.

D103.5((~~6~~)).2 Roads more than 26 feet in width. Fire apparatus access roads more than 26 feet wide (7925 mm) to 32 feet wide (9754 mm) shall be posted on one side of the road as a *fire lane*.

SECTION D104

COMMERCIAL AND INDUSTRIAL DEVELOPMENTS

D104.1 Buildings exceeding three stories or 30 feet in height. Buildings or facilities exceeding 30 feet (9144 mm) or three stories in height shall have at least two means of fire apparatus access for each structure.

Exception: Projects that have a single approved fire apparatus access road when all buildings are equipped throughout with approved automatic sprinkler systems.

SECTION D105

AERIAL FIRE APPARATUS ACCESS ROADS

D105.1 Where required. Buildings or portions of buildings or facilities exceeding 30 feet (9144 mm) in height above the lowest level of fire department vehicle access shall be provided with *approved* fire apparatus access roads capable of accommodating fire department aerial apparatus. Overhead utility and power lines shall not be located within the aerial fire apparatus access roadway.

Exceptions:

1. Buildings that are equipped throughout with an approved automatic sprinkler system.

2. One and two family dwellings and townhouses.

* * *

Section 36. Sections 2 through 44 of Ordinance 124288 are hereby repealed.

Section 37. Severability. The provisions of this ordinance are declared to be separate and severable. The invalidity of any clause, sentence, paragraph, subdivision, section or portion of this ordinance, or the invalidity of its application to any person or circumstance, shall not affect the validity of the remainder of this ordinance, or the validity of its application to other persons or circumstances.

Section 38. This ordinance shall take effect and be in force 30 days after its approval by the Mayor, but if not approved and returned by the Mayor within ten days after presentation, it shall take effect as provided by Seattle Municipal Code Section 1.04.020.

Passed by the City Council the 26th day of September, 2016, and signed by me in open session in authentication of its passage this 26th day of September, 2016.

Bruce A. Harrell

President _____ of the City Council

Approved by me this 29th day of September, 2016.

Edward B. Murray

Edward B. Murray, Mayor

Filed by me this 29th day of September, 2016.

Emilia M. Sanchez

for Monica Martinez Simmons, City Clerk

(Seal)

STATE OF WASHINGTON -- KING COUNTY

--ss.

342660 No. TITLE ONLY

CITY OF SEATTLE,CLERKS OFFICE

Affidavit of Publication

The undersigned, on oath states that he is an authorized representative of The Daily Journal of Commerce, a daily newspaper, which newspaper is a legal newspaper of general circulation and it is now and has been for more than six months prior to the date of publication hereinafter referred to, published in the English language continuously as a daily newspaper in Seattle, King County, Washington, and it is now and during all of said time was printed in an office maintained at the aforesaid place of publication of this newspaper. The Daily Journal of Commerce was on the 12th day of June, 1941, approved as a legal newspaper by the Superior Court of King County.

The notice in the exact form annexed, was published in regular issues of The Daily Journal of Commerce, which was regularly distributed to its subscribers during the below stated period. The annexed notice, a

CT:125134,38-50 & 125169

was published on

10/20/16

The amount of the fee charged for the foregoing publication is the sum of $223.30 which amount has been paid in full.

JENNIFER A BARNES NOTARY PUBLIC STATE OF WASHINGTON COMMISSION EXPIRES

Subscribed and sworn to before me on

10/20/2016

Notary public for the State of Washington,
residing in Seattle

Affidavit of Publication

State of Washington, King County

City of Seattle

The full text of the following legislation, passed by the City Council on September 26, 2016, and published below by title only, will be mailed upon request, or can be accessed at http:// seattle.legistar.com. For information on upcoming meetings of the Seattle City Council, please visit http://www.seattle.gov/council/calendar.

Ordinance 125134

AN ORDINANCE relating to land use and zoning; amending Chapter 23.32 of the Seattle Municipal Code at page 112 of the Official Land Use Map to rezone property located at 2220 East Union Street from Neighborhood Commercial 2-40 (NC2-40) to Neighborhood Commercial 2-65 (NC2-65) and from Neighborhood Commercial 2-40 with a pedestrian designation (NC2P-40) to Neighborhood Commercial 2-65 with a pedestrian designation (NC2P-65); and accepting a Property Use and Development Agreement as a condition of rezone approval. (Petition by East Union 22, LLC, C.F. 314312, SDCI Project 3019001)

Ordinance 125138

AN ORDINANCE relating to the Seattle Fire Code, adopting as the Seattle Fire Code the 2015 edition of the International Fire Code with some exceptions, amending and adding various provisions to that code; amending Section 22.600.020 of the Seattle Municipal Code; and repealing Sections 2 through 44 of Ordinance 124288.

Ordinance 125139

AN ORDINANCE relating to Seattle Public Utilities; authorizing the Director of Seattle Public Utilities to accept on behalf of The City of Seattle the transfer of approximately 155 acres of forest land in the North Fork Tolt River Watershed from Forterra and to acquire approximately 100 acres of forest land located adjacent to the Forterra property and the South Fork Tolt Municipal Watershed owned by the City.

Ordinance 125140

AN ORDINANCE related to Seattle Public Utilities; authorizing the Director of Seattle Public Utilities to enter into an Interlocal Agreement with the Port of Seattle to serve as an operating agreement between Seattle Public Utilities and the Port of Seattle Drainage Utility including code modifications to exclude all Port-owned properties from the requirement to pay City stormwater and drainage fees; terminating the 1997 stormwater credit from the City to the Port; accepting a settlement payment from the Port of Seattle; containing details related to ownership and maintenance of infrastructure, authorities and responsibilities, system interconnections, access, coordination and dispute resolution; amending Section 21.33.030 of the Seattle Municipal Code; and ratifying and confirming certain prior acts

Ordinance 125141

AN ORDINANCE relating to Seattle Public Utilities; authorizing the Director of Seattle Public Utilities to accept a loan from the Washington State Public Works Board and to execute, deliver, and perform corresponding agreements; and ratifying and confirming certain prior acts.

Ordinance 125142

AN ORDINANCE granting Swedish Health Services permission to construct, maintain, and operate a pedestrian skybridge over and across Minor Avenue, between Columbia Street and Cherry Street, for a ten-year term, renewable for two successive ten-year terms; specifying the conditions under which this permit is granted; and providing for the acceptance of the permit and conditions.

Ordinance 125143

AN ORDINANCE relating to the Department of Parks and Recreation; authorizing the acceptance of a donation of real property in Seattle from the Madison Valley Park Foundation for open space, park, and recreation purposes.

Ordinance 125144

AN ORDINANCE relating to City employment; authorizing the execution of a collective bargaining agreement between The City of Seattle and the International Brotherhood of Electrical Workers Local No. 77 Information Technology Professionals Unit; and ratifying and confirming certain prior acts.

Ordinance 125145

AN ORDINANCE relating to City employment; adjusting the pay zones for certain job titles in the City's Information Technology Professional discretionary pay program; and ratifying and confirming certain prior acts.

Ordinance 125146

AN ORDINANCE relating to City employment; authorizing the execution of a collective bargaining agreement between The City of Seattle and the International Brotherhood of Electrical Workers Local No. 77, Construction Maintenance Equipment Operator Unit; and ratifying and confirming certain prior acts.

Ordinance 125147

AN ORDINANCE relating to City employment; authorizing the execution of a collective bargaining agreement between The City of Seattle and the International Brotherhood of Electrical Workers Local No. 77, Material Controllers Unit; and ratifying and confirming certain prior acts.

Ordinance 125148

AN ORDINANCE relating to City employment; amending Section 4.04.030 of the Seattle Municipal Code; authorizing a Memorandum of Understanding between The City of Seattle and certain City unions; and ratifying and confirming certain prior acts.

Ordinance 125149

AN ORDINANCE relating to utility permits and regulations; amending Sections 15.32.050 and 15.32.160 of the Seattle Municipal Code.

Ordinance 125150

AN ORDINANCE appropriating money to pay certain audited claims and ordering the payment thereof.

Ordinance 125169

AN ORDINANCE relating to arterial and non-arterial speed limits; amending Sections 11.52.060 and 11.52.080 of the Seattle Municipal Code.

Date of publication in the Seattle Daily Journal of Commerce, October 20, 2016.

10/20(342660)