Ordinance No. 121519

Council Bill No. 114931

The City of Seattl

Council Bill/Ordina

AN ORDINANCE relating to Building and Construction Codes: amending Chapter 22.100 of the Seattle Municipal Code, the Seattle Building Code; adopting Chapters 2 through 28, Chapters 31 through 33, and Chapter 35 of the 2003 International Building Code; amending Chapter 2, Definitions; Chapter 3, Use and Occupancy Classification; Chapter 4, Special Detailed Requirements Based on Use and Occupancy; Chapter 5, General Building Heights and Areas; Chapter 6, Types of Construction; Chapter 7, Fire-resistance-rated Construction; Chapter 9, Fire Protection Systems; Chapter 10, Means of Egress; Chapter 11, Accessibility; Chapter 12, Interior Environment; Chapter 13, Energy Efficiency; Chapter 14, Exterior Walls; Chapter 15, Roof Assemblies and Rooftop Structures; Chapter 16, Structural Design; Chapter 17, Structural Tests and Special Inspections; Chapter 18, Soils and Foundations; Chapter 19, Concrete; Chapter 21, Masonry; Chapter 23, Wood; Chapter 25, Gypsum Board and Plaster; Chapter 27, Electrical; Chapter 31, Special Construction; Chapter 32, Encroachments into the Public Right-of-way; Chapter 33, Safeguards During Construction; and Chapter 35, Referenced Standards; and adding a new Chapter 1 related to administration, permitting and enforcement, a new Chapter 29, Plumbing Systems, a new Chapter 30, Elevators and Conveying Systems, and a new Chapter 34, Existing Structures; and repealing the 1997 Seattle Building Code.

CF No. 321251

Date Introduced: JUN 21 2004	
Date 1st Referred: JUN 21 2004	To: (committee) Urban Development & Planning
Date Re - Referred:	To: (committee)
Date Re - Referred:	To: (committee)
Date of Final Passage: 7-6-04	Full Council Vote: 8-0
Date Presented to Mayor: 7-7-04	Date Approved: 7-16-04
Date Returned to City Clerk: 7-16-04	Date Published: SLD T.O. F.T. 2
Date Vetoed by Mayor:	Date Veto Published:
Date Passed Over Veto:	Veto Sustained:

7-6-04 Passe

(5-0 CC

This file is complete and ready

Law Dept. Review

The City of Seattle - Legislative Department

Council Bill/Ordinance sponsored by: Rich Stubblefield

Councilmember

Committee Action:

Passed 2-0 PS, 7R

7-6-04 Passed 8-0

(Excused: Drago)

This file is complete and ready for presentation to Full Council. Committee: (initial/date)

Law Department

Law Dept. Review	OMP Review	City Clerk Review	Electronic Copy Loaded	Indexed

Maureen Traxler/ma
IBC ord ch 11-34
April 30, 2004
version #1

ORDINANCE 121519

AN ORDINANCE relating to Building and Construction Codes: amending Chapter 22.100 of the Seattle Municipal Code, the Seattle Building Code; adopting Chapters 2 through 28, Chapters 31 through 33, and Chapter 35 of the 2003 International Building Code; amending Chapter 2, Definitions; Chapter 3, Use and Occupancy Classification; Chapter 4, Special Detailed Requirements Based on Use and Occupancy; Chapter 5, General Building Heights and Areas; Chapter 6, Types of Construction; Chapter 7, Fire-resistance-rated Construction; Chapter 9, Fire Protection Systems; Chapter 10, Means of Egress; Chapter 11, Accessibility; Chapter 12, Interior Environment; Chapter 13, Energy Efficiency; Chapter 14, Exterior Walls; Chapter 15, Roof Assemblies and Rooftop Structures; Chapter 16, Structural Design; Chapter 17, Structural Tests and Special Inspections; Chapter 18, Soils and Foundations; Chapter 19, Concrete; Chapter 21, Masonry; Chapter 23, Wood; Chapter 25, Gypsum Board and Plaster; Chapter 27, Electrical; Chapter 31, Special Construction; Chapter 32, Encroachments into the Public Right-of-way; Chapter 33, Safeguards During Construction; and Chapter 35, Referenced Standards; and adding a new Chapter 1 related to administration, permitting and enforcement, a new Chapter 29, Plumbing Systems, a new Chapter 30, Elevators and Conveying Systems, and a new Chapter 34, Existing Structures; and repealing the 1997 Seattle Building Code.

BE IT ORDAINED BY THE CITY OF SEATTLE AS FOLLOWS:

Section 1. Section 22.100.010 of the Seattle Municipal Code is amended as follows:

SMC 22.100.010 Adoption of the ((~~Uniform~~)) <u>International</u> Building Code. The following are hereby adopted and by this reference made a part of this subtitle: ((~~Uniform~~)) <u>International</u> Building Code, ((~~1997~~)) <u>2003</u> edition, excepting Chapters 1, ((~~11,~~)) 29, 30((~~, 32~~)) and 34 ((~~and including the Uniform Building Code Standards, 1997 edition,~~)) as published by the International ((~~Conference of Building Officials~~)) <u>Code Council</u>; ASME A17.1-((~~1996~~)) <u>2000</u> with ASME A17.1a-((~~1994~~)) <u>2002 and ASME A17b-2003</u> Addenda <u>and Appendices A through M, and Appendix O</u>, Safety Code for Elevators and Escalators, excepting ((~~Part XIX~~)) <u>Section 5.10</u> of ASME A17.1, Elevators Used for Construction; <u>ASME A18.1-1999, A18.1a-2001 and A18.1b-2001, Safety Standard For Platform Lifts and Stairway Chairlifts;</u> Washington Administrative Code Chapter ((~~296-81, Sections .005 through .370, Safety rules governing elevators, dumbwaiters, escalators and other lifting devices - moving walks; Washington~~

~~Administrative Code Chapter 296-91, Safety regulations for casket lifts in mortuaries; Washington Administrative Code Chapter 296-93 for Material lifts; and Washington Administrative Code Chapter 296-95, Minimum standards for existing conveyances~~)) 296-96, Safety regulations for all elevators, dumbwaiters, escalators and other conveyances. One copy of each of the above is filed with the City Clerk in C.F. ((~~302707~~)) 306756.

The Seattle Building Code shall consist of the adopted provisions of the ((~~Uniform~~)) International Building Code ((~~and Uniform Building Code Standards, 1997~~)) 2003 edition, and the codes and standards listed above, together with the amendments and additions thereto adopted.

Section 2. The 1997 Seattle Building Code adopted by Ordinance 119079 and amended by Ordinances 120379 is hereby repealed.

Section 3. Chapter 1 of the Seattle Building Code shall read as follows:

Chapter 1

ADMINISTRATION

NOTE: Chapter 1 is entirely Seattle amendments to the International Building Code and is not underlined.

SECTION 101

TITLE, PURPOSE AND SCOPE

101. 1 Title. This subtitle shall be known as the "Seattle Building Code" and may be so cited, and is referred to herein as "this code."

101.2 Scope. The provisions of this code shall apply to the construction, alteration, moving, demolition, repair and occupancy of any building or structure within the City, except public utility towers and poles, mechanical equipment not specifically regulated in this code, and

hydraulic flood control structures. See Chapter 32 for regulation of structures located on, over or under public property or a public right of way.

Exception: Detached one- and two-family dwellings and multiple single-family dwellings (town houses) not more than three stories above grade plane in height with a separate means of egress and their accessory structures shall comply with the *International Residential Code.*

Additions, alterations, repairs, and changes of occupancy or character of occupancy in all buildings and structures shall comply with the provisions for new buildings and structures, except as otherwise provided in Chapter 34 of this code.

Code Alternate CA101.2: A building which fully complies with the Washington State Building Code may be permitted for construction and occupancy without meeting all requirements of this Seattle Building Code, provided the building complies with the following Seattle Building Code provisions, when applicable:

1. Section 414.1.4 and Section 1614.6 requirements for pre-application meetings for hazardous occupancies and buildings with unusual load resisting structural designs;
2. Section 420 and Section 1016 requirements for one-hour construction and corridor construction for certain residential occupancies;
3. Chapter 4 requirements for construction in the fire district;
4. Section 403 provisions for high rise buildings;
5. Section 404 provisions for atria;
6. Section 903.2.1.2, 903.2.2 903.2.5.2 903.2.10.4 sprinkler requirements for Group A-2, E, LC occupancies, and certain storage and sales occupancies;
7. Section 501 addressing provisions;
8. Seattle Residential Code provisions for floating homes; and
9. Section 421 provisions for waterfront piers.

ACTING CITY CLERK

101.3 Purpose. The purpose of this code is to provide minimum standards to safeguard life or limb, health, property and public welfare by regulating and controlling the design, construction, quality of materials, occupancy, location and maintenance of all buildings and structures within the City and certain equipment specifically regulated herein.

The purpose of this code is to provide for and promote the health, safety and welfare of the general public, and not to create or otherwise establish or designate any particular class or group of persons who will or should be especially protected or benefited by the terms of this code.

101.4 Internal Consistency. Where in any specific case, different sections of this code specify different materials, methods of construction or other requirements, the most restrictive shall govern. Where there is a conflict between a general requirement and a specific requirement, the specific requirement shall be applicable.

101.5 Appendices. Provisions in the appendices shall not apply unless specifically adopted.

[W] 101.6 Conflict with Ventilation Code. In the case of conflict between the ventilation requirements of this code and the Washington State Ventilation and Indoor Air Quality Code, the provisions of the Washington State Ventilation and Indoor Air Quality Code shall govern.

101.7 Metric units. Wherever in this ordinance there is a conflict between metric units of measurement and English units, the English units shall govern.

SECTION 102

UNSAFE BUILDINGS, STRUCTURES OR PREMISES

102.1 Definition. For the purpose of this section unsafe buildings, structures or premises shall be defined to include all buildings or structures, whether erected before or after the effective date of this code, and all premises immediately surrounding buildings or structures which are structurally unsound or unsafe or not provided with adequate egress, or which constitute a fire

ACTING CITY CLERK

hazard, or are otherwise dangerous to human life or which in relation to existing occupancy constitute a hazard to safety, health or public welfare by reason of inadequate maintenance, deterioration, instability, dilapidation, obsolescence, damage by fire or other causes or abandonment as specified in this code or any other effective ordinance.

102.2 Emergency Orders. Whenever the building official finds that any building or structure, or portion thereof is in such a dangerous and unsafe condition as to constitute an imminent hazard to life or limb, the building official may issue an emergency order directing that the building or structure, or portion thereof be restored to a safe condition. The order shall specify the time for compliance. The order may also require that the building or structure, or portion thereof, be vacated within a reasonable time, to be specified in the order. In the case of extreme danger, the order may specify immediate vacation of the building or structure, or may authorize disconnection of the utilities or energy source pursuant to the notice provisions of Section 104.6. No person shall occupy the building or structure, or portion thereof after the date on which the building is required to be vacated until the building or structure, or portion thereof, is restored to a safe condition as required by the order and this code. It shall be unlawful for any person to fail to comply with an emergency order issued by the building official.

102.3 Hazard Correction Order. Whenever the building official finds that an unsafe building, structure or premises exists, the building official may issue a hazard correction order specifying the conditions causing the building, structure or premises to be unsafe and directing the owner or other person responsible for the unsafe building, structure or premises to correct the condition. In lieu of correction, the owner may submit a report or analysis to the building official analyzing said conditions and establishing that the building, structure or premises is, in fact, safe. The building official may require that the report or analysis be prepared by a

ACTING CITY CLERK

licensed engineer and may require compliance with Chapter 34. It shall be unlawful for any person to fail to comply with a hazard correction order as specified in this subsection.

SECTION 103

VIOLATIONS AND PENALTIES

103.1. Violations. It shall be a violation of this code for any person, firm or corporation to erect, construct, enlarge, repair, move, improve, remove, convert, demolish, equip, occupy, inspect or maintain any building or structure in the City, contrary to or in violation of any of the provisions of this code.

It shall be a violation of this code for any person, firm or corporation to knowingly aid, abet, counsel, encourage, hire, commend, induce or otherwise procure another to violate or fail to comply with this code.

It shall be a violation of this code for any person, firm or corporation to use any material or to install any device, appliance or equipment which does not comply with applicable standards of this code or which has not been approved by the building official.

103.2. Notice of Violation. If after investigation the building official determines that standards or requirements of this code have been violated, the building official may serve a notice of violation upon the owner or other person responsible for the action or condition. The notice of violation shall state the standards or requirements violated, shall state what corrective action, if any, is necessary to comply with the standards or requirements, and shall set a reasonable time for compliance. The notice shall be served upon the owner or other responsible person by regular first class mail addressed to the last known address of such person. In addition, a copy of the notice may be posted at a conspicuous place on the property. The notice of violation shall be considered an order of the building official. Nothing in this subsection shall be deemed to limit or preclude any action or proceeding pursuant to Sections 102 or 104

ACTING CITY CLERK

of this code, and nothing in this section shall be deemed to obligate or require the building official to issue a notice of violation prior to the imposition of civil or criminal penalties in this section.

103.3 Civil Penalties. Any person, firm or corporation failing to comply with the provisions of this code shall be subject to a cumulative civil penalty in an amount not to exceed $500 per day for each violation from the date the violation occurs or begins until compliance is achieved. In cases where the building official has issued a notice of violation, the violation will be deemed to begin, for purposes of determining the number of days of violation, on the date compliance is required by the notice of violation. In any civil action for a penalty, the City has the burden of proving by a preponderance of the evidence that a violation exists or existed; the issuance of the notice of violation or of an order following a review by the Director is not itself evidence that a violation exists.

103.4 Criminal Penalty. Any person who violates or fails to comply with this chapter shall be guilty of a gross misdemeanor subject to the provisions of Chapters 12A.02 and 12A.04, except that absolute liability shall be imposed for such a violation or failure to comply and none of the mental states described in Section 12A.04.030 need be proved. The Director may request the City Attorney prosecute such violations criminally as an alternative to the civil penalty provision outlined in this code. Each day any person, firm or corporation shall continue to violate or fail to comply with the provisions of this chapter and each occurrence of a prohibited activity shall constitute a separate offense.

103.5 Additional Relief. The building official may seek legal or equitable relief to enjoin any acts or practices and abate any condition that constitutes a violation of this code when civil or criminal penalties are inadequate to effect compliance. In any such action, the City has the burden of proving by a preponderance of the evidence that a violation exists or will exist; the

ACTING CITY CLERK

issuance of the notice of violation or of an order following a review by the Director is not itself evidence that a violation exists or will exist.

103.6 Notices. It shall be unlawful for any person to remove, mutilate, destroy or conceal any notice issued or posted by the building official pursuant to the provisions of this code, or any notice issued or posted by the building official in response to a natural disaster or other emergency.

The building official may record a copy of any order or notice with the Department of Records and Elections of King County.

The building official may record with the Department of Records and Elections of King County a notification that a permit has expired without a final inspection after reasonable efforts have been made to provide a final inspection.

103.7 Review By The Director

103.7.1 Any person affected by a notice of violation issued by the Director pursuant to Section 103.2 may obtain a review of the notice by requesting such review in writing within ten days after service of the notice. When the last day of the period computed is a Saturday, Sunday, federal or City holiday, the period shall run until 5:00 p.m. of the next business day. Upon receipt of a request, the Director shall notify the person requesting the review of the date, time and place of the Director's review. The review shall be not less than ten nor more than twenty days after the request is received, unless otherwise agreed by the person requesting the review. Any person affected by the notice of violation may submit any written material to the Director for consideration on or before the date of the review.

103.7.2 The review will consist of an informal review meeting held at the Department. A representative of the Director who is familiar with the case and the applicable regulations will attend. The Director's representative will consider any information presented by the

ACTING CITY CLERK

persons attending and in the Department's enforcement file. At or after the review, the Director shall issue an order of the Director that may:

1. Sustain the notice of violation; or
2. Withdraw the notice of violation; or
3. Continue the review to a future date; or
4. Amend the notice of violation.

103.7.3 The Director shall issue an order within a reasonable time after the conclusion of the review. The Director shall mail the order by regular first class mail to the person or persons named in the notice of violation.

SECTION 104

ORGANIZATION AND ENFORCEMENT

104.1 Jurisdiction of Department of Planning and Development. The Department of Planning and Development is the code enforcement agency in the City of Seattle for this code. The Department is under the administrative and operational control of the Director of the Department of Planning and Development who is the building official.

104.2 Powers and Duties of the Building Official. The building official is authorized and directed to enforce this code, except where authority as elsewhere provided in this code is specifically vested in the Director of Public Health, the fire chief, the Director of Transportation or the Director of Seattle Public Utilities. Compliance with the requirements of this code is the obligation of the owner of the building, structure, or premises, the duly authorized agent of the owner, or other person responsible for the condition or work, and not of the City or any of its officers or employees.

ACTING CITY CLERK

104.3 Deputies. The building official may appoint such officers, inspectors and assistants and other employees as shall be authorized from time to time. The building official may deputize such employees as may be necessary to carry out the functions of the building official.

104.4 Right of Entry. With the consent of the owner or occupier of a building or premises, or pursuant to a lawfully issued warrant, the building official may enter a building or premises at any reasonable time to perform the duties imposed by this code.

104.5 Stop Orders. Whenever any work is being done contrary to the provisions of this code, or in the event of dangerous or unsafe conditions related to construction or demolition, the building official may order the affected work stopped by a notice describing the violation in writing, posted on the premises or served on any person responsible for the condition or work. It is unlawful for any person to engage in or to cause any further work to be done until authorization from the building official is received.

104.6 Occupancy Violations. Whenever any building or structure is being occupied contrary to the provisions of this code, the building official may order such occupancy discontinued and the building or structure, or portion thereof, vacated by notice, posted on the premises or served on any person causing such occupancy to be continued.

Any person occupying the building or structure shall discontinue the occupancy within 10 days after receipt or posting of such notice or shall make the building or structure, or portion thereof, comply with the requirements of this code; provided, however, that in the event of an unsafe building, Section 102 may apply. It is unlawful for any person to fail to comply with an order or notice issued by the building official.

104.7 Liability. Nothing contained in this code is intended to be nor shall be construed to create or form the basis for any liability on the part of the City, or its officers, employees or agents, for any injury or damage resulting from the failure of a building to conform to the provisions of this code, or by reason or in consequence of any inspection, notice, order,

ACTING CITY CLERK

certificate, permission or approval authorized or issued or done in connection with the implementation or enforcement of this code, or by reason of any action or inaction on the part of the City related in any manner to the enforcement of this code by its officers, employees or agents.

Neither the building official nor any employee charged with the enforcement of this code shall be personally liable for any damage that accrues to persons or property as a result of any act or omission committed in the discharge of their duties, provided that the building official or employee acted in good faith and without malice.

This code shall not be construed to relieve from or lessen the responsibility of any person owning, operating or controlling any building or structure for any damages to persons or property caused by defects, nor shall the Department of Planning and Development or the City of Seattle be held to have assumed any such liability by reason of the inspections authorized by this code or any permits or certificates issued under this code.

104.8 Duties of the Fire Chief. The duties of the fire chief are as defined in the Fire Code.

104.9 Responsibilities of Project Architect or Structural Engineer of Record. It is the responsibility of the Project Architect or Structural Engineer of Record to ensure that the information on the contract documents submitted for a building permit is complete and to the best of his/her knowledge conforms to the requirements of this code.

104.10 Responsibilities of Structural Engineer of Record. It is the responsibility of the Structural Engineer of Record to:

1. Design the primary structure;

   Exception: A licensed engineer other than the Structural Engineer of Record may design the primary structure of single-story metal buildings.

ACTING CITY CLERK

2. Specify design loads, configurations, controlling dimensions, deflection limits and/or other criteria necessary for the design of secondary structural components and sub-systems and the selection of structurally qualified products;
3. Determine the adequacy and conformance of the application of the structurally qualified products with the design intent of the City approved contract documents;
4. Review for compatibility with the design intent of the City approved contract documents the shop drawings for the primary structural parts and design and shop drawings for secondary structural parts for the following structural elements:

Wood trusses	Glue-lam beams
Steel joists	Structural steel
Steel decking	Prefabricated stair systems
Precast concrete piles	Post-tensioned floor systems
Curtain wall systems	Precast prestress planks
Major skylight frames	Precast concrete/masonry wall panels

The building official may approve additions to, or deletions from this list.

If there is no Structural Engineer of Record on the project, the Project Architect shall assume these responsibilities.

For the purpose of this section, primary structure and secondary structural parts shall be defined as follows:

1. Primary Structure consists of the foundation(s), structural floor(s), roof and walls, bracing members, columns, all other structural components and all connections within and between these elements, which, acting together, provide a complete stable structural framework.
2. Secondary Structural Part (component or subsystem) is a structurally significant portion of the building that is supported by the primary structure, but which does not contribute

ACTING CITY CLERK

to the strength or stability of the primary structure. Such a part must have internal structural integrity to perform its function and must have its interactions with, and its attachments to the primary structure analyzed and designed to assure its proper integration within the total structure.

104.11 Responsibilities of Contractor. It is the responsibility of the Contractor to perform all the work in conformance with the City approved contract documents.

104.12 Responsibilities of Plans Examiner. It is the responsibility of the plans examiner to verify that the description of the work in an application for permit and permit plans is substantially complete, and to require corrections where, to the best of the plans examiner's knowledge, the plans do not conform to this code or other pertinent laws and ordinances.

104.13 Responsibilities of Field Inspector. It is the responsibility of the field inspector to make called inspections to verify that the work in progress conforms with the approved plans and to require corrections where, to the best of the field inspector's knowledge, the work either does not conform to the plans or where the work is in violation of this code or other pertinent laws and ordinances.

104.14 Modifications. The building official may modify the requirements of this code for individual cases provided the building official finds: (1) there are practical difficulties involved in carrying out the provisions of this code; (2) the modification is in conformity with the intent and purpose of this code; and (3) the modification will provide a reasonable level of fire protection and structural integrity when considered together with other safety features of the building or other relevant circumstances. The building official may, but is not required to, record the approval of modifications and any relevant information in the files of the building official or on the approved permit plans.

104.15 Alternate Materials, Methods of Construction and Design. This code does not prevent the use of any material, design or method of construction not specifically allowed or

ACTING CITY CLERK

prohibited by this code, provided the alternate has been approved and its use authorized by the building official.

The building official may approve an alternate, provided he/she finds that the proposed alternate complies with the provisions of this code and that the alternate, when considered together with other safety features of the building or other relevant circumstances, will provide at least an equivalent level of strength, effectiveness, fire resistance, durability, safety and sanitation. Certain code alternates have been pre-approved by the building official and are identified in this code as numbered code alternates.

The building official may require that sufficient evidence or proof be submitted to reasonably substantiate any claims regarding the use or suitability of the alternate. The building official may, but is not required to, record the approval of modifications and any relevant information in the files of the building official or on the approved permit plans.

104.16 Tests. Whenever there is insufficient evidence of compliance with any of the provisions of this code or evidence that any material or construction does not conform to the requirements of this code, the building official may require tests as proof of compliance to be made at no expense to the City.

Test methods shall be specified by this code or by other recognized test standards. If there are no recognized and accepted test methods for the proposed alternate, the building official shall determine the test procedures. All tests shall be made by an approved agency. Reports of such tests shall be retained by the building official.

104.17 Rules of the Building Official.

104.17.1 Authority of Building Official. The building official has the power to render interpretations of this code and to adopt and enforce rules and regulations supplemental to this code as may be deemed necessary in order to clarify the application of the provisions of this code. Such interpretations, rules and regulations shall be in conformity with the intent

ACTING CITY CLERK

and purpose of this code. The building official is authorized to promulgate, adopt and issue the following rules:

1. "Building Construction Standards" to promulgate standards which are acceptable as a method or as an alternative design for meeting code-required performance criteria, to recognize new technical data affecting code requirements and to eliminate conflicts among code requirements.
2. "Code Interpretations" to interpret and clarify conditions or language expressed in this code.
3. Any other rule necessary for the administration of the purpose and intent of this code.

104.17.2 Procedure for Adoption of Rules. The building official shall promulgate, adopt and issue rules according to the procedures as specified in Chapter 3.02 of the Administrative Code, Seattle Municipal Code.

104.18 Appeals. Appeals from decisions or actions pertaining to the administration and enforcement of this code shall be addressed to the building official. The appellant may request a review by three or more members of the Construction Codes Advisory Board, convened by the Chair. The issue of the appeal shall be taken into account by the Chair when selecting members to hear an appeal. The results of this appeal shall be advisory only.

SECTION 105

CONSTRUCTION CODES ADVISORY BOARD

105.1 Establishment. There is hereby created a "Construction Codes Advisory Board" ("Board") to consist of 13 voting members, appointed by the Mayor and subject to confirmation by the City Council. The Board membership shall consist of one representative of each of the following professions or organizations. The representative of a profession need not

ACTING CITY CLERK

be a member of the profession but may be a representative of an organization of such professionals.

1 architect;

1 structural engineer;

1 electrical engineer;

1 heating, refrigeration and air-conditioning engineer;

1 general contractor;

1 electrical contractor;

1 commercial building owner or operator;

1 apartment building owner or operator;

1 developer and/or contractor of residential projects;

1 member of organized labor; and

3 members of the general public.

A representative of each of the following departments shall be ex officio, non-voting members of the Board:

Seattle Fire Department;

Seattle City Light; and

Seattle-King County Department of Public Health.

105.2 Duties of Board.

105.2.1 General. The Board shall act in an advisory capacity for all of its duties. The Board shall meet on call either by the building official or the Board Chair, subject to timely notice.

105.2.2 Code Adoption and Amendment. The Board may examine proposed new editions and amendments to the following codes and regulations:

Seattle Building Code - Chapter 22.100 SMC*

ACTING CITY CLERK

Seattle Residential Code – Chapter 22.150 SMC

Seattle Mechanical Code - Chapter 22.400 SMC

Seattle Fuel Gas Code - Chapter 22.420 SMC

Seattle Boiler Code - Chapter 22.450 SMC

Seattle Energy Code - Chapter 22.700 SMC

Seattle Electrical Code - Chapter 22.300 SMC

Building Code-related provisions of the Housing and Building Maintenance Code - Chapter 22.206.

* SMC is the Seattle Municipal Code.

The Board may make recommendations to the building official and to the City Council for adoption and amendment of these codes.

105.2.3 Review of Director's Rules. The Board may examine proposed administrative rules relating to the codes and regulations listed above and make recommendations to the building official.

105.2.4 Appeals. The Board shall serve as an advisory hearing body for appeals sought under Section 104.18 of the Seattle Building Code, Section 104.14 of the Seattle Residential Code, Section 110 of the Seattle Mechanical Code, Section 110 of the Seattle Fuel Gas Code, and Section 208 of the Seattle Electrical Code. The final decision on any appealable matter shall be made by the building official.

105.3 Organization. The Board shall organize, elect a chair and any other officers as may be established by the Board. The Board may adopt rules of procedure. There shall be a committee of the Board for each code assigned to its review. Committees shall consist of Board members and may include additional members such as representatives of the general public and professions not specifically represented on the Board. Non-Board members of

ACTING CITY CLERK

committees shall be appointed by the Chair. The Chair may, from time to time, appoint special topic subcommittees.

105.4 Terms of Service. Terms of Board members are three years dating from the day of expiration of the preceding term; provided, a member whose term has expired shall continue to serve until a successor is appointed and confirmed. Terms on the Board shall be staggered so that the terms of not more than 5 positions expire concurrently. Vacancies shall be filled for any unexpired term in the same manner as original appointment.

105.5 Removal of Board Member. A member may be removed by the Mayor, subject to a vote of a majority of members of the City Council.

105.6 Compensation of Board Members. No member shall receive any compensation for service on the Board.

SECTION 106

BUILDING PERMITS

106.1 Permits Required. It is unlawful to erect, construct, enlarge, alter, repair, move, improve, remove, change the occupancy of, or demolish any building or structure in the City, or allow the same to be done, without first obtaining a building permit for each such building or structure from the building official. All work shall comply with this code, even where no permit is required.

106.2 Work Exempt from Permit. A building permit shall not be required for the work listed below. Exemption from the permit requirements of this code shall not be deemed to grant authorization for any work to be done in any manner in violation of the provisions of this code or any other laws or ordinances of the City.

1. Minor repairs or alterations which, as determined by the building official, cost the owner $4,000 or less in any 6-month period. Such repairs and alterations shall not

ACTING CITY CLERK

include the removal, reduction alteration, or relocation of any loadbearing support. Egress, light, ventilation, and fire-resistance shall not be reduced.

2. Miscellaneous work including the following, provided no changes are made to the building envelope: patio and concrete slabs on grade, painting or cleaning a building, repointing a chimney, installing kitchen cabinets, paneling or other surface finishes over existing wall and ceiling systems applied in accordance with Sections 801-805, insulating existing buildings, abatement of hazardous materials, demolition of nonstructural interior tenant improvements in retail and office uses, and in-kind or similar replacement of or repair of deteriorated members of a structure.
3. One-story detached accessory buildings used for greenhouse, tool or storage shed, playhouse, or similar uses, provided:
    - 3.1 The projected roof area does not exceed 120 square feet; and
    - 3.2 The building is not placed on a concrete foundation other than a slab on grade.
4. Fences not over 8 feet high which do not have masonry or concrete elements above 6 feet.
5. Arbors and other open-framed landscape structures not exceeding 120 square feet in projected area.
5. Cases, counters and partitions not over 5 feet 9 inches high.
6. Retaining walls and rockeries which are not over 4 feet in height measured from the bottom of the footing to the top of the wall, provided:
    - 6.1 There is no surcharge or impoundment of Class I, II or III-A liquids.
    - 6.2 Construction is not in a critical area or an environmentally sensitive area, nor supports soils in areas of geologic hazard, steep slope or having landslide potential as identified in the environmentally sensitive and critical area

ACTING CITY CLERK

regulations contained in Chapters 25.05 and 25.09 of the Seattle Municipal Code.

6.3 Possible failure would likely cause no damage to adjoining property or structures.

7. Platforms, walks and driveways not more than 18 inches above grade and not over any basement or story below.
8. Temporary motion picture, television and theater stage sets and scenery.
9. Window awnings supported by an exterior wall of Group R, Division 3, and Group U Occupancies when projecting not more than 54 inches.
10. Prefabricated swimming pools, spas and similar equipment accessory to a Group R, Division 3 occupancy in which the pool walls are entirely above the adjacent grade and if the capacity does not exceed 5,000 gallons.
11. Replacement of roofing materials and siding. This shall not include structural changes, replacement of sheathing or alterations to doors and windows. In single-family dwelling reroofing projects, the existing roof sheathing may be replaced and roof structure may be repaired without permit provided no changes are made to the building envelope other than adding or replacing insulation, and the work is equivalent or better than the existing structure. See Energy Code Sections 101.3.2.5 and 1132.1 for insulation requirements for existing buildings.
12. School, park or private playground equipment including playhouses and tree houses.
13. Removal and/or replacement of underground storage tanks that are subject to regulation by a state or federal agency.

Note: A Fire Department permit is required for removal, replacement and decommissioning of underground storage tanks.

ACTING CITY CLERK

14. Installation of dish and panel antennas 6.56 feet (2 m) or less in diameter or diagonal measurement.

106.3 Other Permits Required. Unless otherwise exempted by this or other pertinent codes, separate master use, plumbing, electrical and mechanical permits shall be required for the above exempted items.

106.4 Flood Hazard Areas. In addition to the permit required by this section, all work to be performed in areas of special flood hazard, as identified in the report entitled "Flood Insurance Study for King County, Washington and Incorporated Areas" and the accompanying Flood Insurance Rate Maps and filed in C.F. 295948, is subject to additional standards and requirements, including floodplain development approval or a Floodplain Development License, as set forth in Chapter 25.06, the Seattle Floodplain Development Ordinance.

106.5 Application for Permit

106.5.1 Application. To obtain a permit, the applicant shall first file an application in writing on a form furnished by the Department of Planning and Development for that purpose. Every such application shall:

1. Identify and describe the work to be covered by the permit for which application is made.
2. Describe the land on which the proposed work is to be done by legal description, property address or similar description that will readily identify and definitely locate the proposed building or work.
3. Provide contractor's business name, address, phone number and current contractor registration number (required if contractor has been selected).
4. Be accompanied by plans, and other data as required in Section 106.5.2.

ACTING CITY CLERK

5. State the valuation of any new building or structure or any addition, remodeling or alteration to an existing building including cost breakdown between additions and alterations.
6. Be signed by the owner of the property or building, or his/her authorized agent who may be required to submit evidence to indicate such authority.
7. Give such other data and information as may be required by the building official, including, but not limited to, master use and shoreline permits and building identification plans.
8. Indicate the name of the owner and contractor and the name, address and phone number of a contact person.
9. Substantially conform with the Land Use Code, critical areas regulations and building code regulations in effect on the date that the application is submitted.

106.5.2 Plans and Specifications.

106.5.2.1 General. Plans, calculations, diagrams and other data shall be submitted in two or more sets with each application for a permit. Computations, stress diagrams, shop and fabrication drawings and other data sufficient to show the adequacy of the plans shall be submitted when required by the building official.

EXCEPTION: The building official may waive the submission of plans, calculations, diagrams and other data, if he/she finds that the nature of the work applied for is such that reviewing of plans is not necessary to obtain compliance with this code.

106.5.2.2 Preparation by Licensed Professionals. Plans, computations and specifications for all work shall be prepared and designed by or under the direct supervision of an architect or structural engineer licensed to practice under the laws of the State of Washington. Plans and specifications for work not involving structural

ACTING CITY CLERK

design shall be prepared by a professional engineer or architect qualified in the proposed work. Each sheet of plans shall bear the seal and the signature of the licensee.

EXCEPTION: When authorized by the building official, plans and specifications need not be prepared by an engineer or architect licensed by the State of Washington for the following:

1. One- and two-family dwellings.
2. New buildings or structures, and additions, alterations or repairs of conventional light frame construction, having a total valuation of less than $30,000.
3. Nonstructural alterations and repairs having a total valuation of less than $30,000, excluding electrical and mechanical systems, fixtures, equipment, interior finish and millwork.
4. The building official may accept the design of a licensed professional engineer for assembly line products or designed specialty structural products.
5. Other work as specified in rules promulgated by the Director.

106.5.2.3 Clarity of Plans. Plans shall be drawn to a clearly indicated and commonly accepted scale upon substantial paper such as blueprint quality or standard drafting paper. Tissue paper, posterboard or cardboard will not be accepted. The plans shall be of microfilm quality and limited to a minimum size of 18 inches by 18 inches and a maximum size of 41 inches by 54 inches.

EXCEPTION: The plans for metal plate connected wood trusses may be not less than 8-1/2 inches by 11 inches for single family structures and no less than 11 inches by 17 inches for all other structures.

ACTING CITY CLERK

106.5.2.4 Information Required on Plans. Plans shall include the following, as applicable:

1. A plot plan showing the width of streets, alleys, yards and courts.
2. The location (and/or location within a building), floor area, story, height, type of construction and occupancy classification as defined by the Building Code and use as defined by the Land Use Code of the proposed building and of every existing building on the property.
3. Where there are more than two buildings located on a property, a building identification plan identifying the location of each building on the property and identifying each building by a numbering system unrelated to address. Such plan shall not be required where a plan for the site is already on file and no new buildings are being added to the site.
4. Types of heating and air conditioning systems.
5. Architectural plans, including floor plans, elevations and door and finish schedules showing location of all doors, windows, mechanical equipment, shafts, pipes, vents and ducts.
6. Structural plans, including foundation plan and framing plans.
7. Cross-sections and construction details for both architectural and structural plans including wall sections, foundation, floor and roof details, connections of structural members and types of construction material.
8. Topographic plans, including original and final contours, location of all buildings and structures on and, when required by the building official, adjacent to the site, and cubic yards of cut and fill.

A survey of the property prepared by a land surveyor licensed by the State of Washington shall be required for all new construction, and for additions or accessory

ACTING CITY CLERK

buildings where the building official has reason to believe that there may be an intrusion into required open areas or over the property line.

9. Where any building or structure is to be erected or constructed on property abutting an unimproved or partially improved street or alley, such plans shall also include a profile showing the established or proposed grade of such street or alley, based upon information obtained from the Director of Transportation relating to the proposed finished elevations of the property and improvements thereon.

106.5.2.5 Information on First Sheet. The first or general note sheet of each set of plans shall specify the following, as applicable:

1. The building and street address of the work.
2. The name and address of the owner and person who prepared the plans.
3. Legal description of the property.
4. Type of occupancy of all parts of the building as defined in this code including notation of fixed fire protection devices or systems.
5. Zoning classification of the property and existing and proposed uses of the structure as defined in the Land Use Code.
6. Indication of location within the fire district as defined in this code, if applicable.
7. Type of construction as defined in this code.
8. Number of stories and basements as defined in this code.
9. Variances, conditional uses, special exceptions, including project numbers, approval and approval extension dates.
10. Where applicable, a description of the design selected and approved at a Section 403 highrise building pre-design conference, a Section 404 atrium pre-design

ACTING CITY CLERK

conference, a Section 414.1.4 hazardous occupancy pre-design conference, a Section 1614.6 seismic design pre-design conference or a similar conference on a building subject to Fire Code Chapter 93.

106.5.2.6 Structural Notes. Plans submitted for buildings with an occupant load of 50 or more, buildings of more than two stories, buildings of more than 4,500 square feet total floor area or buildings or other structures that are determined by the building official to embody hazards or complex structural concepts shall include applicable information including, but not limited to, the following:

1. Design loads: Snow load, live loads and lateral loads.

When required by the building official, the structural notes for plans engineered to Chapter 9 of ASCE 7 shall include the factors of the base shear formula used in the design;

2. Foundations: Foundation investigations, allowable bearing pressure for spread footings, allowable load capacity of piles, lateral earth pressure;
3. Masonry: Type and strength of units, strength or proportions of mortar and grout, type and strength of reinforcement, method of testing, design strength;
4. Wood: Species or species groups, and grades of sawn lumber, glued-laminated lumber, plywood and assemblies, type of fasteners;
5. Concrete: Design strengths, mix designs, type and strength of reinforcing steel, welding of reinforcing steel, restrictions, if any;
6. Steel and aluminum: Specification types, grades and strengths, welding electrode types and strengths;
7. Assignment of responsibilities for inspection and testing during construction, and the degree of inspection and testing;

ACTING CITY CLERK

In lieu of detailed structural notes the building official may approve minor references on the plans to a specific section or part of this code or other ordinances or laws.

106.5.2.7 Fire-resistive Notes. The building official may require that plans for buildings more than two stories in height of other than Groups R, Division 3 and U Occupancies indicate how required structural and fire-resistive integrity will be maintained where a penetration will be made for electrical, mechanical, plumbing and communication conduits, pipes and similar systems.

The building official may require that, when required for fire-resistive construction, the method of installation of wall and ceiling coverings and the protection of structural parts be specified on the plans unless the listing which documents the rating specifies a method no more restrictive than the minimum standards of Chapter 7.

106.5.3 Construction Inspection Notes. The engineer or architect of record shall include in the final permit documents the following:

1. Special inspections required by Section 1704.
2. Other structural inspections required by the engineer or architect of record.

106.6 Permit Issuance

106.6.1 General. The application, plans, specifications and other data filed by an applicant for permit shall be reviewed by the building official. Such plans may be reviewed by other departments of the City to check compliance with the laws and ordinances under their jurisdiction. The building official shall mail notice to or otherwise notify the applicant within twenty-eight days of application if additional information is required and what additional information is required before the application will be complete. Within fourteen days of receiving the additional information, the building official shall notify the applicant in writing whether the application is now complete or what additional information is

ACTING CITY CLERK

necessary. An application shall be deemed to be complete if the building official does not notify the applicant in writing by the deadlines in this section that the application is incomplete. The Director shall approve, condition or deny the application within 120 days. If the building official finds that the work as described in an application for permit and the plans, specifications and other data filed therewith substantially conforms to the requirements of this code and other pertinent laws and ordinances and that the fees specified in the Fee Subtitle have been paid, he/she shall issue a permit therefor to the applicant who becomes the permit holder or authorized agent.

EXCEPTIONS:

1. The building official may issue a permit for the construction of part of a building or structure before complete plans for the whole building or structure have been submitted or approved, provided that the proposed project complies with the State Environmental Policy Act as adopted by the City (Chapter 25.05 Seattle Municipal Code) and as amended and the Land Use Code, as amended; and provided further that adequate information and plans have been filed and checked to assure compliance with all pertinent requirements of this and other pertinent codes. The holder of such a permit shall proceed at his/her own risk without the assurance that the permit for the entire building or structure will be granted.
2. After approval of a Master Use Permit as required by the Land Use Code, a permit for excavation may be issued.

The building official may condition a permit where he/she determines that risks associated with development, construction, ownership and occupation in areas of the city, including, but not limited to potential slide areas, can be reduced to an acceptable level.

ACTING CITY CLERK

The building official may deny such permit where he/she determines that the risks cannot be reduced to an acceptable level.

106.6.2 Compliance with Approved Plans and Permit. When the building official issues a permit, he/she shall endorse the permit in writing and endorse in writing or stamp the plans **APPROVED.** Such approved plans and permit shall not be changed, modified or altered without authorization from the building official, and all work shall be done in accordance with the approved plans and permit except as the building official may require during field inspection to correct errors or omissions.

106.6.3 Amendments to the Permit. When substitutions or changes are made during construction, approval shall be secured prior to execution, however, the building inspector may approve minor modifications to the plans for work not reducing the structural strength or fire and life safety of the structure. The building inspector shall determine if it is necessary to revise the approved plans. Substitutions or changes made during construction subject to special inspection required by Section 1704 shall be approved by the building official. Substitutions, changes and clarifications shall be shown on two sets of plans which shall be submitted to and approved by the building official, accompanied by fees specified in the Fee Subtitle prior to occupancy. These substitutions and changes shall conform to the requirements of this code and other pertinent laws and ordinances.

106.6.4. Cancellation of Permit Application. Applications may be cancelled if no permit is issued by the earlier of the following: (1) within twelve months following the date of application; or (2) within sixty days from the date of written notice of approval for issuance. Plans and other data submitted for review may thereafter be returned to the applicant or destroyed by the building official.

The building official shall notify the applicant in writing at least thirty days before the application is cancelled. The notice shall specify a date by which a request for extension

ACTING CITY CLERK

must be submitted. The date shall be at least two weeks prior to the date on which the application will be cancelled.

At the discretion of the building official, applications for projects that require more than twelve months to complete may be extended for a period that provides reasonable time to complete the work, but in no case longer than twenty-four months from the date of application. No application shall be extended more than once. In order to renew action on an application after cancellation, the applicant shall submit a new application and pay a new fee.

Notwithstanding other provisions of this code, applications may be extended where issuance of the permit is delayed by litigation, preparation of environmental impact statements, appeals, strikes or other causes related to the application that are beyond the applicant's control, or while the applicant is making progress toward issuance of a master use permit.

See the Fee Subtitle for fee refunds.

106.7 Retention of Plans. One set of approved plans, which may be on microfilm, shall be retained by the building official. One set of approved plans shall be returned to the applicant and shall be kept at the site of the building or work at all times during which the work authorized is in progress for use by the inspection personnel.

106.8 Validity of Permit. The issuance or granting of a permit or approval of plans shall not be construed to be a permit for, or an approval of, any violation of any of the provisions of this code or other pertinent laws and ordinances. No permit presuming to give authority to violate or cancel the provisions of this code shall be valid, except insofar as the work or use which it authorizes is lawful.

The issuance of a permit based upon plans shall not prevent the building official from thereafter requiring the correction of errors in said plans or from preventing building operations

ACTING CITY CLERK

being carried on thereunder when in violation of this code or of other pertinent laws and ordinances of the City.

The issuance of a building permit shall not prevent the building official from requiring correction of conditions found to be in violation of this code or other pertinent laws and ordinances of the City, nor shall the period of time for which any such permit is issued be construed to extend or otherwise affect any period of time for compliance specified in any notice or order issued by the building official or other administrative authority requiring the correction of any such conditions.

106.9 Expiration and Renewal.

106.9.1 Expiration. Permits and renewed permits shall expire eighteen months from the date of issuance.

EXCEPTIONS:

1. Initial permits for major construction projects that require more than eighteen months to complete, according to a construction schedule submitted by the applicant, may be issued for a period that provides reasonable time to complete the work but in no case longer than three years.
2. Permits which expire in less than eighteen months may be issued where the building official determines a shorter period is appropriate.

106.9.2 Renewal. Permits may be renewed and renewed permits may be further renewed by the building official provided the following conditions are met:

1. Application for renewal shall be made within the thirty-day period immediately preceding the date of expiration of the permit; and
2. If the permit has had an associated discretionary Land Use review,
   (a) the Land Use application was approved for issuance five years or less before the date of the application for renewal; or

ACTING CITY CLERK

(b) the work authorized by the permit has been started and is substantially underway. "Substantially underway" means that work such as excavation, inspections, and installation of framing, electrical, mechanical and finish work is being completed on a continuing basis.

3. If an application for renewal is made either more than eighteen months after the date of mandatory compliance with a new or revised edition of the building code or after the effective date of an amendment to applicable provisions of the Land Use Code or the Regulations for Environmentally Critical Areas, the permit shall not be renewed unless:

3.1 The building official determines that the permit complies, or is modified to comply, with the code or codes in effect on the date of application renewal; or

3.2 The work authorized by the permit is substantially underway and progressing at a rate approved by the building official. "Substantially underway" means that work such as excavation, inspections, and installation of framing, electrical, mechanical and finish work is being completed on a continuing basis.

Permits may also be renewed where commencement or completion of the work authorized by the permit is delayed by litigation, appeals, strikes or other causes related to the work authorized by the permit, beyond the permit holder's control.

Note: In addition to satisfying the provisions of this section, an applicant seeking to renew a building permit for new or additional development in a landslide-prone area, as described in the Environmentally Critical Areas (ECA) Ordinance, (SMC 25.09), must satisfy Section 25.09.345 of the ECA Ordinance, Permit Renewals in Landslide-prone Areas.

ACTING CITY CLERK

106.9.3 Reestablishment. A new permit shall be required to complete work where a permit has expired and was not renewed.

EXCEPTION: A permit which has been expired for less than one year may be reestablished upon approval of the building official provided it complies with Section 106.9.2, Items 2 and 3 above.

106.9.4 Suspension or Revocation. The building official may, by written order, suspend or revoke a permit issued under the provisions of this code whenever the permit is issued in error or on the basis of incorrect information supplied, or in violation of any ordinance or regulation or any provisions of this code.

106.10 Permits and Certificates of Occupancy for Temporary Structures.

106.10.1 Tents and Similar Facilities. The building official may issue a nonrenewable permit and certificate of occupancy to erect and maintain for a period not to exceed six months, a tent or other temporary structure to be used for religious services, conventions, circuses, carnivals, fairs, special sales or similar uses.

Exception: Authority to issue permits is vested with the Fire Department for temporary tents and canopies meeting all of the following conditions:

1. The permit is for less than 4 weeks;
2. The temporary structure will be located 200 feet or more from shorelines;
3. No stage, platform, bleacher or similar structure greater than 4 feet in height will be installed inside any temporary structure;
4. No temporary structure will be attached to a building or other permanent structure for support;
5. The temporary permit does not propose foul-weather use, or a structure of unusual shape, unusual location or large area or height.

ACTING CITY CLERK

Such structures shall be removed before the expiration of the six-month period specified on the certificate of occupancy. Removal shall be guaranteed by a cash deposit with the building official or by a surety bond, the amount of which, in either case, shall be fixed by the building official.

Note: The Land Use and Fire codes may impose additional restrictions on tents and temporary structures.

The conditions relative to the cash deposit or the bond shall be such that in case of failure of the occupant or owner to conform to any of the lawful requirements of the City relative to erection, maintenance or removal of said tent or other structure, the properly authorized officers of the City may enter the premises and take such steps as are necessary to conform to such lawful requirements, and shall recover the cost thereof from the cash deposit or bond.

The construction of the structure shall be subject to reasonable safeguards for the persons and property as the building official shall prescribe. The nature and extent of fire-extinguishing equipment and decorations shall be subject to the requirements of the fire chief, and the sanitary facilities shall meet the requirements of the Director of Public Health.

106.10.2 Temporary Structures. Temporary structures such as reviewing stands and other miscellaneous structures conforming to the requirements of this code, and sheds, canopies, or fences used for the protection of the public around and in conjunction with construction work may be erected by special permit from the building official for a limited period of time and such building or structure shall be subject to the bonding, removal and safety provisions noted in Section 106.10.1. Temporary buildings or structures in the right-of-way shall be regulated by the Director of Transportation.

ACTING CITY CLERK

106.10.3 Temporary Office Trailers. The building official may issue a building/use permit and certificate of occupancy for eighteen months for the installation of a Commercial Coach or Modular Home as a temporary office or other uses as may be determined by the building official, subject to the following:

1. The Commercial Coach shall be identified by a State of Washington black sticker located by the door. The structure may be placed on a temporary foundation and shall be anchored to resist wind and seismic lateral forces.
2. The Modular Home shall be identified by a State of Washington gold sticker located by the door. It will be accepted as long as no heavy storage is anticipated for the temporary office use. The structure may be placed on a temporary foundation and shall be anchored to resist wind and seismic lateral forces.
3. A plot plan shall be submitted to verify compliance with the Land Use Code and to check exposure to other buildings.
4. The proposed use must be permitted outright under the Land Use Code and comply with all other pertinent laws and ordinances.
5. Construction offices shall be regulated by Section 106.10.4.

A subsequent permit and certificate of occupancy for another eighteen months may be issued at the end of each eighteen-month period if the building official determines that the trailer complies with this section.

106.10.4 Construction Buildings. The building official may issue a permit to erect and maintain construction offices, dry shacks and similar temporary buildings, including material and equipment storage, all for the purpose of constructing an improvement.

EXCEPTION: Construction offices and similar temporary buildings located on the same premises for which a construction permit has been issued, do not require an additional temporary permit.

ACTING CITY CLERK

Such structures shall be removed within 14 days after the termination of the permit, and such removal shall be guaranteed by a cash deposit with the building official or by a surety bond, the amount of which, in either case, shall be fixed by the building official.

The conditions relative to the cash deposit or the bond shall be such that in case of failure of the occupant or owner to conform to any of the lawful requirements of the City relative to erection, maintenance or removal of said construction offices, dry shacks or similar temporary buildings, the properly authorized officers of the City may enter the premises and take such steps as are necessary to conform to such lawful requirements, and shall recover the cost thereof from the cash deposit or bond.

The construction of the structure shall be subject to reasonable safeguards for persons and property as the building official shall prescribe; the nature and extent of fire-extinguishing equipment shall be subject to the requirements of the fire chief, and the sanitary facilities shall meet the requirements of the Director of Public Health.

SECTION 107

FEES

A fee for each building permit and for other activities related to the enforcement of this code shall be paid as set forth in the Fee Subtitle.

SECTION 108

INSPECTIONS

108.1 General. All construction or work for which a permit is required is subject to inspection by the building official, and certain types of construction shall have special inspections by registered special inspectors as specified in Section 1704.

ACTING CITY CLERK

A survey of the lot may be required by the building official to verify compliance of the structure with approved plans.

108.2 Inspection Requests. It is the duty of the owner of the property or his/her authorized agent, or the person designated by the owner/agent to do the work authorized by a permit, to notify the building official that work requiring inspection as specified in this section and Section 1704 is ready for inspection.

It is the duty of the person requesting any inspections required by this code to provide access to and means for proper inspection of such work. It is the duty of the permit holder to cause the work to be accessible and exposed for inspection purposes until approved by the building official. Neither the building official nor the City shall be liable for expense entailed in the required removal or replacement of any material to allow inspection.

108.3 Inspection Record. Work requiring a permit shall not be commenced until the permit holder or his/her agent has posted an inspection record in a conspicuous place on the premises and in a position which allows the building official to conveniently make the required entries thereon regarding inspection of the work. This record shall be maintained in such a position by the permit holder until final approval has been granted by the building official.

108.4 Approvals Required. No work shall be done on any part of the building or structure beyond the point indicated in each successive inspection without first obtaining the written approval of the building official. Such written approval shall be given only after an inspection has been made of each successive step in the construction as indicated by each of the inspections required in Section 108.5.

There shall be a final inspection and approval of all buildings when completed and ready for occupancy.

Approval as a result of an inspection shall not be construed to be an approval of a violation of the provisions of this code or of other pertinent laws and ordinances of the City. Inspections

ACTING CITY CLERK

presuming to give authority to violate or cancel the provisions of this code or of other pertinent laws and ordinances of the City shall not be valid.

108.5 Required Inspections.

108.5.1 General. No required reinforcing steel or structural framework of any part of any building or structure shall be covered or concealed in any manner whatsoever without first obtaining the approval of the building official.

EXCEPTION: Modular homes and commercial coaches identified by State of Washington stickers as specified in Section 106.10.3 and placed upon a permanent foundation approved and inspected by the building official.

The building official, upon notification by the permit holder or his/her agent, of the property address and permit number, shall make the following inspections and shall either approve that portion of the construction as completed or shall notify the permit holder or his/her agent where the construction fails to comply with the law.

108.5.2 Site Inspection: To be made at the time land-disturbing activity begins, following installation of erosion control measures and fencing of required slope, riparian or other buffer delineations which may restrict land disturbance.

Note: The purpose of the site inspection is to verify the erosion control method, location and proper installation. Approved drainage plan requirements and site plan conditions will also be verified, including buffer delineations.

108.5.2 Foundation Inspection: To be made after trenches are excavated and forms erected and when all materials for the foundation are delivered on the job. Where concrete from a central mixing plant (commonly termed "ready mix") is to be used, materials need not be on the job.

108.5.3 Concrete Slab or Under-floor Inspection: To be made after all in-slab or under-floor building service equipment, conduit, piping accessories and other ancillary equipment

ACTING CITY CLERK

items are in place but before any concrete is poured or floor sheathing installed, including the subfloor.

108.5.4 Frame Inspection: To be made after the roof, all framing, fire-blocking and bracing are in place and all pipes, chimneys and vents are complete and the rough electrical, plumbing, and heating wires, pipes and ducts are approved.

108.5.5 Insulation Inspection: To be made after all insulation and vapor barriers are in place but before any gypsum board or plaster is applied.

108.5.6 Lath and/or Gypsum Board Inspection: For shear walls, to be made after lathing and/or gypsum board, interior and exterior, is in place, but before any plastering is applied or before gypsum board joints and fasteners are taped and finished.

108.5.7 Final Inspection: To be made after finish grading and the building is completed and before occupancy.

108.6 Special Inspections. For special inspections, see Chapter 17.

108.7 Other Inspections. In addition to the called inspections specified above, the building official may make or require any other inspections of any construction work to ascertain compliance with the provisions of this code and other pertinent laws and ordinances which are enforced by the building official.

Where work, for which any permit or approval is required, is commenced or performed prior to making formal application and receiving the building official's permission to proceed, the building official may make a special investigation inspection before a permit may be issued for such work. Where a special investigation is made, a special investigation fee may be assessed in accordance with the Fee Subtitle.

108.8 Reinspections. The building official may require a reinspection when work for which inspection is called is not complete, corrections called for are not made, the inspection record is not properly posted on the work site, the approved plans are not readily available to the

ACTING CITY CLERK

inspector, for failure to provide access on the date for which inspection is requested, or when deviations from plans which require the approval of the building official have been made without proper approval.

For the purpose of determining compliance with Section 3402, Maintenance, the building official or the fire chief may cause any structure to be reinspected.

The building official may assess a reinspection fee as set forth in the Fee Subtitle for any action listed above for which reinspection may be required. In instances where reinspection fees have been assessed, no additional inspection of the work shall be performed until the required fees have been paid.

SECTION 109

CERTIFICATE OF OCCUPANCY

109.1 Occupancy. No new building or structure shall be used or occupied, and no change in the existing occupancy classification of a building or structure, or portion thereof, shall be made until the building official has issued a Certificate of Occupancy therefor.

EXCEPTION: Group R-3, and Group U Occupancies provided buildings and structures of Group R-3 shall not be used or occupied until approved for occupancy after final inspection.

Issuance of a Certificate of Occupancy shall not be construed as an approval of a violation of the provisions of this code or other pertinent laws and ordinances of the City. Certificates presuming to give authority to violate or cancel the provisions of this code or of other pertinent laws and ordinances of the City shall not be valid.

109.2 Change in Occupancy. Changes in the occupancy of a building shall not be made except as specified in Section 3405 of this code.

ACTING CITY CLERK

109.3 Certificate Issued. After satisfactory completion of inspections, when it is found that the building or structure requiring a Certificate of Occupancy complies with the provisions of this code, the Fire Code and other pertinent laws and ordinances of the City, the building official shall issue a Certificate of Occupancy which shall contain the following information:

1. The building permit number;
2. The address of the building;
3. A description of that portion of the building for which the certificate is issued;
4. A statement that the described portion of the building complies with the requirements of this code for group and division of occupancy and the activity for which the proposed occupancy is classified; and
5. The name of the building official.

109.4 Temporary Certificate. A Temporary Certificate of Occupancy may be issued by the building official for the use of a portion, or portions, of a building or structure prior to the completion of the entire building or structure provided all devices and safeguards for fire protection and life safety, as required by this code, the Fire Code, and other pertinent laws and ordinances of the City, are maintained in a safe and usable condition. See Section 106.10 for Certificates of Occupancy for temporary structures.

109.5 Posting. A Certificate of Occupancy shall be posted in a conspicuous place on the premises and shall not be removed except by the building official.

109.6 Revocation. The building official may, in writing, suspend or revoke a Certificate of Occupancy issued under the provisions of this code whenever the certificate is issued in error, or on the basis of incorrect information supplied, or when it is determined that the building or structure or portion thereof is in violation of any pertinent laws or ordinances of the City or any of the provisions of this code.

ACTING CITY CLERK

Section 4. Subsection 201.3 of the International Building Code, 2003 Edition, is amended as follows:

201.3 Terms defined in other codes. Where terms are not defined in this code and are defined in the *International Fuel Gas Code, International Fire Code, International Mechanical Code* or ((~~*International*~~)) *Uniform Plumbing Code,* such terms shall have the meanings ascribed to them as in those codes.

Section 5. Subsection 201.5 of the International Building Code, 2003 Edition, is amended as follows:

201.5 References to Other Codes. Whenever an International, National or Uniform Code is referenced in this code, it shall mean the Seattle edition of that code, including local amendments. References to the "Building Code", "Fire Code", "Mechanical Code" and "Plumbing Code" mean the Seattle editions of those codes.

Section 6. Section 202 of the International Building Code, 2003 Edition, is amended as follows:

The following terms and definitions are added and amended:

[W] ADULT FAMILY HOME. See Section 310.2.

ARCHITECT. See "project architect or engineer."

AWNING. ((~~An architectural projection that provides weather protection, identity or decoration and is wholly supported by the building to which it is attached. An awning is comprised of a lightweight, rigid skeleton structure over which a covering is attached.~~)) See Section 3105.2

AWNING SIGN See Section 3105.2

BILLBOARD. See Section 3107.3.

BUILDING FACADE. See Section 3107.3.

ACTING CITY CLERK

BUILDING FAÇADE FACING. See Section 3107.3.

BUILDING OFFICIAL. The officer or other designated authority charged with the administration and enforcement of this code, or a duly authorized representative.

Interpretation I202B: BUILDING OFFICIAL is the Director of the Department of Planning and Development. As used in this code, the term includes authorized representatives of the Director of the Department of Planning and Development.

BUILDING PERMIT APPLICATION, FULLY COMPLETE, is an application which the building official has judged to meet the requirements of Section 106.5. It is the application for all the architectural and structural parts of a building, except when the building official allows application for portions of buildings the application shall be at least the complete structural frame.

BULLETIN BOARD. See Section 3107.3.

CANOPY. ((~~An architectural projection that provides weather protection, identity or decoration and is supported by the building to which it is attached and at the outer end by not less than one stanchion. A canopy is comprised of a rigid structure over which a covering is attached.~~)) See Section 3105.2

[W] CHILD DAY CARE. See Section 310.2.

[W] CHILD DAY CARE HOME, FAMILY. See Section 310.2.

CLOSED CIRCUIT TELEPHONE. See Section 1102.1

CONTRACT DOCUMENTS are those design drawings, written specifications, letters, sketches and other documents that fully define the work to be constructed.

COVERED BOAT MOORAGE See Section 421.1.2.

DESIGNATED AREAS. See Section 1204.2.1

DIRECTOR. See "building official."

DISPLAY SURFACE. See Section 3107.3.

ACTING CITY CLERK

DOCK. See Section 421.1.2.

ELECTRIC SIGN. See Section 3107.3.

EMERGENCY POWER SYSTEM means electrical systems that comply with Seattle Electrical Code Article 700.

ENGINEER. See "project architect or engineer" and "structural engineer of record."

EXIT PLACARD. See Section 1002.1.

EXIT SIGN. See Section 1002.1.

FABRIC SIGN. See Section 3107.3.

FIRE DETECTION SYSTEM. See Section 902.

FIRE DISTRICT. See Section 401.2

FIRE-RETARDANT COVERING See Section 3105.2

JURISDICTION. The ((~~governmental unit that has adopted this code under due legislative authority~~)) City of Seattle.

LAND USE CODE is the Land Use Code, Title 23 of the Seattle Municipal Code, as amended.

LAND-DISTURBING ACTIVITY is any activity that results in a movement of earth, or a change in the existing soil cover (both vegetative and nonvegetative) or the existing topography. Land-disturbing activities include, but are not limited to, clearing, grading, filling, excavation or addition or replacement of impervious surface.

MAILBOXES. See Section 1102.1

MARQUEE. ((~~A permanent roofed structure attached to and supported by the building and that projects into the public right-of-way~~)) Marquees are a type of canopy. See Section 3105.2 for the definition of "canopy".

NONSTRUCTURAL TRIMS. See Section 3107.3.

ON-PREMISE DIRECTIONAL SIGN. See Section 3107.3.

ACTING CITY CLERK

ON-PREMISE SIGN. See Section 3107.3.

PIER. See Section 421.1.2.

[W] PORTABLE SCHOOL CLASSROOM. See Section 902.1.

PORTABLE SIGN. See Section 3107.3.

PRIVATE TRANSFORMER VAULT. See Section 422.2.

PROJECT ARCHITECT OR ENGINEER is the licensed architect or engineer who has been commissioned as the prime consultant, having overall responsibility for the design and the coordination of the design work of other consultants and whose seal is on the contract documents.

PROJECTING SIGN. See Section 3107.3.

RECYCLABLE MATERIALS. See Section 424.

((~~**RETRACTABLE AWNING.** See Section 3105.2.~~))

ROOF SIGN. See Section 3107.3.

SIGN. See Section 3107.3.

SIGN STRUCTURE. See Section 3107.3.

STANDBY POWER SYSTEM means an electrical power system that complies with Seattle Electrical Code Article 701 Legally Required Standby Systems.

STORY ABOVE GRADE PLANE. Any story having its finished floor surface entirely above grade plane, except that a basement shall be considered as a story above grade plane where the finished surface of the floor above the basement is:

1. More than 6 feet (1829 mm) above grade plane;
2. More than 6 feet (1829 mm) above the finished ground level for more than 50 percent of the total building perimeter; or
3. More than 12 feet (3658 mm) above the finished ground level ((~~at any point~~)) for more than 25 feet (7620 mm) of the perimeter. Required driveways up to 22 feet (6706 mm)

ACTING CITY CLERK

shall not be considered in calculating the 25 foot distance if there is at least 10 feet (3048 mm) between the driveway and all portions of the 25-foot area. See Figure 502.1.

STRUCTURAL ENGINEER OF RECORD is the engineer who has been commissioned to design the primary structure of the building. The structural documents prepared by, or under the supervision of, this engineer must contain his/her seal and are the structural contract documents used for the construction permit application.

STRUCTURALLY QUALIFIED PRODUCTS are products that have been pre-qualified by current acceptance and certification by an accepted authority such as International Code Council (ICC), American Society for Testing and Materials (ASTM), American Concrete Institute (ACI), American Institute of Steel Construction (AISC), or others widely accepted in the engineering field.

SUBSTANTIAL ALTERATION. See Section 3403.12.

SUBSTRUCTURE. See Section 421.1.2.

SUPERSTRUCTURE. See Section 421.1.2.

TRANSIENT LODGING. See Section 1102.1.

[F] USE (MATERIAL). See Section 415.2.

Interpretation I202U: USE, where otherwise mentioned in this code, is equivalent to character of occupancy and not intended to be construed as the definition of USE in the Land Use Code.

UTILITY TRANSFORMER VAULT. See Section 422.2.

WALL SIGN. See Section 3107.3.

WATERFRONT STRUCTURE. See Section 421.1.2.

WHARF OR QUAY. See Section 421.1.2.

ACTING CITY CLERK

Section 7. Table 302.1.1 of the International Building Code, 2003 Edition, is amended as follows:

TABLE 302.1.1

INCIDENTAL USE AREAS

ROOM OR AREA	SEPARATION[a]
Furnace room where any piece of equipment is over 400,000 Btu per hour input	1 hour or provide automatic fire-extinguishing system
Rooms with any boiler over 15 psi and 10 horsepower	1 hour or provide automatic fire-extinguishing system
Refrigerant machinery rooms	1 hour or provide automatic sprinkler system
Parking garage (Section 406.2)	2 hours; or 1 hour and provide automatic fire-extinguishing system
Hydrogen cut-off rooms	1-hour fire barriers and floor/ceiling assemblies in Group B, F, H, M, S and U occupancies. 2-hour fire barriers and floor/ceiling assemblies in Group A, E, I and R occupancies.
Incinerator rooms	2 hours and automatic sprinkler system
Paint shops, not classified as Group H, located in occupancies other than Group F	2 hours; or 1 hour and provide automatic fire-extinguishing system
Laboratories and vocational shops, not classified as Group H, located in Group E or I-2 occupancies	1 hour or provide automatic fire-extinguishing system
Laundry rooms over 100 square feet	1 hour or provide automatic fire-extinguishing

ACTING CITY CLERK

	system
Storage rooms over 100 square feet	1 hour or provide automatic fire-extinguishing system
Group I-3 cells equipped with padded surfaces	1 hour
Group I-2 waste and linen collection rooms	1 hour
Waste and linen collection rooms over 100 square feet	1 hour or provide automatic fire-extinguishing system
Stationary lead-acid battery systems having a liquid capacity of more than ((~~100~~)) 50 gallons used for facility standby power, emergency power or uninterrupted power supplies	1-hour fire barriers and floor/ceiling assemblies in Group B, F, H, M, S and U occupancies. 2-hour fire barriers and floor/ceiling assemblies in Group A, E, I and R occupancies

For SI: 1 square foot = 0.0929 m^2, 1 pound per square inch = 6.9 kPa, 1 British thermal unit = 0.293 watts, 1 horsepower = 746 watts, 1 gallon = 3.785 L.

a. Where an automatic fire-extinguishing system is provided, it need only be provided in the incidental use room or area.

Section 8. Subsection 302.3 of the International Building Code, 2003 Edition, is amended as follows:

302.3 Mixed occupancies. Where a building is occupied by two or more uses not included in the same occupancy classification, the building or portion thereof shall comply with Section 302.3.1 or 302.3.2 or a combination of these sections.

Exceptions:

1. Occupancies separated in accordance with Section 508.

ACTING CITY CLERK

2. Areas of Group H-2, H-3, H-4 or H-5 occupancies shall be separated from any other occupancy in accordance with Section 302.3.2.
3. Where required by Table 415.3.2, areas of Group H-1, H-2 or H-3 occupancy shall be located in a separate and detached building or structure.
4. Accessory use areas in accordance with Section 302.2.
5. Incidental use areas in accordance with Section 302.1.1.

[W] 6. Offices, mercantile, food preparation establishments for off-site consumption, personal care salons or similar uses in Group R dwelling units, which are conducted primarily by the occupants of a dwelling unit and are secondary to the use of the unit for dwelling purposes, and which do not exceed 500 square feet (46.4 m^2).

302.3.1 Nonseparated uses. Each portion of the building shall be individually classified as to use. The required type of construction for the building shall be determined by applying the height and area limitations for each of the applicable occupancies to the entire building. The most restrictive type of construction, so determined, shall apply to the entire building. All other code requirements shall apply to each portion of the building based on the use of that space except that the most restrictive applicable provisions of Section 403 and Chapter 9 shall apply to these nonseparated uses. Fire separations are not required between uses, except as required by other provisions.

302.3.2 Separated uses. Each portion of the building shall be individually classified as to use and shall be completely separated from adjacent areas by fire barrier walls or horizontal assemblies or both having a fire-resistance rating determined in accordance with Table 302.3.2 for uses being separated. Each fire area shall comply with this code based on the use of that space. Each fire area shall comply with the height limitations based on the use of that space and the type of construction classification. In each story, the building area shall

ACTING CITY CLERK

be such that the sum of the ratios of the floor area of each use divided by the allowable area for each use shall not exceed one.

Exceptions:

1. Except for Group H and I-2 areas, where the building is equipped throughout with an automatic sprinkler system, installed in accordance with Section 903.3.1.1, the fire-resistance ratings in Table 302.3.2 shall be reduced by 1 hour but to not less than 1 hour and to not less than that required for floor construction according to the type of construction.
2. No separation is required between Group A-2 or A-3 and Groups B or M occupancies when both are protected by an automatic sprinkler system.
3. Subject to the approval of the building official, opening protection in separations between parking areas and enclosed portions of buildings such as entry lobbies and similar areas may be waived provided:
   - 3.1. The floors of the enclosed building, where the opening protection is waived, are protected by an automatic sprinkler system;
   - 3.2. The openings are glazed with either tempered or laminated glazing materials;
   - 3.3. When required by the building official, the glazing is protected on the parking side with a sprinkler system designed to wet the entire glazed surface; and
   - 3.4. The parking areas are used primarily for passenger loading and unloading and vehicle drive-through uses.

Section 9 Subsection 305.2 of the International Building Code, 2003 Edition, is amended as follows:

ACTING CITY CLERK

305.2 Day care. The use of a building or structure, or portion thereof, for educational, supervision or personal care services for more than five children older than $2^1/_2$ years of age, shall be classified as a Group E occupancy.

[W] EXCEPTION: Family child day care homes licensed by the Washington State Department of Social and Health Services for the care of twelve or fewer children shall be classified as Group R-3.

Section 10. Subsection 307.9 of the International Building Code, 2003 Edition, is amended as follows:

[F] 307.9 Exceptions: The following shall not be classified ((~~in~~)) as Group H, but shall be classified ((~~in~~)) as the occupancy that they most nearly resemble. Hazardous materials in any quantity shall conform to the requirements of this code, including Section 414, and the *International Fire Code.*

1. Buildings and structures that contain not more than the maximum allowable quantities per control area of hazardous materials as shown in Tables 307.7(1) and 307.7(2) provided that such buildings are maintained in accordance with the *International Fire Code.*
2. Buildings utilizing control areas in accordance with Section 414.2 that contain not more than the maximum allowable quantities per control area of hazardous materials as shown in Tables 307.7(1) and 307.7(2).
3. Buildings and structures occupied for the application of flammable finishes, provided that such buildings or areas conform to the requirements of Section 416 and the *International Fire Code.*
4. Wholesale and retail sales and storage of flammable and combustible liquids in mercantile occupancies conforming to the *International Fire Code.*

ACTING CITY CLERK

5. Closed systems housing ((~~flammable or~~)) combustible liquids ((~~or gases~~)) utilized for the operation of machinery or equipment in accordance with the International Fire Code and rules promulgated by the building official and the fire code official for fuel storage in aboveground tanks.
6. Cleaning establishments that utilize combustible liquid solvents having a flash point of 140°F (60°C) or higher in closed systems employing equipment listed by an approved testing agency, provided that this occupancy is separated from all other areas of the building by 1-hour fire-resistance-rated fire barrier walls or horizontal assemblies or both.
7. Cleaning establishments which utilize a liquid solvent having a flash point at or above 200°F (93°C).
8. Liquor stores and distributors without bulk storage.
9. Refrigeration systems.
10. The storage or utilization of materials for agricultural purposes on the premises.
11. Stationary batteries utilized for facility emergency power, uninterrupted power supply or telecommunication facilities ((~~provided that the batteries are provided with safety venting caps and ventilation is provided~~)) in accordance with the *International Mechanical Code* and the *International Fire Code*.
12. Corrosives shall not include personal or household products in their original packaging used in retail display or commonly used building materials.
13. Buildings and structures occupied for aerosol storage shall be classified as Group S-1, provided that such buildings conform to the requirements of the *International Fire Code*.

ACTING CITY CLERK

14. Display and storage of nonflammable solid and nonflammable or noncombustible liquid hazardous materials in quantities not exceeding the maximum allowable quantity per control area in Group M or S occupancies complying with Section 414.2.4.
15. The storage of black powder, smokeless propellant and small arms primers in Groups M and R-3 and special industrial explosive devices in Groups B, F, M and S, provided such storage conforms to the quantity limits and requirements prescribed in the *International Fire Code.*

Section 11. Subsections 308.2 and 308.3 of the International Building Code, 2003 Edition, are amended as follows:

308.2 Group I-1. This occupancy shall include buildings, structures or parts thereof housing more than 16 persons, on a 24-hour basis, who because of age, mental disability or other reasons, live in a supervised residential environment that provides personal care services. The occupants are capable of responding to an emergency situation without physical assistance from staff. This group shall include, but not be limited to, the following:

Residential board and care facilities
Assisted living facilities
Halfway houses
Group homes
Congregate care facilities
Social rehabilitation facilities
Alcohol and drug centers
Convalescent facilities

A facility such as the above with five or fewer persons <u>and adult family homes licensed by the Washington State Department of Social and Health Services</u> shall be classified as a Group R-3 or shall comply with the *International Residential Code* in accordance with

ACTING CITY CLERK

Section 101.2. A facility such as above, housing at least six and not more than 16 persons, shall be classified as Group R-4.

[W] A facility such as the above providing licensed care to clients in one of the categories listed in Section 313.1 regulated by either the Washington Department of Health or the Department of Social and Health Services shall be classified as Licensed Care Group LC.

308.3 Group I-2. This occupancy shall include buildings and structures used for medical, surgical, psychiatric, nursing or custodial care on a 24-hour basis of more than five persons who are not capable of self-preservation. This group shall include, but not be limited to, the following:

Hospitals

Nursing homes (both intermediate-care facilities and skilled nursing facilities)

Mental hospitals

Detoxification facilities

A facility such as the above with five or fewer persons shall be classified as Group R-3 or shall comply with the *International Residential Code* in accordance with Section 101.2.

[W] A facility such as the above providing licensed care to clients in one of the categories listed in Section 313.1 regulated by either the Washington Department of Health or the Department of Social and Health Services shall be classified as Licensed Care Group LC.

308.3.1 Child care facility. A child care facility that provides care on a 24-hour basis to more than five children $2^1/_2$ years of age or less shall be classified as Group I-2.

Section 12. Subsection 308.5 of the International Building Code, 2003 Edition, is amended as follows:

ACTING CITY CLERK

308.5 Group I-4, day care facilities. This group shall include buildings and structures occupied by persons of any age who receive custodial care for less than 24 hours by individuals other than parents or guardians, relatives by blood, marriage or adoption, and in a place other than the home of the person cared for. A facility such as the above with five or fewer persons shall be classified as a Group R-3 or shall comply with the *International Residential Code* in accordance with Section 101.2. Places of worship during religious functions are not included.

308.5.1 Adult care facility. A facility that provides accommodations for less than 24 hours for more than five unrelated adults and provides supervision and personal care services shall be classified as Group I-4.

Exception: A facility where occupants are capable of responding to an emergency situation without physical assistance from the staff shall be classified as Group A-3.

308.5.2 Child care facility. A facility that provides supervision and personal care on less than a 24-hour basis for more than five children $2^1/_2$ years of age or less shall be classified as Group I-4.

Exceptions:

1. A child day care facility that provides care for more than five but no more than 100 children $2^1/_2$ years or less of age, when the rooms where such children are cared for are located on the level of exit discharge and each of these child care rooms has an exit door directly to the exterior, shall be classified as Group E.

[W] 2. Family child day care homes licensed by the Washington State Department of Social and Health Services for the care of twelve or fewer children shall be classified as Group R-3.

Section 13. Subsections 310.1 and 310.2 of the International Building Code, 2003 Edition, are amended as follows:

ACTING CITY CLERK

310.1 Residential Group R. Residential Group R includes, among others, the use of a building or structure, or a portion thereof, for sleeping purposes when not classified as an Institutional Group I or Licensed Care Group LC. Residential occupancies shall include the following:

R-1 Residential occupancies where the occupants are primarily transient in nature, including:

Boarding houses (transient)

Hotels (transient)

Motels (transient)

R-2 Residential occupancies containing sleeping units or more than two dwelling units where the occupants are primarily permanent in nature, including:

Apartment houses

Boarding houses (not transient)

Convents

Dormitories

Fraternities and sororities

Monasteries

Vacation timeshare properties

Hotels (nontransient)

Motels (nontransient)

R-3 Residential occupancies where the occupants are primarily permanent in nature and not classified as R-1, R-2, R-4 or I and where buildings do not contain more than two dwelling units as applicable in Section 101.2, including adult family homes and family child day care homes for the care of twelve or fewer children, licensed by the Washington State Department of Social and Health Services, or adult and child care facilities that provide accommodations for five or fewer persons of any age for less than 24 hours. Adult

ACTING CITY CLERK

family homes and family child day care homes, or adult and child care facilities that are within a single-family home are permitted to comply with the *International Residential Code* in accordance with Section 101.2.

[W] Foster family care homes licensed by the Washington State Department of Social and Health Services shall be permitted, as an accessory use to a dwelling, for six or fewer children including those of the resident family.

R-4 Residential occupancies shall include buildings arranged for occupancy as residential care/assisted living facilities including more than five but not more than 16 occupants, excluding staff.

[W] EXCEPTIONS:

1 A facility such as the above providing licensed care to clients in one of the categories listed in Section 313.1 regulated by either the Washington Department of Health or the Department of Social and Health Services shall be classified as Licensed Care Group LC.

2. Adult family homes, family child day care homes and foster family care homes shall be classified as Group R-3.

Group R-4 occupancies shall meet the requirements for construction as defined for Group R-3 except as otherwise provided for in this code or shall comply with the *International Residential Code* in accordance with Section 101.2.

310.2 Definitions. The following words and terms shall, for the purposes of this section and as used elsewhere in this code, have the meanings shown herein.

[W] ADULT FAMILY HOME means a dwelling in which a person or persons provide personal care, special care, room and board to more than one but not more than six adults who are not related by blood or marriage to the person or persons providing the services.

ACTING CITY CLERK

BOARDING HOUSE. A building arranged or used for lodging for compensation, with or without meals, and not occupied as a single-family unit.

[W] CHILD DAY CARE, shall, for the purposes of these regulations, mean the care of children during any period of a 24-hour day.

[W] CHILD DAY CARE HOME, FAMILY is a child day care facility, licensed by the state, located in the dwelling of the person or persons under whose direct care and supervision the child is placed, for the care of twelve or fewer children, including children who reside at the home.

DORMITORY. A space in a building where group sleeping accommodations are provided in one room, or in a series of closely associated rooms, for persons not members of the same family group, under joint occupancy and single management, as in college dormitories or fraternity houses.

DWELLING UNIT. A single unit providing complete, independent living facilities for one or more persons, including permanent provisions for living, sleeping, eating, cooking and sanitation.

PERSONAL CARE SERVICE. The care of residents who do not require chronic or convalescent medical or nursing care. Personal care involves responsibility for the safety of the resident while inside the building.

RESIDENTIAL CARE/ASSISTED LIVING FACILITIES. A building or part thereof housing persons, on a 24-hour basis, who because of age, mental disability or other reasons, live in a supervised residential environment which provides personal care services that is not classified as Licensed Care Group LC. The occupants are capable of responding to an emergency situation without physical assistance from staff. This classification shall include, but not be limited to, the following: residential board and care facilities, assisted living facilities,

ACTING CITY CLERK

halfway houses, group homes, congregate care facilities, social rehabilitation facilities, alcohol and drug abuse centers and convalescent facilities.

Section 14. Subsections 311.2 and 311.3 of the International Building Code, 2003 Edition, are amended as follows:

311.2 Moderate-hazard storage, Group S-1. Buildings occupied for storage uses which are not classified as Group S-2 including, but not limited to, storage of the following:

Aerosols, Levels 2 and 3

Aircraft repair hangar

Bags; cloth, burlap and paper

Bamboos and rattan

Baskets

Belting; canvas and leather

Books and paper in rolls or packs

Boots and shoes

Buttons, including cloth covered, pearl or bone

Cardboard and cardboard boxes

Clothing, woolen wearing apparel

Cordage

Furniture

Furs

Glues, mucilage, pastes and size

Grains

Horns and combs, other than celluloid

Leather

Linoleum

ACTING CITY CLERK

Lumber

Motor vehicle and marine repair garages complying with the maximum allowable quantities of hazardous materials listed in Table 307.7(1) (see Section 406.6)

Photo engravings

Resilient flooring

Silks

Soaps

Sugar

Tires, bulk storage of

Tobacco, cigars, cigarettes and snuff

Upholstery and mattresses

Wax candles

311.3 Low-hazard storage, Group S-2. Includes, among others, buildings used for the storage of noncombustible materials such as products on wood pallets or in paper cartons with or without single thickness divisions; or in paper wrappings. Such products are permitted to have a negligible amount of plastic trim, such as knobs, handles or film wrapping. Storage uses shall include, but not be limited to, storage of the following:

Aircraft hangar

Asbestos

Beverages up to and including 12-percent alcohol in metal, glass or ceramic containers

Cement in bags

Chalk and crayons

Covered boat moorage not classed as Group U

Dairy products in nonwaxed coated paper containers

Dry cell batteries

ACTING CITY CLERK

Electrical coils

Electrical motors

Empty cans

Food products

Foods in noncombustible containers

Fresh fruits and vegetables in nonplastic trays or containers

Frozen foods

Glass

Glass bottles, empty or filled with noncombustible liquids

Gypsum board

Inert pigments

Ivory

Meats

Metal cabinets

Metal desks with plastic tops and trim

Metal parts

Metals

Mirrors

Oil-filled and other types of distribution transformers

Parking garages, open or enclosed

Porcelain and pottery

Stoves

Talc and soapstones

Washers and dryers

ACTING CITY CLERK

Section 15. Subsection 312.1 of the International Building Code, 2003 Edition, is amended as follows:

312.1 General. Buildings and structures of an accessory character and miscellaneous structures not classified in any specific occupancy shall be constructed, equipped and maintained to conform to the requirements of this code commensurate with the fire and life hazard incidental to their occupancy. Group U shall include, but not be limited to, the following:

Agricultural buildings

Aircraft hangars, accessory to a one- or two-family residence (see Section 412.3)

Barns

Carports

<u>Covered boat moorage accessory to a Group R, Division 3 dwelling unit</u>

Fences more than 6 feet (1829 mm) high

Grain silos, accessory to a residential occupancy

Greenhouses

Livestock shelters

Private garages

Retaining walls

Sheds

Stables

Tanks

Towers

Section 16. A new Section 313 is added to the Seattle Building Code, 2003 Edition, to read as follows:

ACTING CITY CLERK

[W] SECTION 313

LICENSED CARE GROUP LC.

313.1 General. Licensed Care Group LC includes the use of a building, structure, or portion thereof, for the business of providing licensed care to clients in one of the following categories regulated by either the Washington Department of Health or the Department of Social and Health Services:

Adult residential rehabilitation facility

Alcoholism intensive inpatient treatment service

Alcoholism detoxification service

Alcoholism long-term treatment service

Alcoholism recovery house service

Boarding home

Group care facility

Group care facility for severely and multiple handicapped children

Residential treatment facility for psychiatrically impaired children and youth

EXCEPTION: Where the care provided at an alcoholism detoxification service is acute care similar to that provided in a hospital, the facility shall be classified as a Group I-2 Occupancy.

Section 17. Section 401 of the International Building Code, 2003 Edition, is amended as follows:

SECTION 401

SCOPE <u>AND DEFINITION</u>

401.1 Detailed use and occupancy requirements. In addition to the occupancy and construction requirements in this code, the provisions of this chapter apply to the special uses and occupancies described herein.

ACTING CITY CLERK

401.2 Definition—Fire District. The Fire District consists of that part of the city within the boundary described as follows:

Beginning at the intersection of the center line of Alaskan Way and Clay Street; thence northeasterly along the center line of Clay Street to an intersection with the center line of Denny Way; thence easterly along the center line of Denny Way to an intersection with the center line of Yale Avenue; thence southeasterly along the center line of Yale Avenue to an intersection with the center line of Interstate Highway 5; thence southerly and south-easterly along the centerline of Interstate 5 to an intersection with the center line of 7th Avenue South; thence southerly along the center line of 7th Avenue South to an intersection with the center line of Dearborn Street; thence westerly along the center line of Dearborn Street to an intersection with the center line of Airport Way; thence northwesterly along the center line of Airport Way to an intersection with the center line of 4th Avenue South; thence southerly along the center line of 4th Avenue South to an intersection with the center line of South Royal Brougham Way; thence westerly along said center line of South Royal Brougham Way to an intersection with the center line of South Alaskan Way; thence southerly along the center line of South Alaskan Way to an intersection with the center line of South Massachusetts Street, thence westerly along the center line of South Massachusetts Street to the Outer Harbor Line in Elliott Bay, thence northerly and northwesterly along said Outer Harbor Line to an intersection with the center line of West Harrison Street, thence easterly along the center line of West Harrison Street to an intersection with the center line of Alaskan Way, then southeasterly along the center line of Alaskan Way to the point of beginning.

Buildings and structures located partially within and partially outside of the Fire District, are considered to be located in the Fire District.

ACTING CITY CLERK

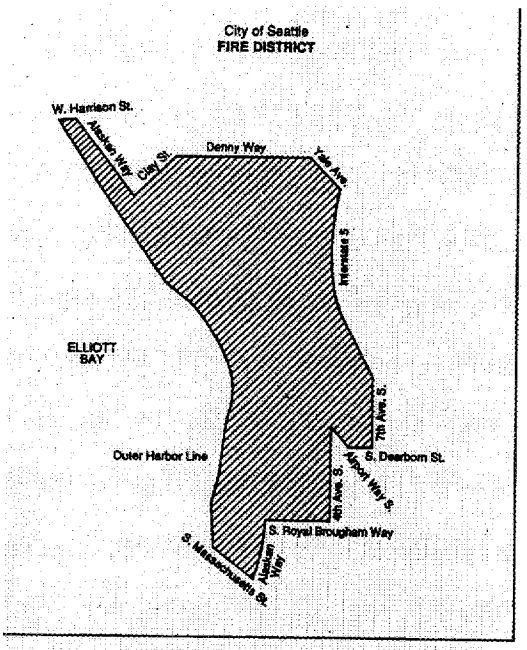

Figure 401.2

Section 18 Subsection 402.3 of the International Building Code, 2003 Edition, is repealed.

Section 19. Subsection 402.12 of the International Building Code, 2003 Edition, is amended as follows:

402.12 ((~~Standby~~)) <u>Emergency</u> power. Covered mall buildings exceeding 50,000 square feet (4645 m^2) shall be provided with ((~~standby~~)) <u>emergency</u> power systems that are capable of operating the emergency voice/alarm communication system.

Section 20. Section 403 of the International Building Code, 2003 Edition, is amended as follows:

SECTION 403

HIGH-RISE BUILDINGS

403.1 Applicability. The provisions of this section shall apply to buildings having occupied floors located more than 75 feet (22 860 mm) above the lowest level of fire department vehicle access <u>and to buildings with no fire department vehicle access that have occupied floors more than 35 feet above grade plane</u>.

ACTING CITY CLERK

Exception: The provisions of this section shall not apply to the following buildings and structures:

1. Airport traffic control towers in accordance with Section 412.
2. Open parking garages in accordance with Section 406.3.
3. Buildings with an occupancy in Group A-5 in accordance with Section 303.1.
4. Low-hazard special industrial occupancies in accordance with Section 503.1.2.
5. Buildings with an occupancy in Group H-1, H-2 or H-3 in accordance with Section 415.

Interpretation I403.1a: Item 2 only includes buildings in which parking is the principal use.

Interpretation I403.1b: For the purpose of this section, occupied roof decks shall be considered floors used for human occupancy where the occupant load of the deck is 10 or more on the roof of a building not equipped with an automatic sprinkler system or where the occupant load is 50 or more on the roof of a building that is equipped with an automatic sprinkler system.

403.1.1 Predesign Conference. At least 60 days prior to application, the applicant shall arrange a predesign conference with the design team, the building official and the fire code official, to review the proposed emergency life safety systems for the building and the protection of the life safety systems. It is the purpose of the meeting to obtain conceptual approval from the building official and the fire code official of the proposed systems and to allow for design based upon the latest state-of-the-art.

The building official and fire code official may require sufficient documentation, based upon appropriate analyses, that the proposal meets the intent of nationally recognized good practices. The building permit shall not be issued until the building official and fire code official have approved, in writing, the emergency life safety systems for the building and the

ACTING CITY CLERK

protection of the life safety systems. The documentation of the predesign meeting shall be reflected on the plans for the building and become a permanent part of the Department of Planning and Development's records.

The sequence and/or timing of operation of smoke and heat detection systems shall be determined at the predesign conference.

403.1.2 Testing. All mechanical and electrical equipment installed per approved plans and specifications pursuant to this section shall be tested and proven to be in proper working condition to the satisfaction of the fire code official before issuance of the Certificate of Occupancy. Such systems shall be maintained in accordance with the Fire Code.

[F] 403.2 Automatic sprinkler system. Buildings and structures shall be equipped throughout with an automatic sprinkler system in accordance with Section 903.3.1.1 and a secondary water supply where required by Section 903.3.5.2.

Exception: An automatic sprinkler system shall not be required in spaces or areas of:

((~~1. Open parking garages in accordance with Section 406.3.~~

~~2.~~)) ((~~Telecommunications equipment buildings~~)) Areas or spaces used exclusively for telecommunications equipment, associated electrical power distribution equipment, and batteries ((~~and standby engines~~)), provided that those spaces or areas are equipped throughout with ((~~an~~)) automatic ((~~fire detection system~~)) smoke detectors in accordance with Section 907.2 and are separated from the remainder of the building with fire barriers consisting of 1-hour fire-resistance-rated walls and 2-hour fire-resistance-rated floor/ceiling assemblies.

403.2.1 Sprinkler system design. Combination standpipe/sprinkler risers using 6 inch pipe minimum, shall be used with the sprinkler system interconnected between and served from two standpipe risers. Shut-off valves, water-flow devices, and check valves (or pressure reducing valves) shall be provided on each floor at the sprinkler system connection

ACTING CITY CLERK

to each standpipe. Two four-way fire department connections shall be provided on separate streets well separated from each other. At least one of the fire department connections shall be connected to the riser above a riser isolation valve.

Exception: Dry pipe sprinkler systems serving parking garages may be supplied separately from the standpipe risers and use a single, separate two-way fire department connection.

403.3 Reduction in fire-resistance rating. The fire-resistance-rating reductions listed in Sections 403.3.1 and 403.3.2 shall be allowed in buildings that have sprinkler control valves equipped with supervisory initiating devices and water-flow initiating devices for each floor.

403.3.1 Type of construction. The following reductions in the minimum construction type allowed in Table 601 shall be allowed as provided in Section 403.3:

1. Type IA construction other than structural frame and bearing walls shall be allowed to be reduced to Type IB.
2. In other than Groups F-1, M and S-1, Type IB construction other than structural frame and bearing walls shall be allowed to be reduced to Type IIA.
3. The height and area limitations of the reduced construction type shall be allowed to be the same as for the original construction type.

403.3.2 Shaft enclosures. The required fire-resistance rating of the fire barrier walls enclosing vertical shafts, other than exit enclosures and elevator hoistway enclosures, shall be reduced to 1 hour where automatic sprinklers are installed within the shafts at the top and at alternate floor levels.

403.4 Emergency escape and rescue. Emergency escape and rescue openings required by Section 1025 are not required.

[F] 403.5 Automatic fire detection. Smoke detection shall be provided in accordance with Section 907.2.12.1.

ACTING CITY CLERK

[F] 403.6 Emergency voice/alarm communication systems. An emergency voice/alarm communication system shall be provided in accordance with Section 907.2.12.2.

[F] 403.7 Fire department communications system. A two-way fire department communications system shall be provided for fire department use in accordance with Section 907.2.12.3.

[F] 403.8 Fire command. A fire command center complying with Section 911 shall be provided in a location approved by the fire department.

403.9 Elevators. Elevator operation and installation shall be in accordance with Chapter 30.

In buildings with stories that are located more than 160 feet (48 768 mm) above the lowest point of fire department access, access to each floor shall be provided by not less than two elevators served by separate machine rooms.

403.10 No requirements. ((~~**Standby power.** A standby power system complying with Section 2702 shall be provided for standby power loads specified in Section 403.10.2.~~

~~**403.10.1 Special requirements for standby power systems.** If the standby system is a generator set inside a building, the system shall be located in a separate room enclosed with 2-hour fire-resistance-rated fire barrier assemblies. System supervision with manual start and transfer features shall be provided at the fire command center.~~

~~**403.10.2 Standby power loads.** The following are classified as standby power loads:~~

~~1. Power and lighting for the fire command center required by Section 403.8;~~

~~2. Electrically powered fire pumps;~~

~~3. Ventilation and automatic fire detection equipment for smokeproof enclosures.~~

~~Standby power shall be provided for elevators in accordance with Section 3003.~~))

403.11 Emergency power systems. An emergency power system complying with Section 2702 shall be provided for emergency power loads specified in Section 403.11.1.

403.11.1 Emergency power loads. The following are classified as emergency power loads:

ACTING CITY CLERK

1. Exit signs and means of egress illumination required by Chapter 10;
2. Elevator car lighting;
3. Emergency voice/alarm communications systems;
4. Automatic fire detection systems; ((~~and~~))
5. Fire alarm systems;
6. Power and lighting for mechanical equipment rooms and the fire command center required by Section 403.8;
7. Electrically powered fire pumps;
8. Ventilation and automatic fire detection equipment for smokeproof enclosures;
9. Smoke control system; and
10. A selected elevator in each bank, in accordance with Section 3016.6. A bank of elevators is a group of elevators or a single elevator controlled by a common operating system—all elevators that respond to a single call button constitute a bank of elevators. All elevators shall be transferable to emergency power.

Note: There is no limit on the number of cars that may be in a bank, but there may not be more than four cars within a common hoistway. See Section 3016.7.

403.12 Stairway door operation. Stairway doors other than the exit discharge doors shall be permitted to be locked from the stairway side. Stairway doors ((~~that are locked from the stairway side~~)) shall be capable of being unlocked simultaneously without unlatching upon a signal from the fire command center, and shall unlock automatically upon activation of a fire alarm anywhere in the building.

403.12.1 Stairway communications system. A telephone or other two-way communications system connected to an approved constantly attended station shall be provided at not less than every fifth floor in each required stairway ((~~where the doors to the stairway are locked~~)).

ACTING CITY CLERK

Code Alternate CA403.12: In lieu of the stairway communications system required by Section 403.12.1, re-entry may be provided at approximately five-story intervals at all times the building is occupied. A sign meeting the requirements of Section 1011 for means of egress identification shall identify each re-entry floor.

403.12.2 Stairway Penthouses. All required exit stairways shall terminate at the roof in a penthouse with a door complying with Sections 1008.1.1 and 1008.1.2. The building official may approve an alternate design for rescue purposes at the pre-design conference.

403.13 Smoke Control. A smoke control system meeting the requirements of Section 909 shall be provided.

403.13.1 **((~~403.13~~)) Smokeproof exit enclosures.** Every required stairway serving floors more than 75 feet (22 860 mm) above the lowest level of fire department vehicle access shall comply with Sections 909.20 and 1019.1.8.

Exception: Smokeproof enclosures are not required where smoke control systems complying with Code Alternate CA909 are provided.

403.14 Seismic considerations. For seismic considerations, see Chapter 16.

403.15 Emergency Operational Plan. Prior to the issuance of a Certificate of Occupancy, the owner-occupant of the building shall assign a responsible person as the building's Fire Safety Director to work with the fire chief in establishing an operational plan for the building. The operational plan shall contain the guideline procedures to be followed and responsibilities of the fire department, building employees, and tenants under emergency conditions including special provisions for persons with disabilities. The plan shall also include procedures for operation, maintenance and testing of the life safety systems and the allowable use and occupancy of each portion of the building. One copy of the operational plan shall be filed with the fire chief, and one shall be posted in the central control station, prior to issuance of the Certificate of Occupancy.

ACTING CITY CLERK

403.16 Signs.

403.16.1 Elevator Lobbies. A sign shall be posted in every lobby above each call switch noting that the elevators will be recalled to the building lobby on fire alarm. This sign shall warn persons not to use the elevator in the event of fire and shall direct them to use the stairway or give other appropriate directions for exiting.

EXCEPTION: Signs need not be posted in lobbies at the main egress level when the means of egress are obviously identifiable if approved by the building official.

403.16.2 Main Floor Lobbies. A sign indicating the number of each elevator shall be posted and maintained at each main floor elevator lobby and at alternate floors of recall, when provided.

403.16.3 Stair Re-entry Signs. A sign shall be posted on each floor landing within a stairway indicating where re-entry is provided into the building or indicating the location of telephones or other means of two-way communication.

403.16.4 Other Signs. Other signs required by this code, including, but not limited to, stairway identification signs required by Section 1019.1.7 and exit signs required by Section 1006, shall be provided.

Section 21. Subsection 404.1 of the International Building Code, 2003 Edition, is amended as follows:

404.1 General. Vertical openings meeting the requirements of this section are not required to be enclosed in other than Group H occupancies.

404.1.1 Definition. The following word and term shall, for the purposes of this chapter and as used elsewhere in this code, have the meaning shown herein.

ATRIUM. An opening connecting two or more stories other than enclosed stairways, elevators, hoistways, escalators, plumbing, electrical, air-conditioning or other equipment,

ACTING CITY CLERK

which is closed at the top and not defined as a mall. Stories, as used in this definition, do not include balconies within assembly groups or mezzanines that comply with Section 505.

404.1.2 Predesign Conference. At least 60 days prior to application, the applicant shall arrange a predesign conference with the design team, the building official and the fire chief, to review the proposed smoke control and life safety systems for the building. It is the purpose of the meeting to obtain conceptual approval from the building official and the fire chief of the proposed systems and to allow for a design based upon the latest state-of-the-art.

The building official and fire chief may require sufficient documentation, based upon appropriate analyses, that the concept meets the intent of nationally recognized good practices. The building permit shall not be issued until the building official and fire chief have approved, in writing, the smoke control and life safety systems for the building. The documentation of the predesign meeting shall be reflected on the plans for the building and become a permanent part of the Department of Planning and Development's records.

Section 22. Subsection 404.3 of the International Building Code, 2003 Edition, is amended as follows:

[F] 404.3 Automatic sprinkler protection. An approved automatic sprinkler system shall be installed throughout the entire building.

Exceptions:

1. That area of a building adjacent to or above the atrium need not be sprinklered provided that portion of the building is separated from the atrium portion by a 2-hour fire-resistance-rated fire barrier wall or horizontal assembly or both.

ACTING CITY CLERK

2. Where the ceiling of the atrium is more than 55 feet (16 764 mm) above ((~~the floor~~)) <u>any floor area open to the atrium</u>, sprinkler protection at the ceiling of the atrium is not required.

Section 23. Subsections 404.5 and 404.6 of the International Building Code, 2003 Edition, are amended as follows:

404.5 Enclosure of atriums. Atrium spaces shall be separated from adjacent spaces by a 1-hour fire barrier wall.

Exceptions:

1. A glass wall forming a smoke partition where automatic sprinklers are spaced 6 feet (1829 mm) or less along both sides of the separation wall, or on the room side only if there is not a walkway on the atrium side, and between 4 inches and 12 inches (102 mm and 305 mm) away from the glass and so designed that the entire surface of the glass is wet upon activation of the sprinkler system. The glass shall be installed in a gasketed frame so that the framing system deflects without breaking (loading) the glass before the sprinkler system operates.
2. A glass-block wall assembly in accordance with Section 2110 and having a $^3/_4$-hour fire protection rating.
3. The adjacent spaces of any three floors of the atrium shall not be required to be separated from the atrium where such spaces are included in computing the atrium volume for the design of the smoke control system.

<u>**Code Alternate CA404.5**: The separation between the atrium and tenant spaces that are not guest rooms or dwelling units may be omitted on four floors when:</u>

<u>1. The building is of Type IA or IB construction.</u>

ACTING CITY CLERK

2. The perimeter of the opening is protected by draft curtains and a row of automatic sprinkler heads not more than six feet (1829 mm) on center as required for escalator protection;

3. All spaces of the building separated from the atrium by less than one-hour fire-resistive construction are equipped with an automatic smoke detection system;

4. Tenant spaces open to the atrium have access to two enclosed exits separated by one-half the building diagonal with one exit located so that occupants can exit in a direction away from the atrium. For the purpose of this requirement "away from the atrium" means not being forced to exit parallel and adjacent to the atrium opening. "Areas open to the atrium" are those areas that are not separated from the atrium with at least a one hour fire barrier.

404.6 ((~~Standby~~)) Emergency power. Equipment required to provide smoke control shall be connected to a ((~~standby~~)) emergency power system in accordance with Section 909.11.

Code Alternate CA404.6: Emergency power is not required for smoke control systems in buildings that have at least two exits and atria with a total volume of less than 40,000 cubic feet (1133 m^3).

Section 24. Subsection 405.1 of the International Building Code, 2003 Edition, is amended as follows:

405.1 General. The provisions of this section apply to building spaces having a floor level used for human occupancy more than 30 feet (9144 mm) below the lowest level of exit discharge.

Exceptions:

1. One- and two-family dwellings, sprinklered in accordance with Section 903.3.1.3.
2. Parking garages with automatic fire suppression systems in compliance with Section 405.3.
3. Fixed guideway transit systems that comply with NFPA 130 as amended.

ACTING CITY CLERK

4. Grandstands, bleachers, stadiums, arenas and similar facilities.
5. Where the lowest story is the only story that would qualify the building as an underground building and has an area not exceeding 1,500 square feet (139 m^2) and has an occupant load less than 10.

Section 25. Subsections 405.9 and 405.10 of the International Building Code, 2003 Edition, are amended as follows:

[F] 405.9 No requirements. ((~~**Standby power.** A standby power system complying with Section 2702 shall be provided standby power loads specified in Section 405.9.1.~~

~~**405.9.1 Standby power loads.** The following loads are classified as standby power loads.~~

~~1. Smoke control system.~~

~~2. Ventilation and automatic fire detection equipment for smokeproof enclosures.~~

~~3. Fire pumps.~~

~~Standby power shall be provided for elevators in accordance with Section 3003.~~

~~**405.9.2 Pick-up time.** The standby power system shall pick up its connected loads within 60 seconds of failure of the normal power supply.~~))

[F] 405.10 Emergency power. An emergency power system complying with Section 2702 shall be provided for emergency power loads specified in Section 405.10.1.

405.10.1 Emergency power loads. The following loads are classified as emergency power loads:

1. Emergency voice/alarm communications systems.
2. Fire alarm systems.
3. Automatic fire detection systems.
4. Elevator car lighting.
5. Means of egress and exit sign illumination as required by Chapter 10.

ACTING CITY CLERK

6. Smoke control systems.

7. Ventilation and automatic fire detection equipment for smokeproof enclosures.

8. Fire pumps.

9. A selected elevator in each bank in accordance with Section 3016.7. A bank of elevators is a group of elevators or a single elevator controlled by a common operating system—all elevators that respond to a single call button constitute a bank of elevators. All elevators shall be transferable to emergency power.

Note: There is no limit on the number of cars that may be in a bank, but there may not be more than four cars within a common hoistway. See Section 3016.7.

Section 26. Subsection 406.2 of the International Building Code, 2003 Edition, is amended as follows:

406.2 Parking garages.

406.2.1 Classification. Parking garages shall be classified as either open, as defined in Section 406.3, or enclosed and shall meet the appropriate criteria in Section 406.4. Also see Section 508 for special provisions for parking garages.

406.2.2 Clear height. The clear height of each floor level in vehicle and pedestrian traffic areas shall not be less than ((~~7 feet (2134 mm)~~)) 6 feet 6 inches (1981 mm). Vehicle and pedestrian areas accommodating van-accessible parking required by Section 1106.5 shall conform to ICC A117.1.

406.2.3 Guards. Guards shall be provided in accordance with Section 1012 at exterior and interior vertical openings on floor and roof areas where vehicles are parked or moved and where the vertical distance to the ground or surface directly below exceeds 30 inches (762 mm).

ACTING CITY CLERK

406.2.4 Vehicle barriers. Parking areas shall be provided with exterior or interior walls or vehicle barriers, except at pedestrian or vehicular accesses, designed in accordance with Section 1607.7. Vehicle barriers not less than 2 feet (607 mm) high shall be placed at the ends of drive lanes, at the end of parking spaces where the difference in adjacent floor elevation is greater than 1 foot (305 mm).

406.2.5 Ramps. Vehicle ramps shall not serve as an exit element.

406.2.6 Floor surface. Parking surfaces shall be of concrete or similar noncombustible and nonabsorbent materials.

Exception: Asphalt parking surfaces are permitted at ground level.

The area of floor used for parking of automobiles or other vehicles shall be sloped to facilitate the movement of liquids to a drain or toward the main vehicle entry doorway.

406.2.7 Mixed separation. Parking garages shall be separated from other occupancies in accordance with Section 302.3.2.

406.2.8 Special hazards. Connection of a parking garage with any room in which there is a fuel-fired appliance shall be by means of a vestibule providing a two-doorway separation.

Exception: A single door shall be allowed provided the sources of ignition in the appliance are at least 18 inches (457 mm) above the floor.

406.2.9 Attached to rooms. Openings from a parking garage directly into a room used for sleeping purposes shall not be permitted.

Section 27. Subsection 411.2 of the International Building Code, 2003 Edition, is amended as follows:

411.2 Special amusement building. A special amusement building is any ((~~temporary or permanent~~)) building or portion thereof that is occupied for amusement, entertainment or educational purposes and that contains a device or system that conveys passengers or provides

ACTING CITY CLERK

a walkway along, around or over a course in any direction so arranged that the means of egress path is not readily apparent due to visual or audio distractions or is intentionally confounded or is not readily available because of the nature of the attraction or mode of conveyance through the building or structure.

Temporary amusement building is an amusement building used for that purpose for a period of 6 weeks or less in any given twelve months.

Portable amusement building is an amusement building designed and constructed to be portable to be erected and used on a short term basis at each location.

Permanent amusement building is any amusement building not otherwise classified as portable or temporary.

Section 28. Subsections 411.6 and 411.7 of the International Building Code, 2003 Edition, are amended as follows:

[F] 411.6 Emergency voice/alarm communications system. An emergency voice/alarm communications system shall be provided in all portable and permanent amusement buildings in accordance with Sections 907.2.11 and 907.2.12.2, which is also permitted to serve as a public address system and shall be audible throughout the entire special amusement building.

411.7 Exit marking. Exit signs shall be installed at the required exit or exit access doorways of amusement buildings. Approved directional exit markings shall also be provided. In permanent amusement buildings, ((~~W~~))where mirrors, mazes or other designs are utilized that disguise the path of egress travel such that they are not apparent, approved low-level exit signs and directional path markings shall be provided and located not more than 8 inches (203 mm) above the walking surface and on or near the path of egress travel. Such markings shall become visible in an emergency. The directional exit marking shall be activated by the automatic fire detection system and the automatic sprinkler system in accordance with Section 907.2.11.2.

ACTING CITY CLERK

Section 29. Subsection 412.2 of the International Building Code, 2003 Edition, is amended as follows:

412.2 Aircraft hangar.

412.2.1 Exterior walls. Exterior walls located less than 30 feet (9 144 mm) from property lines, lot lines or a public way shall have a fire-resistance rating not less than 2 hours.

412.2.2 Basements. Where hangars have basements, the floor over the basement shall be of Type IA construction and shall be made tight against seepage of water, oil or vapors. There shall be no opening or communication between the basement and the hangar. Access to the basement shall be from outside only.

412.2.3 Floor surface. Floors shall be graded and drained to prevent water or fuel from remaining on the floor. Floor drains shall discharge through an oil separator to the sewer or to an outside vented sump.

412.2.4 Heating equipment. Heating equipment shall be placed in another room separated by 2-hour fire-resistance-rated construction. Entrance shall be from the outside or by means of a vestibule providing a two-doorway separation.

Exceptions:

1. Unit heaters suspended at least 10 feet (3048 mm) above the upper surface of wings or engine enclosures of the highest aircraft that are permitted to be housed in the hangar and at least 8 feet (2438 mm) above the floor in shops, offices and other sections of the hangar communicating with storage or service areas.
2. A single interior door shall be allowed, provided the sources of ignition in the appliances are at least 18 inches (457 mm) above the floor.

ACTING CITY CLERK

412.2.5 Finishing. The process of "doping," involving use of a volatile flammable solvent, or of painting, shall be carried on in a separate detached building equipped with automatic fire-extinguishing equipment in accordance with Section 903.

412.2.6 Fire suppression. Aircraft hangars shall be provided with fire suppression as required in NFPA 409.

Exception: Group II hangars as defined in NFPA 409 storing private aircraft without major maintenance or overhaul are exempt from foam suppression requirements.

412.2.7 Restrictions in the Fire District. Aircraft hangars shall not be located in the Fire District defined in Section 401.2 unless work is limited to exchange of parts and maintenance requiring no open flame or welding.

Section 30. Subsection 412.5 of the International Building Code, 2003 Edition, is amended as follows:

412.5 Heliports and helistops.

412.5.1 General. Heliports and helistops may be erected on buildings or other locations where they are constructed in accordance with this section.

412.5.2 Definitions. The following words and terms shall, for the purposes of this chapter and as used elsewhere in this code, have the meanings shown herein.

HELIPORT. An area of land or water or a structural surface that is used, or intended for use, for the landing and taking off of helicopters, and any appurtenant areas that are used, or intended for use, for heliport buildings and other heliport facilities.

HELISTOP. The same as a "Heliport," except that no fueling, defueling, maintenance, repairs or storage of helicopters is permitted.

412.5.3 Size. The touchdown or landing area for helicopters of less than 3,500 pounds (1588 kg) shall be a minimum of 20 feet (6096 mm) in length and width. The touchdown

ACTING CITY CLERK

area shall be surrounded on all sides by a clear area having a minimum average width at roof level of 15 feet (4572 mm) but with no width less than 5 feet (1524 mm).

412.5.4 Design. Helicopter landing areas and the supports thereof on the roof of a building shall be noncombustible construction. Landing areas shall be designed to confine any flammable liquid spillage to the landing area itself and provisions shall be made to drain such spillage away from any exit or stairway serving the helicopter landing area or from a structure housing such exit or stairway. For structural design requirements, see Section 1605.5.

412.5.5 Means of egress. The means of egress from heliports and helistops shall comply with the provisions of Chapter 10. Landing areas located on buildings or structures shall have two or more means of egress. For landing platforms or roof areas less than 60 feet (18 288 mm) in length, or less than 2,000 square feet (187 m^2) in area, the second means of egress may be a fire escape or ladder leading to the floor below.

412.5.6 Rooftop heliports and helistops. Rooftop heliports and helistops shall comply with NFPA 418.

412.5.7 Restrictions in the Fire District. Heliports shall not be located in the Fire District defined in Section 401.2.

Section 31. A new Subsection 413.3 is added to the Seattle Building Code, 2003 Edition, to read as follows:

413.3 Mini-storage warehouses. In mini-storage warehouse buildings, individual storage lockers shall be separated from each other with fire partitions.

Exception: The separation between individual storage lockers may be non-rated in rooms 500 square feet (46 m^2) or less in area and in sprinklered rooms of any size.

ACTING CITY CLERK

Section 32. Subsection 414.1 of the International Building Code, 2003 Edition, is amended as follows:

414.1 General. The provisions of this section shall apply to buildings and structures occupied for the manufacturing, processing, dispensing, use or storage of hazardous materials.

414.1.1 Other provisions. Buildings and structures with an occupancy in Group H shall also comply with the applicable provisions of Section 415 and the *International Fire Code.*

414.1.2 Materials. The safe design of hazardous material occupancies is material dependent. Individual material requirements are also found in Sections 307 and 415, and in the *International Mechanical Code* and the *International Fire Code.*

414.1.2.1 Materials. The safe design of hazardous material occupancies is material dependent. Individual material requirements are also found in Sections 307 and 415, and in the *International Mechanical Code* and the *International Fire Code.*

414.1.2.2 Aerosols. Level 2 and 3 aerosol products shall be stored and displayed in accordance with the *International Fire Code*. See Section 311.2 and the *International Fire Code* for occupancy group requirements.

414.1.3 Information required. Separate floor plans shall be submitted for buildings and structures with an occupancy in Group H, identifying the locations of anticipated contents and processes so as to reflect the nature of each occupied portion of every building and structure. A report identifying hazardous materials including, but not limited to, materials representing hazards that are classified in Group H to be stored or used, shall be submitted and the methods of protection from such hazards shall be indicated on the construction documents. The opinion and report shall be prepared by a qualified person, firm or corporation approved by the building official and shall be provided without charge to the enforcing agency.

ACTING CITY CLERK

414.1.4 Pre-design Conference. Prior to application for permit for a Group H-5 Occupancy, the applicant shall arrange a pre-design conference with the design team, the building official and fire chief to review proposed emergency life safety systems for the building and the appropriate protection of the life safety systems. For Group H-4 occupancies, a pre-design conference is recommended. It is the purpose of the meeting to obtain conceptual approval from the building official and the fire chief of the proposed systems and to allow for design based upon the latest state-of-the-art.

Applicants shall bring to the conference preliminary building plans and a draft of the Hazardous Materials Management Plan. The building official and fire chief may require sufficient documentation, based upon appropriate analyses, that the proposal meets the intent of nationally-recognized good practices. The building permit shall not be issued until the building official and fire chief have approved, in writing, the emergency life safety systems for the building and the appropriate protection of the life safety systems. The documentation of the pre-design meeting shall be reflected on the plans for the building and become a permanent part of the Department of Planning and Development's records.

Section 33. Subsection 414.5 of the International Building Code, 2003 Edition, is amended as follows:

414.5 Inside storage, dispensing and use. The inside storage, dispensing and use of hazardous materials in excess of the maximum allowable quantities per control area of Tables 307.7(1) and 307.7(2) shall be in accordance with Sections 414.5.1 through 414.5.5 of this code and the *International Fire Code.*

414.5.1 Explosion control. Explosion control shall be provided in accordance with the *International Fire Code* as required by Table 414.5.1 where quantities of hazardous

PASTING CITY CLERK

materials specified in that table exceed the maximum allowable quantities in Table 307.7(1) or where a structure, room or space is occupied for purposes involving explosion hazards as required by Section 415 or the *International Fire Code.*

414.5.2 Monitor control equipment. Monitor control equipment shall be provided where required by the *International Fire Code.*

414.5.3 Automatic fire detection systems. Group H occupancies shall be provided with an automatic fire detection system in accordance with Section 907.2.

414.5.4 Standby or emergency power. Where mechanical ventilation, treatment systems, temperature control, alarm, detection or other electrically operated systems are required, such systems shall be provided with an emergency or standby power system in accordance with the International Fire Code and the ((~~ICC~~)) Seattle *Electrical Code.*

Exceptions:

1. Storage areas for Class I and II oxidizers.
2. Storage areas for Class III, IV and V organic peroxides.
3. Storage, use and handling areas for highly toxic or toxic materials as provided for in the *International Fire Code.*
4. Standby power for mechanical ventilation, treatment systems and temperature control systems shall not be required where an approved fail-safe engineered system is installed.

414.5.5 Spill control, drainage and containment. Rooms, buildings or areas occupied for the storage of solid and liquid hazardous materials shall be provided with a means to control spillage and to contain or drain off spillage and fire protection water discharged in the storage area where required in the *International Fire Code.* The methods of spill control shall be in accordance with the *International Fire Code.*

SEATTLE CITY CLERK

Section 34. Subsections 415.4 and 415.5 of the International Building Code, 2003 Edition, are amended as follows:

415.4 Special provisions for Group H-1 occupancies. Group H-1 occupancies shall be in buildings used for no other purpose, shall not exceed one story in height and be without basement, crawl spaces or other under-floor spaces. Roofs shall be of lightweight construction with suitable thermal insulation to prevent sensitive material from reaching its decomposition temperature.

Group H-1 occupancies containing materials which are in themselves both physical and health hazards in quantities exceeding the maximum allowable quantities per control area in Table 307.7.(2) shall comply with requirements for both Group H-1 and H-4 occupancies.

415.4.1 Floors in storage rooms. Floors in storage areas for organic peroxides, pyrophoric materials and unstable (reactive) materials shall be of liquid-tight, noncombustible construction.

415.4.2 Restrictions in the Fire District. Group H-1 occupancies shall not be located in the Fire District defined in Section 401.2.

415.5 Special provisions for Group H-2 and H-3 occupancies. Group H-2 and H-3 occupancies containing quantities of hazardous materials in excess of those set forth in Table 415.3.2 shall be in buildings used for no other purpose, shall not exceed one story in height and shall be without basements, crawl spaces or other under-floor spaces.

Group H-2 and H-3 occupancies containing water-reactive materials shall be resistant to water penetration. Piping for conveying liquids shall not be over or through areas containing water reactives, unless isolated by approved liquid-tight construction.

Exception: Fire protection piping.

ACTING CITY CLERK

415.5.1 Floors in storage rooms. Floors in storage areas for organic peroxides, oxidizers, pyrophoric materials, unstable (reactive) materials and water-reactive solids and liquids shall be of liquid-tight, noncombustible construction.

415.5.2 Waterproof room. Rooms or areas used for the storage of water-reactive solids and liquids shall be constructed in a manner that resists the penetration of water through the use of waterproof materials. Piping carrying water for other than approved automatic fire sprinkler systems shall not be within such rooms or areas.

415.5.3 Restrictions in the Fire District. Group H-2 Occupancies having a floor area in excess of 500 square feet (46 m^2) are not permitted in the Fire District. Group H-3 Occupancies having a floor area in excess of 1,500 square feet (139 m^2) are not permitted in the Fire District. See Section 401.2 for definition of Fire District.

Section 35. Subsection 415.7.4 of the International Building Code, 2003 Edition, is amended as follows:

415.7.4 Dry cleaning plants. The construction and installation of dry cleaning plants shall be in accordance with the requirements of this code, the *International Mechanical Code*, the *((~~International~~))* *Uniform Plumbing Code* and NFPA 32. Dry cleaning solvents and systems shall be classified in accordance with the *International Fire Code.*

Section 36. Subsection 415.9.2.8 of the International Building Code, 2003 Edition, is amended as follows:

415.9.2.8 Electrical.

415.9.2.8.1 General. Electrical equipment and devices within the fabrication area shall comply with the ((~~ICC~~)) *Seattle Electrical Code*. The requirements for hazardous locations need not be applied where the average air change is at least four

ACTING CITY CLERK

times that set forth in Section 415.9.2.6 and where the number of air changes at any location is not less than three times that required by Section 415.9.2.6. The use of recirculated air shall be permitted.

415.9.2.8.2 Workstations. Workstations shall not be energized without adequate exhaust ventilation. See Section 415.9.2.6 for workstation exhaust ventilation requirements.

Section 37. Section 416 of the International Building Code, 2003 Edition, is amended as follows:

416.1 General. The provisions of this section shall apply to the construction, installation and use of buildings and structures, or parts thereof, for the spraying of flammable paints, varnishes and lacquers or other flammable materials or mixtures or compounds used for painting, varnishing, staining or similar purposes. Such construction and equipment shall comply with the *International Fire Code.*

416.2 Location of spray-finishing operations. Spray-finishing operations conducted in buildings used for Group A, E, I or R occupancies shall be located in a spray room protected with an approved automatic sprinkler system installed in accordance with Section 903.3.1.1 and separated vertically and horizontally from other areas in accordance with this code. In other occupancies, spray-finishing operations shall be conducted in a spray room, spray booth or limited spraying space approved for such use.

Spray-finishing operations shall not be conducted in basements.

416.3 ~~416.2~~ Spray rooms. Spray rooms shall be enclosed with fire barrier walls and horizontal assemblies or both with not less than a 1-hour fire-resistance rating. Floors shall be waterproofed and drained in an approved manner.

ACTING CITY CLERK

~~**416.2.1 Surfaces.** The interior surfaces of spray rooms shall be smooth and shall be so constructed to permit the free passage of exhaust air from all parts of the interior and to facilitate washing and cleaning, and shall be so designed to confine residues within the room. Aluminum shall not be used.~~

416.3.1 Floor. Combustible floor construction in spray rooms shall be covered by approved, noncombustible, non-sparking material, except where combustible coverings, such as thin paper or plastic and strippable coatings are used over noncombustible materials to facilitate cleaning operations.

416.4 Spray booths. The design and construction of spray booths shall be in accordance with this section, *International Fire Code* Sections 1504.1.2.1 through 1504.1.2.6, Sections 1504.2 through 1504.6, and NFPA 33.

416.4.1 Construction. Spray booths shall be constructed of approved noncombustible materials. Aluminum shall not be used. Where walls or ceiling assemblies are constructed of sheet metal, single-skin assemblies shall be no thinner than 0.0478 inch (18 gage) (1.2 mm) and each sheet of double-skin assemblies shall be no thinner than 0.0359 inch (20 gage) (0.9 mm). Structural sections of spray booths are allowed to be sealed with latex-based or similar caulks and sealants.

416.4.2 Surfaces. The interior surfaces of spray booths shall be smooth and shall be constructed so as to permit the free passage of exhaust air from all parts of the interior and to facilitate washing and cleaning, and shall be designed to confine residues within the booth. Aluminum shall not be used.

416.4.3 Floor. Combustible floor construction in spray booths shall be covered by approved, noncombustible, non-sparking material, except where combustible coverings, such as thin paper or plastic and strippable coatings are utilized over noncombustible materials to facilitate cleaning operations.

416.4.4 Means of egress. Means of egress shall be provided in accordance with Chapter 10.

Exception: Means of egress doors from premanufactured spray booths shall not be less than 30 inches (762 mm) in width by 80 inches (2032 mm) in height.

416.4.5 Clear space. Spray booths shall be installed so that all parts of the booth are readily accessible for cleaning. A clear space of not less than 3 feet (914 mm) shall be maintained on all sides of the spray booth. This clear space shall be kept free of any storage or combustible construction.

Exceptions:

1. Spray booths are permitted to be located closer than 3 feet (914 mm) from or directly against an interior partition, wall or floor/ceiling assembly that has a fire-resistance rating of not less than 1 hour, provided the spray booth can be adequately maintained and cleaned.
2. Spray booths are permitted to be located closer than 3 feet (914 mm) from an exterior wall or a roof assembly provided the wall or roof is constructed of noncombustible material and provided the spray booth can be adequately maintained and cleaned.

416.4.6 Size. The aggregate area of spray booths in a building shall not exceed the lesser of 10 percent of the area of any floor of a building or the basic area allowed for a Group H-2 occupancy without area increases. The area of an individual spray booth in a building shall not exceed the lesser of the aggregate size limit or 1,500 square feet (139 m^2).

Exception: One individual booth not exceeding 500 square feet (46 m^2).

((~~**416.3 Spraying spaces.** Spraying spaces shall be ventilated with an exhaust system to prevent the accumulation of flammable mist or vapors in accordance with the *International*~~

ACTING CITY CLERK

~~*Mechanical Code.* Where such spaces are not separately enclosed, noncombustible spray curtains shall be provided to restrict the spread of flammable vapors.~~

~~**416.3.1 Surfaces.** The interior surfaces of spraying spaces shall be smooth and continuous without edges, and shall be so constructed to permit the free passage of exhaust air from all parts of the interior and to facilitate washing and cleaning, and shall be so designed to confine residues within the spraying space. Aluminum shall not be used.~~

~~**416.4 Fire protection.** An automatic fire-extinguishing system shall be provided in all spray, dip and immersing spaces and storage rooms, and shall be installed in accordance with Chapter 9.~~))

416.5 Ventilation. Mechanical ventilation of spraying areas shall be provided in accordance with Section 510 of the *International Mechanical Code* and the *International Fire Code.*

416.5.1 Recirculation. Air exhausted from spraying operations shall not be recirculated.

Exceptions:

1. Air exhausted from spraying operations is permitted to be recirculated as makeup air for unmanned spray operations provided that:
   - 1.1. The solid particulate has been removed.
   - 1.2. The vapor concentration is less than 25 percent of the LFL.
   - 1.3. Approved equipment is used to monitor the vapor concentration.
   - 1.4. When the vapor concentration exceeds 25 percent of the LFL, the following shall occur:
     - a. An alarm shall sound; and
     - b. Spray operations shall automatically shut down.
   - 1.5. In the event of shutdown of the vapor concentration monitor, 100 percent of the air volume specified in *International Fire Code* Section 1504.2 shall be automatically exhausted.

ACTING CITY CLERK

2. Air exhausted from spraying operations is permitted to be recirculated as makeup air to manned spraying operations where all of the conditions provided in Exception 1 are included in the installation, and documents have been prepared to show that the installation does not pose a life safety hazard to personnel inside the spray booth, spray space or spray room.

416.5.2 Air velocity. Ventilation systems shall be designed, installed and maintained so that the average air velocity over the open face of the booth, or booth cross sectional in the direction of air flow during spraying operations, shall not be less than 100 linear feet per minute (51 m/s).

416.5.3 Independent ducts. Each spray booth and spray room shall have an independent exhaust duct system discharging to the outside.

Exceptions:

1. Multiple spray booths having a combined frontal area of 18 square feet (1.67 m^2) or less are permitted to have a common exhaust when identical spray-finishing material is used in each booth. If more than one fan serves one booth, fans shall be interconnected so that all fans operate simultaneously.
2. Where treatment of exhaust is necessary for air pollution control or for energy conservation, ducts shall be allowed to be manifolded if all of the following conditions are met:
   - 2.1. The sprayed materials used are compatible and will not react or cause ignition of the residue in the ducts.
   - 2.2. Nitrocellulose-based finishing material shall not be used.
   - 2.3. A filtering system shall be provided to reduce the amount of overspray carried into the duct manifold.

ATTACHED CITY CLERK

2.4. Automatic sprinkler protection shall be provided at the junction of each booth exhaust with the manifold, in addition to the protection required by this chapter.

416.5.4 Termination point. The termination point for exhaust ducts discharging to the atmosphere shall not be less than the following distances:

1. Ducts conveying explosive or flammable vapors, fumes or dusts: 30 feet (9144 mm) from the property line; 10 feet (3048 mm) from openings into the building; 6 feet (1829 mm) from exterior walls and roofs; 30 feet (9144 mm) from combustible walls or openings into the building which are in the direction of the exhaust discharge; 10 feet (3048 mm) above adjoining grade.
2. Other product-conveying outlets: 10 feet (3048 mm) from the property line; 3 feet (914 mm) from exterior walls and roofs; 10 feet (3048 mm) from openings into the building; 10 feet (3048 mm) above adjoining grade.
3. Environmental air duct exhaust: 3 feet (914 mm) from the property line; 3 feet (914 mm) from openings into the building.

416.6 Illumination. Where spray areas, spray rooms or spray booths are illuminated through glass panels or other transparent materials, only fixed lighting units shall be used as a source of illumination.

416.6.1 Glass panels. Panels for light fixtures or for observation shall be of heat-treated glass, wired glass or hammered-wire glass and shall be sealed to confine vapors, mists, residues, dusts and deposits to the spraying area. Panels for light fixtures shall be separated from the fixture to prevent the surface temperature of the panel from exceeding 200° F (93° C).

416.6.2 Exterior fixtures. Light fixtures attached to the walls or ceilings of a spray area, but which are outside of any classified area and are separated from the spray area by vapor-

ACTIONS CITY CLERK

tight glass panels, shall be suitable for use in ordinary hazard locations. Such fixtures shall be serviced from outside the spray area.

416.6.3 Integral fixtures. Light fixtures that are an integral part of the walls or ceiling of a spray area are allowed to be separated from the spray area by glass panels that are an integral part of the fixture. Such fixtures shall be listed for use in Class I, Division 2 or Class II, Division 2 locations, whichever is applicable, and also shall be suitable for accumulations of deposits of combustible residues. Such fixtures are allowed to be serviced from inside the spraying area.

416.7 Fire protection. Spray booths and spray rooms shall be protected by an approved automatic fire-extinguishing system complying with Chapter 9 of the *International Fire Code* which shall also protect exhaust plenums, exhaust ducts and both sides of dry filters when such filters are used.

Section 38. New Sections 419 through 424 are added to the Seattle Building Code, 2003 Edition, to read as follows:

[W] SECTION 419

GROUP LC

419.1 General. Occupancies in Group LC shall comply with the provisions of this section and other applicable provisions of this code.

419.2 Area and height. Buildings classified as Group LC shall not exceed, in area or height, the limitations set forth in Table 503 for Group R-2 Occupancies.

EXCEPTION: Occupancies in Group LC licensed for six or fewer clients may be of unlimited area provided they are limited to 3 stories or less.

419.3 Exterior walls. For the purpose of determining required exterior wall and opening protection, LC Occupancies licensed for six or fewer clients shall comply with provisions for

ACTING CITY CLERK

Group R-3 Occupancies; and all other LC Occupancies shall comply with provisions for Group R-2 Occupancies.

419.4 Mixed occupancies. The code provisions applicable to Group R-2 Occupancies shall apply to Group LC Occupancies for purposes of determining whether a building is permitted to comply with Section 302.3.1, Nonseparated Uses. Where the provisions of Section 302.3.2 are applied, occupancies in Group LC shall be separated from Group H Occupancies by a four-hour fire-resistance-rated fire barrier and shall be separated from all other occupancies by a one-hour fire-resistance-rated fire barrier.

EXCEPTIONS:

1. A separation need not be provided between a Group LC Occupancy licensed for 16 or fewer clients and a carport having no enclosed use above, provided the carport is entirely open on two or more sides.
2. Private garages shall be separated from Group LC Occupancies and their attic areas by means of a minimum 1/2-inch (12.7 mm) gypsum board applied to the garage side. Garages beneath habitable rooms shall be separated from all habitable rooms above by not less than 5/8-inch Type-X gypsum board or equivalent. Door openings between private garages and Group LC Occupancies shall be equipped with either solid wood doors, or solid or honeycomb core steel doors not less than 1 3/8 inches (34.9 mm) thick, or doors in compliance with Section 715.3.3. Openings from a private garage directly into a room used for sleeping purposes shall not be permitted.
3. An occupancy separation need not be provided between a Group LC, Boarding Home Occupancy and a Group R-2 Occupancy.

419.5 Evacuation capability. Evacuation capability is the ability of the clients of a licensed care facility to respond to an emergency situation and either evacuate a building or move to a point of safety. Clients shall be classified in one of the following levels:

ACTING CITY CLERK

I - Persons physically and mentally capable of walking or traversing a normal path to safety, including the ascent and descent of stairs, and capable of self-preservation, without the physical assistance of another person.

II - Persons physically and mentally capable of traversing a normal path to safety with the use of mobility aids, but unable to ascend or descend stairs without the physical assistance of another person.

III - Persons physically or mentally unable to walk or traverse a normal path to safety without the physical assistance of another person.

419.6 Location of sleeping rooms. In every Group LC facility, all sleeping rooms occupied by clients with an evacuation capability of II or III shall be located on a grade level floor which provides not less than two means of egress which do not require clients to use stairs, elevator, or platform lift to exit the facility.

EXCEPTIONS:

1. In a Group LC Occupancy licensed to provide care to two or fewer clients with an evacuation capability of II or III and six or fewer total clients, only one means of egress which does not require clients to use stairs, elevator or platform lift to exit the facility need be provided.
2. Sleeping rooms for clients with an evacuation capability of II or III may be located on floors other than at grade level, provided the facility is divided into at least two compartments by smoke barriers.

419.7 Means of egress. Means of egress, including provisions for emergency escape and rescue, shall be provided as specified in Chapter 10. For requirements of Chapter 10, Group LC Occupancies licensed for six or fewer clients shall comply with provisions for Group R-3 Occupancies; and all other Group LC Occupancies shall comply with provisions for Group R-2 Occupancies.

MISSOULA CITY CLERK

EXCEPTIONS:

1. Means of egress illumination required by Section 1006 need not be provided in any Group LC Occupancy licensed for six or fewer clients.
2. In LC Occupancies with an approved automatic fire sprinkler system and approved automatic fire alarm system, waiting and resting areas may be open to the corridor provided:
   - 2.1 Each rest area does not exceed 150 square feet, excluding the corridor width; and
   - 2.2 Walls defining the space shall continue the construction of the corridor's wall; and
   - 2.3 The floor on which the rest area or areas are located is divided into at least two compartments by smoke barriers; and
   - 2.4 Combustible furnishings located within the rest area are flame resistant as defined by Section 802; and
   - 2.5 Emergency means of egress lighting is provided as required by Section 1006 to illuminate the area.

419.8 Accessibility. In new construction, Group LC Occupancies, regardless of the number of clients, shall comply with accessibility standards for Group R-2 apartment buildings or dormitories as specified in Chapter 11.

Where an occupancy in Group LC is being established by change of occupancy in an existing building, the building shall be altered to comply with apartment building or dormitory provisions of Chapter 11 if any client is a person with disability. The alterations shall provide the minimum necessary access appropriate for the disabilities of clients. Any alteration, whether to accommodate a client with disability or for another purpose, shall comply with Section 3406.

419.9 Lighting. Occupancies in Group LC shall be provided with light as required by Section 1205 for dwelling units and exterior stairways serving dwelling units.

419.10 Ventilation. Occupancies in Group LC shall comply with provisions for Group R Occupancies as provided in the Washington State Ventilation and Indoor Air Quality Code.

419.11 Ceiling heights. Habitable rooms, hallways, corridors, bathrooms, toilet rooms, laundry rooms and basements shall have a ceiling height of not less than 7 feet (2134 mm). The required height shall be measured from the finished floor to the lowest projection from the ceiling.

EXCEPTIONS:

1. In one- and two-family dwellings, beams or girders spaced not less than 4 feet (1219 mm) on center and projecting not more than 6 inches (152 mm) below the required ceiling height.
2. If any room in a building has a sloped ceiling, the prescribed ceiling height for the room is required in one-half the area thereof. Any portion of the room measuring less than 5 feet (1524 mm) from the finished floor to the ceiling shall not be included in any computation of the minimum area thereof.
3. Mezzanines constructed in accordance with Section 505.

419.12 Sprinkler systems. An automatic sprinkler system installed in accordance with Section 903.2.5.2 shall be provided throughout all buildings with a Group LC fire area.

EXCEPTION: An automatic sprinkler system need not be installed if the licensed care facility is licensed for six or fewer clients.

419.13 Fire alarm systems. Group LC Occupancies licensed for more than 16 clients shall be provided with an approved manual and automatic fire alarm system complying with NFPA 72.

ACTING CITY CLERK

419.14 Single- and multiple-station smoke alarms. Listed single- and multiple-station smoke alarms shall be installed in accordance with the provisions of this code and the household fire-warning equipment provisions of NFPA 72.

419.14.1 Where required. Single- or multiple-station smoke alarms shall be installed and maintained in Group LC, regardless of occupant load at all of the following locations:

1. On the ceiling or wall outside of each separate sleeping area in the immediate vicinity of bedrooms.
2. In each room used for sleeping purposes.
3. In each story, including basements but not including crawl spaces and uninhabitable attics. In buildings with split levels and without an intervening door between the adjacent levels, a smoke alarm installed on the upper level shall suffice for the adjacent lower level provided that the lower level is less than one full story below the upper level.

419.14.2 Power source. In new construction, required smoke alarms shall receive their primary power from the building wiring where such wiring is served from a commercial source and shall be equipped with a battery backup. Smoke alarms shall emit a signal when the batteries are low. Wiring shall be permanent and without a disconnecting switch other than as required for overcurrent protection.

419.14.3 Interconnection. Where more than one smoke alarm is required to be installed within an individual Group LC Occupancy, the smoke alarms shall be interconnected in such a manner that the activation of one alarm will activate all of the alarms in the Group LC Occupancy. The alarm shall be clearly audible in all bedrooms over background noise levels with all intervening doors closed.

419.14.4 Additions, alterations or repairs. When the valuation of an addition, alteration or repair to a Group LC Occupancy exceeds $1,000 and a permit is required, or when one

ACTING CITY CLERK

or more sleeping rooms is added or created in an existing Group LC Occupancy, smoke alarms shall be installed in accordance with Sections 419.14.1 and 419.14.2.

EXCEPTION: Repairs to the exterior surfaces are exempt from the requirements of this section.

419.15 Sanitation.

419.15.1 General. Sanitation facilities shall comply with Chapter 29 and the provisions of this section. Any room in which a water closet is located shall be separated from food preparation or storage rooms by a self-closing tight-fitting door.

419.15.2 Group LC Occupancies with six or fewer clients. Group LC Occupancies licensed for six or fewer clients shall be provided with not less than one water closet, one lavatory and one bathtub or shower.

419.15.3 Group LC Occupancies with more than six clients. Group LC Occupancies licensed for more than six clients shall provide not less than one water closet for each 10 male clients, or fractional part thereof, and not less than one water closet for each 8 female clients, or fractional part thereof.

In addition, not less than one lavatory shall be provided for each 12 male clients, or fractional part thereof, and not less than one lavatory for each 12 female clients, or fractional part thereof. Where the number of clients of either sex exceeds 12, one lavatory shall be added for each additional 20 males, or fractional part thereof, and one lavatory shall be added for each additional 15 females, or fractional part thereof.

In addition, not less than one bathtub or shower shall be provided for every eight clients, or fractional part thereof. Where there are female clients, one additional bathtub or shower shall be provided for each 30 female clients, or fractional part thereof. Where the number of total clients exceeds 150, one bathtub or shower shall be provided for each 20 clients, or fractional part thereof, over 150 clients.

ACTING CITY CLERK

419.16 Concealed spaces. Fireblocking and draftstopping shall be installed in occupancies in Group LC in accordance with the provisions of Section 717 applicable to Group R-2.

SECTION 420

GROUP R

420.1 Walls of dwelling units and sleeping units. Walls separating dwelling units in the same building, and walls separating sleeping units in Group R-1 hotel occupancies, R-2 occupancies and I-1 occupancies shall be constructed as fire partitions complying with Section 708.

420.2 Soffits of dwelling units and sleeping units. Roof-ceiling soffits in dwelling units and sleeping units shall be provided with a minimum of 1/2-inch gypsum wallboard in buildings of Types IIB, IIIB and VB construction.

420.3 Security from criminal activity in Group R.

420.3.1 Group R Occupancies other than One- and Two-family dwellings.

420.3.1.1. General. Section 420.3 applies to all housing units except one- and two-family dwellings.

420.3.1.2. Definition. For the purposes of this section, "housing unit" is any dwelling unit or guest room.

420.3.1.3. Building entrance doors and locks. Building entrance doors shall be without openings and shall be as capable of resisting forcible entry as a flush solid core wood door 1-3/8 inches thick.

EXCEPTIONS:

1. Building entrance doors may have visitor-observation ports which do not impair the fire resistance of the door.
2. Main entrance doors may be framed or unframed non-shattering glass, framed 1/4-inch plate glass or other security glazing.

3. Building entrance doors other than main entrance doors may have glazed openings. Glazed openings shall have wire, grilles or security glazing to prevent operation of the door latch from outside by hand or instrument.

Building entrance doors shall be self-closing, self-locking and equipped with a dead-locking latch bolt with at least a 1/2-inch throw which shall penetrate the striker at least 1/4 inch.

EXCEPTIONS:

1. Building entrance doors that open directly into a housing unit shall comply with Section 420.3.1.5 below.
2. Garage-to-building doors need not be self-locking when the garage-to-exterior door is equipped with an electrically-operated remote control device for opening and automatically closing.
3. When either the garage-to-exterior doors or garage-to-building doors are equipped for self-closing and self-locking, the other need not be so equipped.

420.3.1.4. Locks. All exit doors, including those from individual housing units, shall be openable from the interior without use of keys or special knowledge or effort.

420.3.1.5. Housing unit doors and locks. Doors from interior corridors to individual housing units shall not have glass openings and shall be as capable of resisting forcible entry as a flush solid core wood door 1-3/8 inches thick.

Every entrance door to a housing unit shall have a dead bolt or dead-locking latch bolt with at least a 1/2-inch throw which penetrates the striker not less than 1/4 inch. In hotels and other multi-unit buildings that provide housing for rent on a daily or weekly basis, every entrance door to a housing unit shall also be provided with a chain door guard or barrel bolt on the inside.

420.3.1.6. Observation ports. Every entrance door to a housing unit, other than transparent doors, shall have a visitor-observation port. The port shall not impair the fire resistance of the door. Observation ports shall be installed not less than 54 inches and not more than 66 inches above the floor.

420.3.1.7. Non-exit doors. Doors to storage, maintenance and building service rooms shall be self-closing and self-locking.

420.3.1.8. Sliding doors. Dead bolts or other approved locking devices shall be provided on all sliding doors. These locks shall be installed so that the mounting screws for the lock cases are inaccessible from the outside.

420.3.1.9. Windows. Openable windows shall have operable inside latching devices.

EXCEPTION: Windows whose sills are located 10 feet or more above grade, or 10 feet or more above a deck, balcony or porch that is not readily accessible from grade except through a housing unit need not have operable inside latching devices.

420.3.1.10. Alternate security devices. Subject to the approval of the building official, alternate security devices may be substituted for those required by this section if they have equal capability to resist illegal entry. The installation of the device must not conflict with other requirements of this code and other ordinances regulating the safety of exiting.

420.3.2 One- and Two-family dwellings. One- and two-family dwellings shall comply with Section 420.3.2

420.3.2.1. Building entrance locks. Building entrance doors, including garage doors, shall be capable of locking. They shall be equipped with a dead-locking latch bolt with at least a 1/2-inch throw which penetrates the striker not less than 1/4 inch. Building entrance doors shall be openable from the inside without use of a key or special knowledge or effort.

EXCEPTION: Garage-to-exterior doors may be equipped with an electronically-operated remote control device for opening and closing in lieu of a dead-locking latch bolt. When garage-to-exterior doors are equipped with remote control devices, garage-to-building doors need not be capable of locking.

420.3.2.2. Observation ports. Every building entrance door, other than garage doors, shall have a visitor observation port or glass side light. Observation ports shall be installed at a height of not less than 54 inches and not more than 66 inches from the floor.

420.3.2.3. Windows and sliding doors. Dead bolts or other approved locking devices shall be provided on all sliding doors and openable windows. The lock shall be installed so that the mounting screws for the lock case are inaccessible from the outside.

EXCEPTION: Windows whose sills are located 10 feet or more above grade, or 10 feet or more above a deck, balcony or porch that is not readily accessible from grade except through a housing unit need not have operable inside latching devices.

420.4.4. Alternate security devices. Subject to the approval of the building official, alternate security devices may be substituted for those required by this section. Alternate devices must have equal capability to resist illegal entry. The installation of the device must not conflict with other requirements of this code and other ordinances regulating the safety of exiting.

SECTION 421

WATERFRONT STRUCTURES: PIERS, WHARVES AND BUILDINGS

421.1 General.

421.1.1 Scope. Waterfront structures shall be subject to all of the requirements of this code relating to other structures except as limited by, added to, or otherwise specified in

this Section 421. Unless otherwise specified, all wood dimensions are nominal size as defined in Section 2302.

EXCEPTION: Fire-resistance-rated walls as specified in Section 421.6.6 may be used as one-hour fire-resistance-rated fire barriers and as a separation between repair garages not classified as Group S-1 and occupancies in Group A, including the specified opening protection in buildings of Types IIB, IV and VB construction.

See also Chapter 46 of the Seattle Fire Code.

421.1.2 Definitions. For the purposes of this chapter, certain terms are defined as follows:

COVERED BOAT MOORAGE is a pier or system of floating or fixed accessways to which vessels on water may be secured, 50 percent or more of which is covered by a roof.

DOCK is a natural open or artificially closed basin in which vessels may remain afloat when berthed at a wharf or pier.

PIER is a structure, usually of greater length than width, of timber, stone, concrete or other material, having a deck and projecting from the shore into waters so that vessels may be moored alongside for loading, unloading, storage, repairs or commercial uses.

SUBSTRUCTURE is that portion of the construction below and including the deck immediately above the water.

SUPERSTRUCTURE is that portion of construction above the deck.

Exception: Covered boat moorage.

WATERFRONT STRUCTURE is a structure with at least 20 percent or 8,000 square feet (743 m^2), whichever is greater, of its area over water.

WHARF OR QUAY is a structure of timber, stone, concrete or other material having a platform built along and parallel to waters so that vessels may be moored alongside for loading, unloading, storage, repair or commercial uses.

ACTING CITY CLERK

421.2 Allowable area and height for waterfront structures. The height of structures to be built over water shall be measured from the elevation of ordinary high water as provided in Title 23 of the Seattle Municipal Code Sections 23.60.952 and 23.60.930 for Shoreline Districts. Height and area shall comply with the requirements of Table 503, except that the increases allowed in Section 507.1 and 507.2 are not applicable to waterfront structures.

EXCEPTIONS:

1. In covered boat moorages, the areas in Table 503 may be increased not more than 400 percent when an approved automatic sprinkler system is provided throughout.
2. Each covered area of a boat moorage may be considered as a separate building subject to the following conditions:
   - 2.1. Maximum individual areas shall be 8,000 square feet (743 m^2). The maximum width of connecting walkways shall be 10 feet (3048 mm).
   - 2.2. Walkways, finger piers and other decked areas shall not exceed 30 percent of the area of the roof that extends over water.
   - 2.3. Covered areas shall be separated by not less than 16 feet (4877 mm). The intervening areas may be used for moorage provided the adjacent covered areas comply with Item 2.4 below.
   - 2.4. Covered roof areas constructed in such manner that would trap smoke or hot gases shall be provided with the following:
     - 2.4.1 Vents or monitors of not less than 5 percent of the roof area.
     - 2.4.2 A draft stop of splined or tongue-and-groove planking not less than 1 inch (25 mm) in thickness, 1/2-inch (13 mm) exterior-type plywood or 26 gauge steel shall extend across the end of each roof area when such roof is closer than 30

ACTING CITY CLERK

feet (9144 mm) to an adjacent building. The draft stop shall extend to not less than 24 inches (610 mm) below the lower edge of the roof. A draft stop constructed in accordance with Section 421.5 shall be provided under the walkway at each location where draft stops are required at the end of roofed areas.

421.3 Accessory uses. Uses accessory to the principal occupancy shall be permitted, provided they are conducted in an area separated from the moorage area by not less than 16 feet (4877 mm) and the exposed side of the moorage area is protected by a one-hour fire-resistance-rated fire barrier extending 2-1/2 feet (762 mm) above the roof line. One-story superstructures shall be permitted for accessory uses but shall not exceed 1,000 square feet (93 m^2) in area nor 20 feet (6096 mm) in height.

EXCEPTION: Storage shall be allowed in the moorage area, provided it conforms to the following:

1. There may be one unprotected moorage equipment locker of not more than 150 cubic feet (115 m^3) for each slip.
2. Where groups of three or more lockers are provided, they shall be separated from each other with one-hour fire-resistance-rated fire partitions, and openings in the separation shall have one-hour protection.
3. Storage of flammable liquids shall be in accordance with NFPA Standard 31 and the Fire Code.

421.4 Location on property. Exterior walls shall have fire resistance and opening protection as determined by Section 704.

EXCEPTIONS:

ACTING CITY CLERK

1. Fire resistance-rated construction and opening protection required because of proximity to property lines may be omitted for waterfront structures that are located on the same property, separated by an unobstructed deck not less than 16 feet (4877 mm) wide, and that have a draft stop constructed according to Section 421.5.2 installed in the substructure between the buildings.
2. In covered boat moorages, exterior walls which are built entirely over water may be of tongue-and-groove or splined planks not less than 2 inches (51 mm) in thickness, covered with 26 gauge sheet metal, 3/8-inch (9.5 mm) exterior type plywood or equivalent on both sides, regardless of proximity to property lines. Walls at the substructure may be constructed as specified in Subsection 421.5.2 for draft stops. Where such walls (even though part of such covered boat moorage) are built on land, this exception shall not apply.

421.5 Substructure.

421.5.1 Construction. Substructures may be of any type of construction permitted in this code subject to the area limitations of Section 421.2, except that, when constructed of wood, the members shall not be less than the following in any dimension, exclusive of piling:

Member	Size Unlimited Use × 25.4 for mm	Piers for Boat Moorage Only, Not Exceeding 10 feet (3048 mm) in Width × 25.4 for mm
Caps and girders	8"	6"
Joists, beams and other members	4"	3"
Flooring or deck	3" T & G or splined or 4" square edged	2"
Bracing	3"	2"

If the flooring or deck is under a roof or is used for parking, there shall be applied over the flooring or deck a tight-fitting wearing surface of softwood not less than 2 inches (51 mm)

ACTING CITY CLERK

thick and not more than 6 inches (152 mm) wide, 1-inch (25 mm) thick hardwood, 2-inch (51 mm) thick asphaltic concrete or other material of equivalent fire resistance.

EXCEPTION: Covered piers used for moorage only need not have a wearing surface.

421.5.2 Draft stops. Draft stops shall be installed in all substructures constructed of combustible materials, exclusive of piling and pile bracing. They shall be placed not more than 100 feet (2540 mm) apart measured along the main axis of the pier or wharf. They shall fit tightly around all joists, beams, etc., and extend from the underside of the deck to city datum if over salt water or to low water if over fresh water. See Section 421.6.7 for draft stops in superstructures.

Substructure draft stops shall be constructed of at least two layers of lumber not less than 2 inches (51 mm) in thickness laid with broken joints or materials of equal fire resistance.

421.6 Superstructure.

421.6.1 Construction. Superstructures may be of any type of construction permitted by this code subject to the height and area limitations of Section 421.2 and the requirements of this section.

421.6.2 Floors. See Section 421.5.

421.6.3 Exterior walls. Exterior walls of Types IIA, IIB, III, IV and V buildings, when not subject to the requirements of Section 421.4 because of their proximity to property lines, may be constructed of matched or lapped lumber not less than 2 inches (51 mm) thick and not more than 6 inches (153 mm) wide, or not less than 1 inch (25 mm) thick with a weather covering of noncombustible material applied directly to the wood. Fireblocking shall be required as specified in Section 717. Openings in exterior walls shall be protected by a fire assembly having a three-fourths-hour fire- protection rating when fire-resistive openings are required by Table 704.8 and 1023.5.2.

421.6.4 Roof coverings. Roof coverings shall be fire-retardant as specified in Chapter 15.

ACTING CITY CLERK

421.6.5 Roof construction. In Type IV buildings the roof may be constructed of corrugated galvanized steel attached directly to wood or steel purlins in lieu of that specified in Section 602.4.

421.6.6 Fire-resistive-rated walls. In Types IIA, IIB, III, IV and V buildings, there shall be at least one fire-resistance-rated wall from the deck to at least 3 feet (914 mm) above the roof for each 500 feet (152 m) of length. Areas greater than 100,000 square feet (9290 m^2) shall be divided with such fire-resistance-rated walls. There shall be a draft stop constructed as specified in Section 421.5.2, installed in the substructure immediately below every required fire-resistance-rated wall when the deck is of combustible materials.

Fire-resistance-rated walls shall be constructed as required for two-hour fire-resistance-rated walls or may consist of at least 2 layers of tongue-and-groove or splined lumber, not less than 2 inches (51 mm) thick and not more than 6 inches (153 mm) wide, with a sheet of not less than No. 26 gauge galvanized steel or 3/8-inch (3.2 mm) exterior type plywood between the two layers, placed vertically with broken joints, or equivalent fire-resistive construction.

Openings in fire-resistance-rated walls shall be protected by opening protectives having a one and one-half hour fire protection rating.

421.6.7 Draft stops. Superstructure draft stops shall be installed as specified in Section 717. Substructure draft stops constructed as specified in Section 421.5.2 shall be installed in line with the superstructure draft stops above.

421.6.8 Means of egress. Means of egress shall be provided as specified in Chapter 10.

EXCEPTIONS:

1. Where two means of egress are required from an occupancy, they shall not terminate on the same open deck.

ACTING CITY CLERK

2. An open deck may be considered an exit court and shall not be less than 10 feet (3048 mm) in width.
3. In Group A Occupancies, the maximum travel distance shall not be more than 75 percent of that specified in Section 1015.
4. Boat moorages that have no sales, service or repair facilities may have a single means of egress not less than 3 feet (914 mm) wide and shall be exempt from the requirements of Section 1015 if a Class I standpipe is provided as specified in Section 421.8.

421.7 Width of piers. Floats, piers and walkways shall provide an aisle not less than 3 feet 6 inches (1067 mm) in width for the purpose of fire department access.

EXCEPTION: Floats, piers and walkways which are less than 40 feet (12 192 mm) in length and which are not open to the public.

421.8 Standpipe systems. Class III standpipe systems in accordance with NFPA 14 shall be provided for piers, wharves, and floats where the hose lay distance from the fire apparatus to the far end of the pier, wharf or float exceeds 150 feet. Piping shall be 6-inch minimum, with 4-inch minimum piping acceptable for the last 100 feet. Approved plastic pipe may be used when installed underwater, or other approved method of protection from fire is provided. Note: Separate Class I and Class II standpipes may be installed in lieu of the combined Class III type standpipe system.

421.8.1 Hose stations. Hose stations on required standpipes shall be provided at spacing not to exceed 100 feet with the first hose station located as close as practicable to the land end of the pier. Each hose station shall have 100 feet of 1½-inch hose mounted on a reel or rack and enclosed within an approved cabinet. A valved 2½-inch fire department hose outlet shall be provided at each hose station. Outlet caps shall have a 1/8-inch predrilled hole for pressure relief and be secured with a short length of chain or cable to prevent

ACTING CITY CLERK

falling after removal. Listed equipment shall be used. Hose stations shall be labeled FIRE HOSE-EMERGENCY USE ONLY.

421.8.2 Freeze protection. Standpipe systems shall be maintained dry when subject to freezing temperatures, and always from November 1 through March 31. The 1½-inch hose stations shall be tagged out-of service when the system is drained. The main water supply control valve shall be readily accessible and clearly labeled so that the system may be quickly restored to full service during periods when the system is drained down.

Exception: Other methods of freeze protection, such as listed freeze valves, may be provided when approved by the fire code official.

421.9 Automatic sprinklers.

421.9.1 Covered boat moorage. Automatic sprinklers shall be provided for covered boat moorage exceeding 500 sq. ft. in projected roof area per pier, wharf or float.

The sprinkler system shall be designed and installed in accordance with NFPA 13 for Extra Hazard Group 2 occupancy.

If sprinklers are required by this section, they shall be extended to any structure on the pier, wharf or float exceeding 500 square feet in projected roof area.

421.9.2 Substructure. Automatic sprinklers shall be installed under the substructure of every new waterfront structure in accordance with NFPA 307 and as specified in Chapter 9.

Exceptions:

1. Combustible substructures whose deck area does not exceed 8,000 square feet (743.2 m 2) supporting no superstructures
2. Combustible substructures whose deck area does not exceed 8,000 square feet (743.2 m 2) supporting superstructures not required to be provided with an approved automatic sprinkler system as specified in Section 421.9.3.
3. Noncombustible substructures with or without superstructures.

ACTING CITY CLERK

4. Substructures, over other than tidal water, where sprinkler heads cannot be installed with a minimum clearance of 4 feet (1219 mm) above mean high water.
5. Substructures resulting from walkways or finger piers which do not exceed 10 feet (3048 mm) in width.

421.9.3 Superstructure. Automatic sprinklers shall be provided in superstructures as specified in Chapter 9.

421.9.4 Monitoring. Sprinkler systems shall be monitored by an approved central station service.

421.10 Fire department connections. Standpipe and sprinkler systems shall be equipped with not less than a two-way 2½-inch fire department connection, which shall be readily visible and located at the fire department apparatus access. See Chapter 46 of the Seattle Fire Code for requirements for fire hydrants.

421.11 Marina fire protection confidence testing. Standpipe and sprinkler systems shall be inspected and tested in compliance with the Seattle Fire Code.

421.12 Fire department access. Fire department apparatus access lanes, not less than 20 feet wide and capable of supporting a 50,000-pound vehicle or 24,000 pounds per axle (HS20 loading), shall be provided and so located as to provide fire department apparatus access to within 50 feet travel distance to the shore end of all piers, wharves and floats.

SECTION 422

PRIVATE AND UTILITY TRANSFORMER VAULTS

422.1 Scope. Vaults housing private and utility transformers shall comply with the provisions of this chapter and Article 450 of the Seattle Electrical Code. The provisions of this chapter

ACTING CITY CLERK

are minimum standards for all transformer vaults. Vaults containing utility transformers or equipment will be required to comply with additional requirements of Seattle City Light.

422.2 Definitions.

PRIVATE TRANSFORMER VAULT. Private transformer vaults are those which contain transformer equipment that is not owned by Seattle City Light or other electric power utility.

UTILITY TRANSFORMER VAULT. Utility transformer vaults are those which contain transformer equipment owned by Seattle City Light or other electric power utility.

422.3 When required.

422.3.1 Utility transformers. Transformer vaults are required for all utility transformers located inside a building. Seattle City Light shall approve the size, location, and layout of all utility vaults.

422.3.2 Private transformers. Transformer vaults are required for all oil-insulated private transformers. Vaults are required for other private transformers rated over 35,000 volts that are located inside a building.

EXCEPTION: Vaults need not be provided for certain oil-insulated private transformers in accordance with Article 450 of the Seattle Electrical Code.

422.4 Access to transformer vaults.

422.4.1 General. At least one opening, which may be a door, hatch or ventilation opening, shall be provided to every vault. The opening shall be adequate in size to permit the installation and removal of the equipment located in the vault, and shall be kept unobstructed at all times. An unobstructed level area shall be provided at the entrance to all vaults. The level area shall be large enough to allow for removal of the transformer.

422.4.2 Utility transformer vaults. Utility transformer vaults shall be located so that there is an equipment access path between the vault and the building exterior. The floor along the path shall be designed to support the weight of the transformer and other equipment. If

AUTHG CITY CLERK

a path is not provided, the building owner shall agree to remove the equipment to the right of way whenever the Superintendent of Seattle City Light determines it is necessary, and the owner shall pay all costs for removal and replacement. All doors between the vault and the building exterior shall be large enough for removal of transformers. See Section 422.7.3 for doorway requirements.

Utility transformer vaults shall be accessible to Seattle City Light personnel at all times. If it is necessary to pass through locked doors to reach a vault, keys to those doors shall be kept in a key box which can be opened with the key to the transformer vault. Persons other than Seattle City Light personnel shall not have access to utility transformer vaults.

422.5 Location of private transformer vaults. Private transformer vaults shall be located where they can be ventilated to the outside air without using flues or ducts wherever such an arrangement is practicable.

422.6 Construction.

422.6.1 Private transformer vaults. All private transformer vaults shall be of at least three-hour fire-resistance-rated construction. The floors of private transformer vaults in contact with the earth shall be of concrete not less than four inches thick.

EXCEPTION: Subject to the approval of the building official, where the total capacity of private oil-insulated transformers does not exceed 112-1/2 kVA, vaults may be constructed of reinforced concrete not less than 4 inches (102 mm) thick.

422.6.2 Utility transformer vaults. Floors, walls and ceilings of utility transformer vaults shall have at least a three-hour fire-resistance rating and shall be constructed of solid concrete or concrete-filled concrete masonry units at least 6 inches (152 mm) thick. Vault floors shall be smooth with no pads and shall slope toward the vault sump. Seismic anchor inserts shall be embedded in the floor when required by the Superintendent of Seattle City

Light. The size of utility transformer vaults shall be as determined by the Superintendent of Seattle City Light.

422.7 Openings into transformer vaults.

422.7.1 Protection of openings. All doorways opening into a transformer vault from the building interior shall be protected by opening protectives having a fire-protection rating equal to that required for the vault. Exterior openings, other than doors and ventilation openings, shall be protected by opening protectives having a three-fourths-hour fire-protection rating when located below openings in another story or when located less than 10 feet (3048 mm) from other doors or windows of the same buildings.

422.7.2 Locks. All doors shall be equipped with locks and shall be kept locked. Doors to utility transformer vaults shall be equipped with locks provided by the utility. Personnel doors shall be equipped with panic bars, pressure plates, or other devices that are normally latched but open under simple pressure.

422.7.3 Doorways. A removable curb 4 inches (103 mm) high, or as high as necessary to contain oil, shall be installed below each door. All doors shall be made of steel and shall swing out of the vault 180 degrees. Equipment access doorways to vaults containing single-phase transformers shall have clear openings at least 42 inches (1067 mm) wide and 6 feet 8 inches (2057 mm) high. Equipment access doorways for all other utility transformers shall be as specified by Seattle City Light. Doorways for personnel access shall have clear openings at least 36 inches (914 mm) wide and 6 feet 8 inches (2057 mm) high.

422.8 Ventilation systems for transformer vaults.

422.8.1 General. Ventilation systems shall be provided to dispose of heat from transformer total losses without creating a temperature rise in excess of the transformer rating.

ACTING CITY CLERK

422.8.2 Method of ventilation. Ventilation shall be provided by either natural circulation or mechanical circulation.

422.8.2.1 Natural circulation. All transformer vaults containing up to three transformers of no more than 75 kVA each may be ventilated by natural circulation. The combined minimum net intake and exhaust area, exclusive of area occupied by screens, grating or louvers, shall not be less than 3 square inches (1935 mm^2) per kVA of transformer capacity. The total required area shall be divided roughly equally between intake and exhaust. In no case shall either the intake or exhaust area be less than 72 square inches (46 452 mm^2).

One-half the total area of required ventilation openings shall be in one or more openings in the lower one-half of the vault walls, at least 18 inches above the garage floor level outside of vaults located in garages, and roughly one-half shall be in one or more openings in the upper one-half of the exterior sidewalls or roof of the vault. Intake openings shall be located on the opposite side of the vault from exhaust openings. Intake openings shall not be located in the ceiling of the vault.

422.8.2.2 Mechanical circulation. Positive or negative pressure ventilation systems shall supply a minimum of 1.6 cfm (.76 L/s) of air per kVA of transformer capacity. The fans shall be installed outside of the vault and shall be controlled by a thermostat located inside the vault. The intake shall be located in the lower one-half of an exterior walls of the vault, at least 18 inches above the garage floor level outside of vaults located in garages, and the exhaust shall be in the roof or ceiling of the vault or in the upper one-half of the sidewalls of the vault. The ventilation system shall cause air to flow longitudinally across the transformers. The ventilation system shall be controlled independently from the rest of the building.

CITY CLERK

For utility transformer vaults, forced air ventilation systems shall be designed by the applicant. The capacity and location of the ventilation system shall be approved by the Superintendent of Seattle City Light. Power for the ventilation system shall be provided by the building owner.

422.8.2.3 Temperature control. A remote temperature controller shall be installed in utility transformer vaults that have mechanical ventilation systems. The controller shall activate the fan when the temperature in the vault exceeds 70 degrees F (21° C), and shall turn the fan off when the temperature reaches 140 degrees F (60° C).

A visible or audible alarm shall be installed outside each utility transformer vault that will be activated if the fan does not operate when the temperature controller calls for ventilation, or if the fan becomes inoperable. A sign shall be mounted near the alarm stating CALL SEATTLE CITY LIGHT WHEN ALARM SOUNDS or CALL SEATTLE CITY LIGHT WHEN LIGHT IS ON.

422.8.3 Ventilation openings and duct terminations. Ventilation openings and duct terminations shall comply with Sections 422.8.3.1 through 422.3.8.4.

422.8.3.1 Location of exhaust ventilation openings and exhaust duct terminations. Unless otherwise approved by the building official, exhaust ventilation openings and duct terminations shall be located not less than 10 feet (3048 mm) from fire escapes, required means of egress, combustible materials, unprotected openings and adjacent property. Exhaust outlets shall be located on the exterior of the building.

422.8.3.2 Covering. Ventilation openings shall be covered with durable metal gratings, screens or louvers. If operable intake louvers are provided on mechanically ventilated transformer vaults, the louvers shall be controlled by the fan thermostat, i.e. the louvers shall be opened when the fan is energized.

ACTING CITY CLERK

422.8.3.3 Opening protection. Intake ventilation openings in the vault walls shall be protected by automatic closing fire dampers having a fire-protection rating at least equal to that required for the vault. The actuating device on the fire damper should be made to function at a temperature of 165 degrees F (92 degrees C).

Exception: A fire damper is not required in exterior walls of buildings where the intake ventilation opening is at least 10 feet (3048 mm) from fire escapes, required means of egress, combustible materials, and unprotected openings.

422.8.3.4 Ventilation ducts. Exhaust ventilation ducts, if used, shall be enclosed in construction having a fire-resistance rating at least equal to that required for the vault. Exhaust ducts shall extend from the vault to the outside of the building. An exhaust duct for a mechanically ventilated vault shall be used exclusively for ventilating the vault. No fire dampers shall be installed in exhaust ventilation ducts.

422.9 Drainage for private transformer vaults.

422.9.1 General. Drains are prohibited in all transformer vaults.

422.9.2 Sumps. All transformer vaults shall have a dry sump. All sumps shall have an opening of at least 12 inches (305 mm) diameter, a depth of at least 12 inches (305 mm), and shall be equipped with a removable metal grate that is flush with the floor. Sumps shall have at least 8 cubic foot (.23 m^3) capacity or as specified by the utility. The sump shall have a grouted bottom. The sump shall be located within reach of the personnel door and out of the entry path for moving transformers in and out of the vault. The vault floor shall slope at least one inch in ten feet (25 mm in 305 mm) toward the sump.

422.10 Pipes and ducts in private transformer vaults. No pipes or ducts foreign to the electrical installation shall enter or pass through any transformer vault. Piping or other facilities provided for fire protection inside the vault or for transformer cooling are deemed not to be foreign to the electrical installation.

ACTING CITY CLERK

422.11 Storage in Private Transformer Vaults. No material shall be stored in any transformer vault.

[F] SECTION 423

MEDICAL GAS SYSTEMS

[F] 423.1 General. Compressed gases at hospitals and similar facilities intended for inhalation or sedation including, but not limited to, analgesia systems for dentistry, podiatry, veterinary and similar uses shall comply with this section and the *International Fire Code*.

[F[423.2 Interior supply location. Medical gases shall be stored in areas dedicated to the storage of such gases without other storage or uses. Where containers of medical gases in quantities greater than the permit amount are located inside buildings, they shall be in a one-hour exterior room, a one hour interior room or a gas cabinet in accordance with Section 423.2.1, 423.2.2 or 423.2.3.

[F[423.2.1 One-hour exterior rooms. A one-hour exterior room is a room or enclosure separated from the remainder of the building by fire barriers with a fire-resistance rating of not less than one hour. Openings between the room or enclosure and interior spaces shall be self-closing smoke- and draft-control assemblies having a fire protection rating of not less than one hour. Rooms shall have at least one exterior wall that is provided with at least two vents. Each vent shall not be less than 36 square inches (0.023 m^2) in area. One vent shall be within 6 inches (152 mm) of the floor and one shall be within 6 inches (152 mm) of the ceiling. Rooms shall be provided with at least one automatic sprinkler to provide container cooling in case of fire.

[F] 423.2.2 One-hour interior room. When an exterior wall cannot be provided for the room, automatic sprinklers shall be installed within the room. The room shall be exhausted through a duct to the exterior. Supply and exhaust ducts shall be enclosed in a one-hour-rated shaft enclosure from the room to the exterior. Approved mechanical ventilation shall

ACTING CITY CLERK

comply with the *International Mechanical Code* and be provided at a minimum rate of 1 cubic foot per minute per square foot [0.00508 $m^3/(s \cdot m^2)$] of the area of the room.

[F] 423.2.3 Gas cabinets. Gas cabinets shall be constructed in accordance with Fire Code Section 2703.8.6 and the following:

1. The average velocity of ventilation at the face of access ports or windows shall not be less than 200 feet per minute (61 m/s) with a minimum of 150 feet per minute (46 m/s) at any point of the access port or window.
2. Gas cabinets shall be connected to an exhaust system.
3. Gas cabinets shall have internal sprinklers.

SECTION 424
RECYCLABLE MATERIALS

424.1 Definition. Recyclable materials are those solid wastes that are separated for recycling or reuse, such as papers, metals and glass.

424.2 Storage space for recyclable materials. All occupancies shall be provided with space for the storage of recyclable materials and solid waste.

EXCEPTION: Group R-3 and Group U Occupancies.

The storage area shall be designed to meet the needs of the occupancy, efficiency of pick-up, and shall be available to occupants and haulers.

Section 39. Subsections 501.1 and 501.2 of the International Building Code, 2003 Edition, are amended as follows:

501.1 Scope. The provisions of this chapter control the height and area of structures hereafter erected and additions to existing structures.

501.2 Premises identification. Approved numbers or addresses shall be provided for new buildings in such a position as to be clearly visible and legible from the street or roadway

ACTING CITY CLERK

fronting the property. Letters or numbers shall be a minimum 3 inches (76 mm) in height for occupancies in Group R-2 and R-3 and not less than 5 inches for other occupancies. ((~~and stroke of~~)) Letters and numbers shall have a minimum stroke of 0.5 inch (12.7 mm) of a contrasting color to the background itself.

501.2.1 Enforcement by Building Official - Owners to Affix and Maintain Building Numbers. The building official shall determine the address of any property in the City in accordance with the numbering system established in this Chapter.

Whenever the irregularity of plats, the changing direction of streets, avenues, or other highways, the interruption of the continuity of highways or any other condition causes doubt or difference of opinion as to the correct number of any piece of property or any building thereon, the number shall be determined by the building official. He/she shall be guided by the specific provisions of this chapter as far as they are applicable and when not applicable by such rules as may be established to carry out the intent of this chapter.

The owner of any building or other structure shall maintain the street number of each building and structure in a conspicuous place over or near the principal street entrance or entrances, or in other conspicuous places as is necessary for the easy locating of such address.

EXCEPTION: Where there are multiple buildings on a site, the building official may waive the requirement for posting an address on appurtenant or accessory buildings where individual identification of each building is not essential.

Where a property has frontage along more than one named street or for any other property where there may be confusion regarding the address of a building or structure, the building official may require the complete address, including street number and street name to be conspicuously posted.

Buildings served by a private road or a common driveway shall post their address number(s) at the head of the road or driveway in a manner that can be easily read from the intersecting street. Where the existing street grid may not adequately allow for the assignment of street addresses which will promote the easy locating of such addresses, or for any other reason consistent with the intent of this chapter, the building official may assign a name to the private road or common driveway which shall be used for addressing purposes. In addition, one or more property owners along the road or driveway may be required to post a sign displaying the assigned name at a location near the intersection of the road or driveway with a named public street.

Should the building official find that any building, structure or premises are not provided with numbers as herein required, or are not correctly numbered, he/she shall notify the owner, agent or tenant of the correct street number and shall require that the same shall be properly placed, in accordance with the provisions of this chapter, within a reasonable length of time. It is unlawful for any person to fail to comply with such notice.

501.2.2 Numbering System Prescribed. The numerical designation of all doorways and entrances to buildings and lots fronting upon the named right-of-ways of the City are established in accordance with the following system:

Except where otherwise specified, 100 numbers are allotted to each block, provided that where a named right-of-way intervenes between consecutively numbered right-of-ways, 50 numbers shall be allotted for each block; one whole number is allotted to each 20 feet (6096 mm) of frontage in each block; even numbers shall be used on the northerly side of named right-of-ways extending in an easterly and westerly direction and on the easterly side of named right-of-ways extending in a northerly and southerly direction; odd numbers shall be used on the southerly side of named right-of-ways extending in an easterly and westerly

ACTING CITY CLERK

direction and on the westerly side of named right-of-ways extending in a northerly and southerly direction.

In the case of irregular named right-of-ways, the frontages shall be numbered as near as may be according to the uniform series of block numbers with which they most nearly correspond.

501.2.3 Numbering of Buildings

501.2.3.1 Numbering of Buildings Downtown. Between Yesler Way and Denny Way all frontages upon named right-of-ways extending in a northerly and southerly direction and lying west of Broadway, East Union Street, Minor Avenue and Melrose Avenue shall be numbered as follows:

Yesler Way to Fir Street number 100 and upwards, Fir Street to Spruce Street number 150 and upwards, Spruce Street to Alder Street number 200 and upwards, continuing by consecutive hundreds to Pine Street; Pine Street to Olive Way number 1600 and upwards, Olive Way to Howell Street number 1700 and upwards, Howell Street to Stewart Street number 1800 and upwards, Stewart Street to Virginia Street number 1900 and upwards, continuing by consecutive hundreds to Denny Way.

Between East Yesler Way and East Denny Way all frontages upon named right-of-ways extending in a northerly and southerly direction and lying east of Broadway, East Union Street, Minor Avenue and Melrose Avenue shall be numbered as follows:

East Yesler Way to East Fir Street number 100 and upwards, East Fir Street to East Spruce Street number 150 and upwards, East Spruce Street to East Alder Street number 200 and upwards, continuing by consecutive hundreds to East Marion Street; East Marion Street to East Spring Street number 900 and upwards, East Spring Street to East Union Street number 1100 and upwards, East Union Street to East Pike Street number 1400 and upwards, continuing by consecutive hundreds to East Denny Way.

ACTING CITY CLERK

Between East Yesler Way and East Denny Way all frontages upon named right-of-ways extending in an easterly and westerly direction and lying west of Broadway, East Union Street, Minor Avenue and Melrose Avenue shall be numbered as follows:

Southwesterly from Elliott Avenue, or Alaskan Way if south of Lenora Street, number 51 and downwards; Elliott Avenue (or Alaskan Way) to Western Avenue number 52 and upwards; Western Avenue to First Avenue number 76 and upwards; First Avenue to Second Avenue number 100 and upwards, continuing northeasterly to Broadway, East Union Street, Minor Avenue, or Melrose Avenue by consecutive hundreds.

Between East Yesler Way and East Denny Way all frontages upon named right-of-ways extending in an easterly and westerly direction and lying east of Broadway, East Union Street, Minor Avenue and Melrose Avenue shall be numbered as follows:

Melrose Avenue to Bellevue Avenue number 300 and upwards, Bellevue Avenue to Summit Avenue number 400 and upwards, continuing by consecutive hundreds to Broadway.

Broadway to Tenth Avenue number 900 and upwards, Tenth Avenue to Eleventh Avenue number 1000 and upwards, continuing by consecutive hundreds corresponding with the numbered series of avenues eastward to Lake Washington.

On East Olive Way eastward from Melrose Avenue, the street numbers shall run upwards consecutively, eastward from the existing street numbers which are west of the Melrose Avenue intersection.

501.2.3.2 Numbering of Buildings South of Downtown and East of the East Waterway. South of Yesler Way the frontages upon the named right-of-ways extending in a northerly and southerly direction shall be numbered as follows:

ACTING CITY CLERK

Yesler Way (or East Yesler Way) to South Washington Street number 100 and upwards, South Washington Street to South Main Street number 200 and upwards, South Main Street to South Jackson St number 300 and upwards, South Jackson Street to South King Street number 400 and upwards, continuing by consecutive hundreds to South Barton Place, with blocks and streets on Rainier Avenue South being taken as the controlling series.

South of South Barton Place, 51st Avenue South shall be taken as the controlling series to the southern City limits.

On Second Avenue Extension South from Fourth Avenue South to Yesler Way, the frontages shall be numbered as follows:

From Fourth Avenue South to South Jackson Street number 100 and upwards, South Jackson Street to South Main Street number 200 and upwards, South Main Street to South Washington Street number 300 and upwards, South Washington Street to Yesler Way number 400 and upwards.

South of Yesler Way the frontages upon named right-of-ways extending in an easterly and westerly direction shall be numbered as follows:

Westward from First Avenue South to the Harbor Line or East Waterway number 99 and downwards, First Avenue South to Occidental Avenue South number 100 and upwards, Occidental Avenue South to Second Avenue South number 150 and upwards, Second Avenue South to Third Avenue South number 200 and upwards, continuing by consecutive hundreds to Sixth Avenue South; Sixth Avenue South to Maynard Avenue South number 600 and upwards, Maynard Avenue South to Seventh Avenue South number 650 and upwards, Seventh Avenue South to Eighth Avenue South (or Airport Way south of South Hinds Street) number 700 and upwards, Eighth Avenue South (or Airport Way south of South Hinds Street) to Airport Way South (or Ninth Avenue

ACTING CITY CLERK

South south of South Hinds Street) number 800 and upwards, Airport Way South (or Ninth Avenue South south of South Hinds Street) to Interstate-5 number 900 and upwards, continuing eastward by consecutive hundreds corresponding with the numbered series of avenues to Lake Washington

501.2.3.3 Numbering of Buildings Between Downtown and the Lake Washington Ship Canal. North of Denny Way, East Denny Way, and East Howell Street east of Madrona Drive the frontages upon the named right-of-ways extending in a northerly and southerly direction shall be numbered as follows:

Denny Way (and East or West Denny Way) to John Street (and East or West John Street) number 100 and upwards, continuing by consecutive hundreds, the blocks and streets on Queen Anne Avenue North being taken as a controlling series for numbering purposes west of Fairview Avenue North (or Fairview Avenue East) and south of Bertona Street (or West Bertona Street); 36th Avenue West being taken as the controlling series for numbering purposes west of Fairview Ave North (or Fairview Ave East) and north of Bertona Street (or West Bertona Street); 10th Avenue East being taken as the controlling series for numbering purposes east of Fairview Avenue North (or Fairview Avenue East).

Between Queen Anne Avenue North and Eastlake Avenue East (East Galer being the northeast boundary of this subsection) the frontages on the named right-of-ways extending in an easterly and westerly direction shall be numbered as follows:

Queen Anne Avenue North to First Avenue North number 1 and upwards, First Avenue North to Warren Avenue North number 100 and upwards, Warren Avenue North to Second Avenue North number 150 and upwards, Second Avenue North to Third Avenue North number 200 and upwards, continuing by consecutive hundreds corresponding to the numbered series of avenues with half hundreds in the case of Nob

ACTING CITY CLERK

Hill, Taylor, Bigelow, Mayfair, and Dexter Avenues North, to Ninth Avenue North; Ninth Avenue North to Westlake Avenue North number 900 and upwards, Westlake Avenue North to Terry Avenue North number 950 and upwards, Terry Avenue North to Boren Avenue North number 1000 and upwards, Boren Avenue North to Fairview Avenue North number 1100 and upwards, Fairview Avenue North to Minor Avenue North number 1150 and upwards, Minor Avenue North to Pontius Avenue North number 1200 and upwards, Pontius Avenue North to Yale Avenue North number 1250 and upwards, Yale Avenue North to Eastlake Avenue East number 1300 and upwards.

East of Eastlake Avenue East (or Fairview Avenue East north of East Galer Street) and North of East Denny Way the frontages upon the named east-west right-of-ways extending in an easterly and westerly direction shall be numbered as follows:

Eastlake Avenue East to Melrose Avenue East number 200 and upwards continuing by consecutive hundreds eastward to Broadway East; Broadway East to Tenth Avenue East number 900 and upwards, Tenth Avenue East to Federal Avenue East number 1000 and upwards, Federal Avenue East to Eleventh Avenue East number 1050 and upwards, Eleventh Avenue East to Twelfth Avenue East number 1100 and upwards, continuing by consecutive hundreds eastward to Lake Washington.

West of Queen Anne Avenue North the frontages upon named east-west right-of-ways extending in an easterly and westerly direction shall be numbered westward as follows:

Queen Anne Avenue North to First Avenue West number 1 and upwards, First Avenue West to Second Avenue West number 100 and upwards, continuing by consecutive hundreds westward

501.2.3.4 Numbering of Buildings North of the Lake Washington Ship Canal. The plan for the numbering of frontages upon the various named right-of-ways in that

ACTING CITY CLERK

portion of the City of Seattle lying north of the Lake Washington Ship Canal is established as follows:

The frontages upon the named right-of-ways extending in a northerly and southerly direction shall be numbered in accordance with the designations of the intersecting numbered streets((,)) as follows: northward from the State Harbor Line, number 2900 and upwards.

The frontages upon the named right-of-ways extending in an easterly and westerly direction shall be numbered as follows:

West from First Avenue Northwest, commencing with 100, and continuing west in correspondence with the numbers of the avenues to Puget Sound.

East from First Avenue Northwest, commencing with 100 and continuing as follows: East from Palatine Avenue North, 200 and upwards; from Greenwood Avenue North, 300 and upwards; from Phinney Avenue North, 400 and upwards; from Francis Avenue North, 450 and upwards; from Dayton Avenue North, 500 and upwards; from Evanston Avenue North, 600 and upwards; from Fremont Avenue North, 700 and upwards; from North Park Avenue North, 800 and upwards; from Linden Avenue North, 900 and upwards (800 and upwards south of North 65th Street); from Aurora Avenue North, 900 and upwards (1100 and upwards north of North 65th Street); from Winslow Place North, 950 and upwards; from Whitman Avenue North 1000 and upwards; from Albion Place North, 1050 and upwards; from Woodland Park Avenue North, 1100 and upwards; from Nesbit Avenue North, 1150 and upwards; from Midvale Avenue North, 1200 and upwards; from Lenora Place North, 1250 and upwards; from Stone Avenue North (Stone Way North south of North 46th Street), 1300 and upwards; from Interlake Avenue North, 1400 and upwards; from Ashworth Avenue North, 1500 and upwards; from Carr Place North, 1550 and upwards; from Woodlawn

ACTING CITY CLERK

Avenue North, 1600 and upwards, from Densmore Avenue North, 1700 and upwards; from Caroline Avenue North and Courtland Place North, 1750 and upwards; from Wallingford Avenue North, 1800 and upwards; from Burke Avenue North and Canfield Place North, 1900 and upwards; From Stroud Avenue North and Wayne Place North, 2000 and upwards; from Meridian Avenue North, 2100 and upwards; from Bagley Avenue North, 2200 and upwards; from Corliss Avenue North, 2300 and upwards; from Sunnyside Avenue North, 2400 and upwards; and from Eastern Avenue North, 2500 and upwards.

East from First Avenue Northeast, commencing with 100, and continuing east in correspondence with the numbered avenues to Lake Washington.

501.2.3.5 Numbering Buildings on Harbor Island. The frontages upon named right-of-ways extending in a northerly and southerly direction shall be numbered as follows:

Southwest Massachusetts Street to Southwest Florida Street, number 1700 and upwards; Southwest Florida Street to Southwest Lander Street, number 2500 and upwards; Southwest Lander Street to Southwest Hanford Street, number 2700 and upwards; Southwest Hanford Street to Southwest Spokane Street, number 3200 and upwards.

The frontages upon named right-of-ways extending in an easterly and westerly direction shall be numbered as follows:

The East Waterway to 11th Avenue Southwest, number 900 and upwards; 11th Avenue Southwest to 13th Avenue Southwest, number 1100 and upwards; 13th Avenue Southwest to 16th Avenue Southwest, number 1300 and upwards; 16th Avenue Southwest to the West Waterway, number 1600 and upwards.

ACTING CITY CLERK

501.2.3.6 Numbering Buildings West of the West Waterway and the Duwamish Waterway. The frontages upon named right-of-ways extending in a northerly and southerly direction, shall be numbered as follows:

North of Southwest Andover Street, commencing with 3800 and continuing north to the Duwamish Head by consecutive hundreds, the blocks and streets on California Avenue Southwest being taken as the controlling series for numbering purposes.

South of Southwest Andover Street, commencing with 4000 and continuing south to Southwest Roxbury Street by consecutive hundreds , the blocks and streets of California Avenue Southwest being taken as the controlling series for numbering purposes.

South of Southwest Roxbury Street, commencing with 9600 and continuing south to the south City limits by consecutive hundreds, in correspondence with the numbers of the intersecting streets.

The frontages upon named right-of-ways extending in an easterly and westerly direction, shall be numbered as follows:

West of California Avenue Southwest, commencing with 4300 and continuing westward in correspondence with the numbers of the intersecting avenues to Puget Sound.

East of California Avenue Southwest, commencing with 4200 and continuing eastward in correspondence with the numbers of the intersecting avenues to the Duwamish Waterway.

Section 40. Subsection 502.1 of the International Building Code, 2003 Edition, is amended as follows:

ACTING CITY CLERK

502.1 Definitions. The following words and terms shall, for the purposes of this chapter and as used elsewhere in this code, have the meanings shown herein.

AREA, BUILDING. The area included within surrounding exterior walls (or exterior walls and fire walls) exclusive of vent shafts and courts. Areas of the building not provided with surrounding walls shall be included in the building area if such areas are included within the horizontal projection of the roof or floor above.

BASEMENT. That portion of a building that is partly or completely below grade plane (See "Story above grade plane" in Section 202). A basement shall be considered as a story above grade plane where the finished surface of the floor above the basement is:

1. More than 6 feet (1829 mm) above grade plane;
2. More than 6 feet (1829 mm) above the finished ground level for more than 50 percent of the total building perimeter; or
3. More than 12 feet (3658 mm) above the finished ground level ((~~at any point~~)) for more than 25 feet (7620 mm) of the perimeter. Required driveways up to 22 feet (6706 mm) shall not be considered in calculating the 25 foot distance if there is at least 10 feet (3048 mm) between the driveway and all portions of the 25-foot area. See Figure 502.1.

GRADE PLANE. A reference plane representing the average of finished ground level adjoining the building at exterior walls. Where the finished ground level slopes away from the exterior walls, the reference plane shall be established by the lowest points within the area between the building and the lot line or, where the lot line is more than 6 feet (1829 mm) from the building, between the building and a point 6 feet (1829 mm) from the building.

For grade of structures built over water, see Section 421.2.

HEIGHT, BUILDING. The vertical distance from grade plane to the average height of the highest roof surface.

ACTING CITY CLERK

HEIGHT, STORY. The vertical distance from top to top of two successive finished floor surfaces; and, for the topmost story, from the top of the floor finish to the top of the ceiling joists or, where there is not a ceiling, to the top of the roof rafters.

INDUSTRIAL EQUIPMENT PLATFORM. An unoccupied, elevated platform in an industrial occupancy used exclusively for mechanical systems or industrial process equipment, including the associated elevated walkways, stairs and ladders necessary to access the platform (see Section 505.5).

MEZZANINE. An intermediate level or levels between the floor and ceiling of any story with an aggregate floor area of not more than ((~~one-third~~)) one-half of the area of the room or space in which the level or levels are located (see Section 505).

STORY. That portion of a building included between the upper surface of a floor and the upper surface of the floor or roof next above (also see "Basement" and "Mezzanine").

Interpretation I502a: An unenclosed and uncovered roof deck shall not be considered a story for the purpose of determining the number of stories in a building.

Interpretation I502b: In stepped or terraced buildings, the number of stories is the number counted from the first story above grade plane of the lowest building segment to the top story of the highest building segment. For purposes of this interpretation, portions of buildings divided by fire walls shall be considered separate buildings.

ACTING CITY CLERK

Figure 502.1

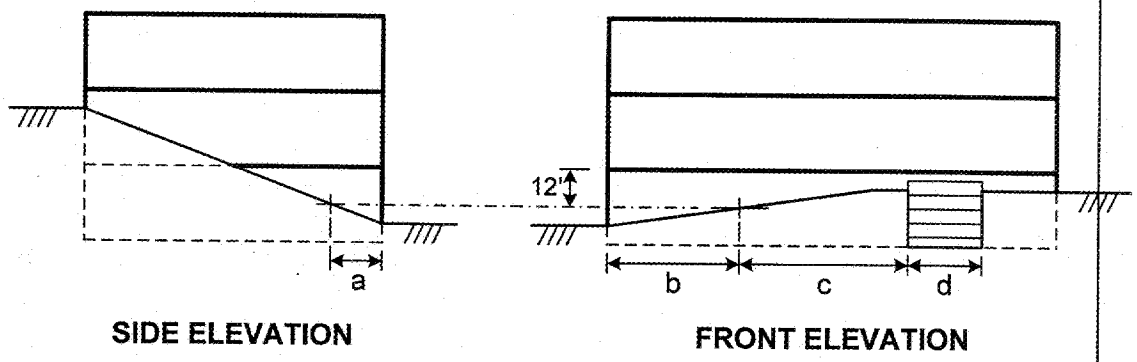

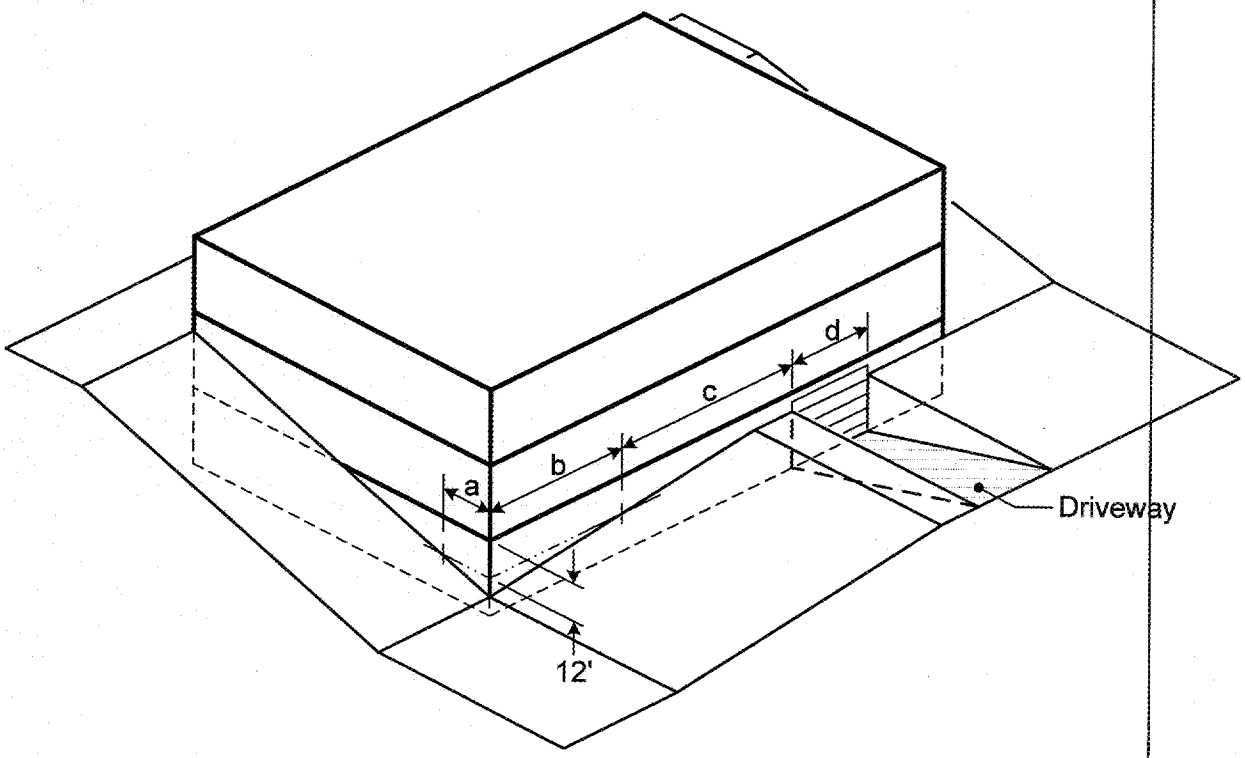

a + b ≤ 25' **c ≥ 10'** **d ≤ 22'**	Lowest level may be a basement below grade if all these are met

Section 41. Subsection 503.1 of the International Building Code, 2003 Edition, is amended as follows:

503.1 General. The height and area for buildings of different construction types shall be governed by the intended use of the building and shall not exceed the limits in Table 503 except as modified hereafter. Each part of a building included within the exterior walls or the exterior walls and fire walls where provided shall be permitted to be a separate building.

503.1.1 Basements. Basements <u>that are not stories above grade plane</u> need not be included in the total allowable area provided they do not exceed the area permitted for a one-story building.

503.1.2 Special industrial occupancies. Buildings and structures designed to house low-hazard industrial processes that require large areas and unusual heights to accommodate craneways or special machinery and equipment including, among others, rolling mills; structural metal fabrication shops and foundries; or the production and distribution of electric, gas or steam power, shall be exempt from the height and area limitations of Table 503.

503.1.3 Buildings on same lot. Two or more buildings on the same lot shall be regulated as separate buildings or shall be considered as portions of one building if the height of each building and the aggregate area of buildings are within the limitations of Table 503 as modified by Sections 504 and 506. The provisions of this code applicable to the aggregate building shall be applicable to each building.

503.1.4 Type I construction. Buildings of Type I construction permitted to be of unlimited tabular heights and areas are not subject to the special requirements that allow

ACTING CITY CLERK

unlimited area buildings in Section 507 or unlimited height in Sections 503.1.2 and 504.3 or increased height and areas for other types of construction.

Section 42. Table 503 of the International Building Code, 2003 Edition, is amended as follows:

TABLE 503 ALLOWABLE HEIGHT AND BUILDING AREAS

Height limitations shown as stories and feet above grade plane. Area limitations as determined by the definition of "Area, building," per floor.

		TYPE OF CONSTRUCTION								
		TYPE I		TYPE II		TYPE III		TYPE IV	TYPE V	
		A	B	A	B	A	B	HT	A	B
GROU	Hgt (Feet)	UL	160	65	55	65	55	65	50	40
P	Hgt (S)									
A-1	S	UL	5	3	2	3	2	3	2	1
	A	UL	UL	15,500	8,500	14,000	8,500	15,000	11,500	5,500
A-2	S	UL	11	3	2	3	2	3	2	1
	A	UL	UL	15,500	9,500	14,000	9,500	15,000	11,500	6,000
A-3	S	UL	11	3	2	3	2	3	2	1
	A	UL	UL	15,500	9,500	14,000	9,500	15,000	11,500	6,000
A-4	S	UL	11	3	2	3	2	3	2	1
	A	UL	UL	15,500	9,500	14,000	9,500	15,000	11,500	6,000
A-5	S	UL	UL	UL	UL	UL	UL	UL	UL	UL
	A	UL	UL	UL	UL	UL	UL	UL	UL	UL
B	S	UL	11	5	4	5	4	5	3	2
	A	UL	UL	37,500	23,000	28,500	19,000	36,000	18,000	9,000

ACTING CITY CLERK

E	S	UL	5	3	2	3	2	3	1	1
	A	UL	UL	26,500	14,500	23,500	14,500	25,500	18,500	9,500
F-1	S	UL	11	4	2	3	2	4	2	1
	A	UL	UL	25,000	15,500	19,000	12,000	33,500	14,000	8,500
F-2	S	UL	11	5	3	4	3	5	3	2
	A	UL	UL	37,500	23,000	28,500	18,000	50,500	21,000	13,000
H-1	S	1	1	1	1	1	1	1	1	NP
	A	21,000	16,500	11,000	7,000	9,500	7,000	10,500	7,500	NP
H-2	S	UL	3	2	1	2	1	2	1	1
	A	21,000	16,500	11,000	7,000	9,500	7,000	10,500	7,500	3,000
H-3	S	UL	6	4	2	4	2	4	2	1
	A	UL	60,000	26,500	14,000	17,500	13,000	25,500	10,000	5,000
H-4	S	UL	7	5	3	5	3	5	3	2
	A	UL	UL	37,500	17,500	28,500	17,500	36,000	18,000	6,500
H-5	S	3	3	3	3	3	3	3	3	2
	A	UL	UL	37,500	23,000	28,500	19,000	36,000	18,000	9,000
I-1	S	UL	9	4	3	4	3	4	3	2
	A	UL	55,000	19,000	10,000	16,500	10,000	18,000	10,500	4,500
I-2	S	UL	4	2	1	1	NP	1	1	NP
	A	UL	UL	15,000	11,000	12,000	NP	12,000	9,500	NP
I-3	S	UL	4	2	1	2	1	2	2	1
	A	UL	UL	15,000	11,000	10,000	7,500	12,000	7,500	5,000
I-4	S	UL	5	3	2	3	2	3	1	1
	A	UL	60,500	26,500	13,000	23,500	13,000	25,500	18,500	9,000
M	S	UL	11	4	4	4	4	4	3	1

ACTING CITY CLERK

	A	UL	UL	21,500	12,500	18,500	12,500	20,500	14,000	9,000
R-1	S	UL	11	4	4	4	4	4	((~~3~~)) 4	2
	A	UL	UL	24,000	16,000	24,000	16,000	20,500	12,000	7,000
R-2[a]	S	UL	11	4	4	4	4	4	((~~3~~)) 4	2
	A	UL	UL	24,000	16,000	24,000	16,000	20,500	12,000	7,000
R-3 [a]	S	UL	11	4	4	4	4	4	((~~3~~)) 4	3
	A	UL	UL	UL	UL	UL	UL	UL	UL	UL
R-4	S	UL	11	4	4	4	4	4	3	2
	A	UL	UL	24,000	16,000	24,000	16,000	20,500	12,000	7,000
S-1	S	UL	11	4	3	3	3	4	3	1
	A	UL	48,000	26,000	17,500	26,000	17,500	25,500	14,000	9,000
S-2[b, c]	S	UL	11	5	4	4	4	5	4	2
	A	UL	79,000	39,000	26,000	39,000	26,000	38,500	21,000	13,500
U[c]	S	UL	5	4	2	3	2	4	2	1
	A	UL	35,500	19,000	8,500	14,000	8,500	18,000	9,000	5,500

For SI:1 foot = 304.8 mm, 1 square foot = 0.0929 m^2.

UL = Unlimited, NP = Not permitted.

a. As applicable in Section 101.2.

b. For open parking structures, see Section 406.3.

c. For private garages, see Section 406.1.

Section 43. Subsections 505.1 through 505.4 of the International Building Code, 2003 Edition, are amended as follows:

505.1 General. A mezzanine or mezzanines in compliance with this section shall be considered a portion of the floor below. Such mezzanines shall not contribute to either the

ACTING CITY CLERK

building area or number of stories as regulated by Section 503.1. The area of the mezzanine shall be included in determining the fire area defined in Section 702. The clear height above and below the mezzanine floor construction shall not be less than 7 feet (2134 mm).

Interpretation I505.1: Mezzanines within individual dwelling units shall not be located above other dwelling units or common space other than corridors.

505.2 Area limitation. The aggregate area of a mezzanine or mezzanines within a room shall not exceed ((~~one-third~~)) one-half of the area of that room or space in which they are located. The enclosed portions of rooms shall not be included in a determination of the size of the room in which the mezzanine is located. In determining the allowable mezzanine area, the area of the mezzanine shall not be included in the area of the room.

Exceptions:

1. The aggregate area of mezzanines in buildings and structures of Type I or II construction for special industrial occupancies in accordance with Section 503.1.2 shall not exceed two-thirds of the area of the room.
2. The area of the mezzanine floor within a dwelling unit shall not exceed one half of the area of the main floor of the dwelling unit.

Interpretation I505.2: Only such main floor area conforming to clear height requirements of Section 505.1 shall be used in calculating the allowable area of the mezzanine floor.

505.3 Egress. Each occupant of a mezzanine shall have access to at least two independent means of egress where the common path of egress travel exceeds the limitations of Section 1013.3. Where a stairway provides a means of exit access from a mezzanine, the maximum travel distance includes the distance traveled on the stairway measured in the plane of the tread nosing.

Exceptions:

1. A single means of egress shall be permitted in accordance with Section 1014.1.

ACTING CITY CLERK

2. Accessible means of egress shall be provided in accordance with Section 1007.

505.4 Openness. A mezzanine shall be open and unobstructed to the room in which such mezzanine is located except for walls not more than 42 inches (1067 mm) high, columns and posts.

Exceptions:

1. Mezzanines or portions thereof are not required to be open to the room in which the mezzanines are located, provided that the occupant load of the aggregate area of the enclosed space does not exceed 10.
2. A mezzanine having two or more means of egress is not required to be open to the room in which the mezzanine is located, if at least one of the means of egress provides direct access to an exit from the mezzanine level.
3. Mezzanines or portions thereof are not required to be open to the room in which the mezzanines are located, provided that the aggregate floor area of the enclosed space does not exceed 10 percent of the allowable mezzanine area.
4. In industrial facilities, mezzanines used for control equipment are permitted to be glazed on all sides.
5. In Group F occupancies of unlimited area, meeting the requirements of Section 507.2 or 507.3, mezzanines or portions thereof are not required to be open to the room in which the mezzanines are located, provided that an approved fire alarm system is installed throughout the entire building or structure and notification appliances are installed throughout the mezzanines in accordance with the provisions of NFPA 72. In addition, the fire alarm system shall be initiated by automatic sprinkler water flow.

ACTING CITY CLERK

Section 44. Subsection 506.1 of the International Building Code, 2003 Edition, is amended as follows:

506.1 General. The areas limited by Table 503 shall be permitted to be increased due to frontage (I_f) and automatic sprinkler system protection (I_s) in accordance with the following:

$$A_a = A_t + \left[\frac{A_t I_f}{100}\right] + \left[\frac{A_t I_s}{100}\right] \qquad \textbf{(Equation 5-1)}$$

where:

A_a= Allowable area per floor (square feet).

A_t= Tabular area per floor in accordance with Table 503 (square feet).

I_f= Area increase due to frontage (percent) as calculated in accordance with Section 506.2.

I_s= Area increase due to sprinkler protection (percent) as calculated in accordance with Section 506.3.

((~~**506.1.1 Basements.** A single basement need not be included in the total allowable area provided such basement does not exceed the area permitted for a one-story building.~~))

Section 45. Subsection 506.4 of the International Building Code, 2003 Edition, is amended as follows:

506.4 Area determination. The maximum area of a building with more than one story shall be determined by multiplying the allowable area of the first floor (A_a), as determined in Section 506.1, by the number of stories as listed below.

1. For two-story buildings, multiply by 2;
2. For three-story or higher buildings, multiply by 3; and,

ACTING CITY CLERK

3. No story shall exceed the allowable area per floor (A_a), as determined in Section 506.1 for the occupancies on that floor.

Exceptions:

1. Unlimited area buildings in accordance with Section 507.
2. The maximum area of a building equipped throughout with an automatic sprinkler system in accordance with Section 903.3.1.2 shall be determined by multiplying the allowable area per floor (A_a), as determined in Section 506.1 by the number of stories.

Note: NFPA 13R sprinkler systems are allowed in buildings of Group R up to and including four stories in height. See Section 903.3.1.2.

Section 46. A new Subsection 508.2.1 is added to the Seattle Building Code, 2003 Edition, to read as follows:

508.2.1 Special provisions for Group A; Group B; Group M; Group R-2; or Group S-2 enclosed parking garages.

508.2.1.1 General. Other provisions of this code notwithstanding, the lower stories of a building may be considered as a separate and distinct building for the purpose of area limitations, limitation of number of stories, and type of construction, when all of the following conditions are met:

1. The basement and/or lower stories are of Type IA construction and are separated from upper stories by a three-hour fire barrier. Stairways permitted to be constructed of wood above the fire barrier may also be constructed of wood below the fire barrier. See Section 1002 for the definition of stairway.

ACTING CITY CLERK

2. The building contains only Group A with an occupant load less than 300; Group B; Group M; Group R-1; Group R-2; or Group S-2 enclosed parking garage used exclusively for the parking and storage of private motor vehicles.
3. The maximum building height in feet shall not exceed the limits set forth in Table 503 for the least type of construction involved.
4. Buildings constructed using the provisions of Section 508.2.1 shall be equipped throughout with an approved automatic sprinkler system in accordance with Section 903.3.1.1.
5. Where the story or stories above the fire barrier are of Type IIA, Type IIIA, Type IV, or Type VA construction, the highest floor used for human occupancy shall be located not more than 75 feet above the lowest level of fire department vehicle access. Roof decks with an occupant load of less than 10 may be located above 75 feet.
6. Shaft, stairway, ramp or escalator enclosures through the horizontal assembly shall have not less than a 2-hour fire-resistance rating with opening protectives in accordance with Table 715.3.

   Exception: Where the enclosure walls below the horizontal assembly have not less than a 3-hour fire-resistance rating with opening protectives in accordance with Table 715.3, the enclosure walls extending above the horizontal assembly shall be permitted to have a 1-hour fire-resistance rating provided:

   1. The building above the horizontal assembly is not required to be of Type I construction;
   2. The enclosure connects less than four stories, and

ACTING CITY CLERK

3. The enclosure opening protectives above the horizontal assembly have a minimum 1-hour fire protection rating.

7. For Types IIA, Type IIIA, Type IV and Type VA construction, the number of stories shall be measured according to Section 508.2.1.2.

508.2.1.2 Special story provisions for buildings with upper stories of Type IIA, Type IIIA, Type IV, or Type VA construction.

1. **Reference datums.** For purposes of this Section 508.2.1.2, the following two reference datums are established from which to measure the number of stories:

1.1 The finished floor of the second story when the first story is below the fire barrier; or

1.2 The finished floor of the third story in buildings where the second story is below a three–hour fire barrier and the finished floor of the third story is no more than 15 feet above the highest grade and no more than 25 feet above the lowest grade.

2. **Use of reference datums.** For buildings that comply with Section 508.2.1.1, the number of stories may be measured from either reference datum established in Item 1 of this Section 508.2.1.2.

Note: Figures 508(1) and 508(2) illustrate the application of Section 508.2.2. They are illustrations only. If there is a conflict or inconsistency between the figures and the code text, the code governs.

ACTING CITY CLERK

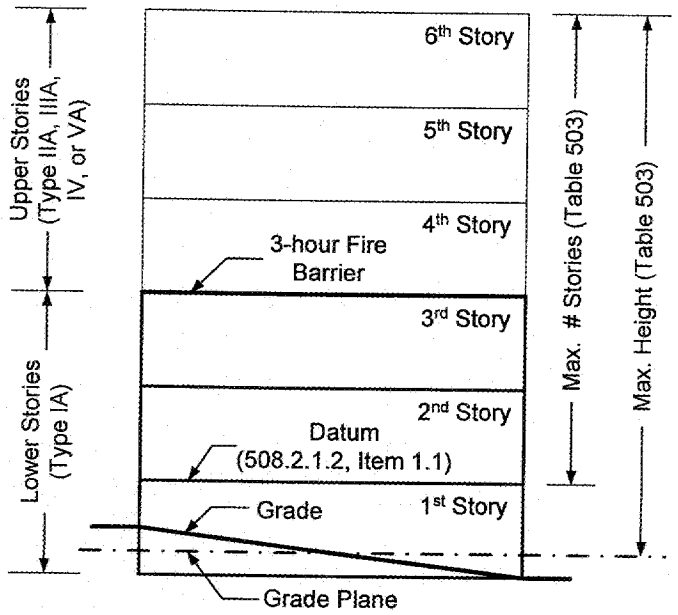

Fig. 508(1)

ACTING CITY CLERK

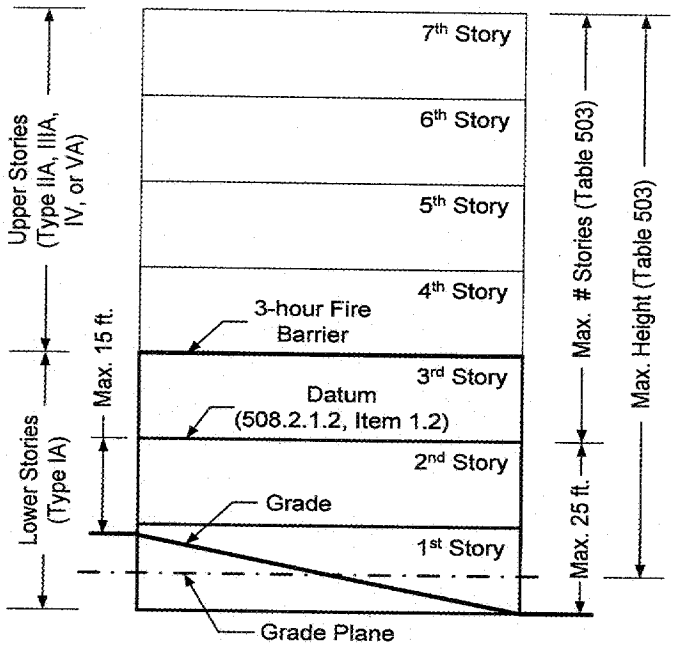

Fig. 508(2)

Section 47. Subsection 508.4 of the International Building Code, 2003 Edition, is amended as follows:

508.4 Parking beneath Group R. Where a maximum one-story above grade plane Group S-2 parking garage, enclosed or open, or combination thereof, of Type I construction or open of Type IV construction, with grade entrance, is provided under a building of Group R, the number of stories to be used in determining the minimum type of construction shall be measured from the floor above such a parking area. The floor assembly between the parking garage and the Group R above shall comply with the type of construction required for the parking garage and shall also provide a fire-resistance rating not less than the mixed occupancy separation required in Section 302.3.2. <u>The Group R occupancy shall be no more than four stories in height.</u>

ACTING CITY CLERK

Section 48. Subsection 602.3 of the International Building Code, 2003 Edition, is amended as follows:

602.3 Type III. Type III construction is that type of construction in which the exterior walls are of noncombustible materials and the interior building elements are of any material permitted by this code. Fire-retardant-treated wood framing complying with Section 2303.2 shall be permitted within exterior wall assemblies of a 2-hour rating or less.

Interpretation I602.3: Type IIIA buildings may include exposed heavy-timber construction for columns, beams, girders, arches, trusses, floors and roof decks except for fire-resistive construction required by Section 707 and Chapters 5 and 10.

Section 49. Subsection 602.5 of the International Building Code, 2003 Edition, is amended as follows:

602.5 Type V. Type V construction is that type of construction in which the structural elements, exterior walls and interior walls are of any materials permitted by this code.

Interpretation I602.5: Type VA buildings may include exposed heavy-timber construction for columns, beams, girders, arches, trusses, floors and roof decks except for fire-resistive construction required by Section 707 and Chapters 5 and 10.

Section 50. Tables 601 and 602 of the International Building Code, 2003 Edition, are amended as follows:

TABLE 601
FIRE-RESISTANCE RATING REQUIREMENTS FOR BUILDING ELEMENTS
(hours)

BUILDING ELEMENT	TYPE I		TYPE II		TYPE III		TYPE IV	TYPE V	
	A	B	A	B	A	B	HT	A	B

ACTING CITY CLERK

Structural frame[a] Including columns, girders, trusses	3[b]	2[b]	1	0	1	0	HT	1	0
Bearing walls									
Exterior[f]	3	2	1	0	2	2	2	1	0
Interior	3[b]	2[b]	1	0	1	0	1/HT	1	0
Nonbearing walls and partitions Exterior	See Table 602								
Nonbearing walls and partitions Interior[e]	0	0	0	0	0	0	See Section 602.4.6	0	0
Floor construction Including supporting beams and joists	2	2	1	0	1	0	HT	1	0
Roof construction Including supporting beans and joists	1-1/2[c]	1[c]	1[c]	0[c]	1[c]	0	HT	1[c]	0

For SI: 1 foot = 304.8 mm.

a. The structural frame shall be considered to be the columns and the girders, beams, trusses and spandrels having direct connections to the columns and bracing members designed to carry gravity loads. The members of floor or roof panels which have no connection to the columns shall be considered secondary members and not a part of the structural frame.

Interpretation I601: Bracing members that provide vertical stability shall be considered part of the structural frame whether or not they carry gravity loads.

ACTING CITY CLERK

b. Roof supports: Fire-resistance ratings of structural frame and bearing walls are permitted to be reduced by 1 hour where supporting a roof only.

c. 1. Except in Factory-Industrial (F-1), Hazardous (H), Mercantile (M) and Moderate-Hazard Storage (S-1) occupancies, fire protection of structural members shall not be required, including protection of roof framing and decking where every part of the roof construction is 20 feet or more above any floor immediately below. Fire-retardant-treated wood members shall be allowed to be used for such unprotected members.

2. In all occupancies, heavy timber shall be allowed where a 1-hour or less fire-resistance rating is required.

3. In Type I and II construction, fire-retardant-treated wood shall be allowed in buildings including girders and trusses as part of the roof construction when the building is:

i. Two stories or less in height;

ii. Type II construction over two stories; or

iii. Type I construction over two stories and the vertical distance from the upper floor to the roof is 20 feet or more.

d. An approved automatic sprinkler system in accordance with Section 903.3.1.1 shall be allowed to be substituted for 1-hour fire-resistance-rated construction, provided such system is not otherwise required by other provisions of the code or used for an allowable area increase in accordance with Section 506.3 or an allowable height increase in accordance with Section 504.2. The 1-hour substitution for the fire resistance of exterior walls shall not be permitted. <u>This substitution shall not be permitted in buildings constructed according to Section 1018.2 exception 4.</u>

e. Not less than the fire-resistance rating required by other sections of this code.

f. Not less than the fire-resistance rating based on fire separation distance (see Table 602).

ACTING CITY CLERK

TABLE 602
FIRE-RESISTANCE RATING REQUIREMENTS FOR EXTERIOR WALLS BASED ON FIRE SEPARATION DISTANCE[a]

FIRE SEPARATION DISTANCE (feet)	TYPE OF CONSTRUCTION	GROUP H	GROUP F-1, M, S-1	GROUP A, B, E[d], F-2, I, R[b], S-2, U
< 5[c]	All	3	2	1
≥ 5	IA	3	2	1
< 10	Others	2	1	1
≥ 10	IA, IB	2	1	1
< 30	IIB, VB	1	0	0
	Others	1	1	1
≥ 30	All	0	0	0

For SI: 1 foot = 304.8 mm.

a. Load-bearing exterior walls shall also comply with the fire-resistance rating requirements of Table 601.

b. Group R-3 and Group U when used as accessory to Group R-3, as applicable in Section 101.2 shall not be required to have a fire-resistance rating where the fire separation distance is 3 feet or more.

c. See Section 503.2 for party walls.

d. Day care occupancies and occupancies in Group E with an occupant load less than 20 are not required to have a fire-resistance rating where the fire separation distance is 3 feet or more.

Section 51. Subsection 603.1 of the International Building Code, 2003 Edition, is amended as follows:

ACTING CITY CLERK

603.1 Allowable materials. Combustible materials shall be permitted in buildings of Type I or II construction in the following applications and in accordance with Sections 603.1.1 through 603.1.3:

1. Fire-retardant-treated wood shall be permitted in:
    - 1.1. Nonbearing partitions where the required fire-resistance rating is 2 hours or less.
    - 1.2. Nonbearing exterior walls where no fire rating is required.
    - 1.3. Roof construction as permitted in Table 601, Note c, Item 3.
2. Thermal and acoustical insulation, other than foam plastics, having a flame spread index of not more than 25.

    Exceptions:

    1. Insulation placed between two layers of noncombustible materials without an intervening airspace shall be allowed to have a flame spread index of not more than 100.
    2. Insulation installed between a finished floor and solid decking without intervening airspace shall be allowed to have a flame spread index of not more than 200.
    3. Foam plastics in accordance with Chapter 26.
    4. Roof coverings that have an A, B or C classification.
    5. Interior floor finish and interior finish, trim and millwork such as doors, door frames, window sashes and frames.
    6. Where not installed over 15 feet (4572 mm) above grade, show windows, nailing or furring strips, wooden bulkheads below show windows, their frames, aprons and show cases.

ACTING CITY CLERK

7. Finished flooring applied directly to the floor slab or to wood sleepers that are firestopped in accordance with Section 717.2.7.
8. Partitions dividing portions of stores, offices or similar places occupied by one tenant only and which do not establish a corridor serving an occupant load of 30 or more shall be permitted to be constructed of fire-retardant-treated wood, 1-hour fire-resistance-rated construction or of wood panels or similar light construction up to 6 feet (1829 mm) in height.
9. Platforms as permitted in Section 410.
10. Combustible exterior wall coverings, balconies, bay or oriel windows, or similar appendages in accordance with Chapter 14.
11. Blocking such as for handrails, millwork, cabinets, and window and door frames.
12. Light-transmitting plastics as permitted by Chapter 26.
13. Mastics and caulking materials applied to provide flexible seals between components of exterior wall construction.
14. Exterior plastic veneer installed in accordance with Section 2605.2.
15. Nailing or furring strips as permitted by Section 803.4.
16. Heavy timber as permitted by Note c, Item 2, to Table 601 and Sections 602.4.7 and 1406.3.
17. Aggregates, component materials and admixtures as permitted by Section 703.2.2.
18. Sprayed cementitious and mineral fiber fire-resistance-rated materials installed to comply with Section 1704.11.
19. Materials used to protect penetrations in fire-resistance-rated assemblies in accordance with Section 712.

ACTING CITY CLERK

20. Materials used to protect joints in fire-resistance-rated assemblies in accordance with Section 713.
21. Materials allowed in the concealed spaces of buildings of Type I and II construction in accordance with Section 717.5.
22. Materials exposed within plenums complying with Section 602 of the *International Mechanical Code*.
23. Stairways within individual dwelling units and stairways serving a single tenant space may be of fire-retardant-treated wood or heavy-timber construction. In other than Group R Occupancies, such stairways shall not serve as a required means of egress.

603.1.1 Ducts. The use of nonmetallic ducts shall be permitted when installed in accordance with the limitations of the *International Mechanical Code*.

603.1.2 Piping. The use of combustible piping materials shall be permitted when installed in accordance with the limitations of the *International Mechanical Code* and the ((~~*International*~~)) *Uniform Plumbing Code*.

603.1.3 Electrical. The use of electrical wiring methods with combustible insulation, tubing, raceways and related components shall be permitted when installed in accordance with the limitations of the ((~~ICC~~)) *Seattle Electrical Code*.

Section 52. Subsection 702.1 of the International Building Code, 2003 Edition, is amended as follows:

702.1 Definitions. The following words and terms shall, for the purposes of this chapter, and as used elsewhere in this code, have the meanings shown herein.

ANNULAR SPACE. The opening around the penetrating item.

ACTING CITY CLERK

CEILING RADIATION DAMPER. A listed device installed in a ceiling membrane of a fire-resistance-rated floor/ceiling or roof/ceiling assembly to limit automatically the radiative heat transfer through an air inlet/outlet opening.

COMBINATION FIRE/SMOKE DAMPER. A listed device installed in ducts and air transfer openings designed to close automatically upon the detection of heat and to also resist the passage of air and smoke. The device is installed to operate automatically, controlled by a smoke detection system, and where required, is capable of being positioned from a remote command station.

DAMPER. See "Ceiling radiation damper," "Combination fire/smoke damper," "Fire damper" and "Smoke damper."

DRAFTSTOP. A material, device or construction installed to restrict the movement of air within open spaces of concealed areas of building components such as crawl spaces, floor/ceiling assemblies, roof/ceiling assemblies and attics.

F RATING. The time period that the through-penetration firestop system limits the spread of fire through the penetration when tested in accordance with ASTM E 814.

FIRE AREA. The aggregate floor area enclosed and bounded by fire walls, fire barriers, exterior walls or fire-resistance-rated horizontal assemblies of a building.

FIRE BARRIER. A fire-resistance-rated vertical or horizontal assembly of materials designed to restrict the spread of fire in which openings are protected.

FIRE DAMPER. A listed device, installed in ducts and air transfer openings of an air distribution system or smoke control system, designed to close automatically upon detection of heat, to interrupt migratory airflow, and to restrict the passage of flame. Fire dampers are classified for use in either static systems that will automatically shut down in the event of a fire, or in dynamic systems that continue to operate during a fire. A dynamic fire damper is tested and rated for closure under airflow.

ACTING CITY CLERK

FIRE DOOR. The door component of a fire door assembly.

FIRE DOOR ASSEMBLY. Any combination of a fire door, frame, hardware, and other accessories that together provide a specific degree of fire protection to the opening.

FIRE PARTITION. A vertical assembly of materials designed to restrict the spread of fire in which openings are protected.

FIRE PROTECTION RATING. The period of time that an opening protective assembly will maintain the ability to confine a fire as determined by tests prescribed in Section 715. Ratings are stated in hours or minutes.

FIRE RESISTANCE. That property of materials or their assemblies that prevents or retards the passage of excessive heat, hot gases or flames under conditions of use.

FIRE-RESISTANCE RATING. The period of time a building element, component or assembly maintains the ability to confine a fire, continues to perform a given structural function, or both, as determined by the tests, or the methods based on tests, prescribed in Section 703.

FIRE-RESISTANT JOINT SYSTEM. An assemblage of specific materials or products that are designed, tested, and fire-resistance rated in accordance with either ASTM E 1966 or UL 2079 to resist for a prescribed period of time the passage of fire through joints made in or between fire-resistance-rated assemblies.

FIRE SEPARATION DISTANCE. The distance measured from the building face to the closest interior lot line, to the ((~~centerline~~)) <u>opposite side</u> of a street, alley or public way, or to an imaginary line between two buildings on the lot. The distance shall be measured at right angles from the face of the wall.

FIRE WALL. A fire-resistance-rated wall having protected openings, which restricts the spread of fire and extends continuously from the foundation to or through the roof, with

ACTING CITY CLERK

sufficient structural stability under fire conditions to allow collapse of construction on either side without collapse of the wall.

FIRE WINDOW ASSEMBLY. A window constructed and glazed to give protection against the passage of fire.

FIREBLOCKING. Building materials installed to resist the free passage of flame to other areas of the building through concealed spaces.

FLOOR FIRE DOOR ASSEMBLY. A combination of a fire door, a frame, hardware and other accessories installed in a horizontal plane, which together provide a specific degree of fire protection to a through opening in a fire-resistance-rated floor (see Section 712.4.6).

JOINT. The linear opening in or between adjacent fire-resistance-rated assemblies that is designed to allow independent movement of the building in any plane caused by thermal, seismic, wind or any other loading.

MEMBRANE PENETRATION. An opening made through one side (wall, floor or ceiling membrane) of an assembly.

MEMBRANE-PENETRATION FIRESTOP. A material, device or construction installed to resist for a prescribed time period the passage of flame and heat through openings in a protective membrane in order to accommodate cables, cable trays, conduit, tubing, pipes or similar items.

PENETRATION FIRESTOP. A through-penetration firestop or a membrane-penetration firestop.

SELF-CLOSING. As applied to a fire door or other opening, means equipped with an approved device that will ensure closing after having been opened.

SHAFT. An enclosed space extending through one or more stories of a building, connecting vertical openings in successive floors, or floors and roof.

SHAFT ENCLOSURE. The walls or construction forming the boundaries of a shaft.

ACTING CITY CLERK

SMOKE BARRIER. A continuous membrane, either vertical or horizontal, such as a wall, floor, or ceiling assembly, that is designed and constructed to restrict the movement of smoke.

SMOKE COMPARTMENT. A space within a building enclosed by smoke barriers on all sides, including the top and bottom.

SMOKE DAMPER. A listed device installed in ducts and air transfer openings that is designed to resist the passage of air and smoke. The device is installed to operate automatically, controlled by a smoke detection system, and where required, is capable of being positioned from a remote command station.

SPLICE. The result of a factory and/or field method of joining or connecting two or more lengths of a fire-resistant joint system into a continuous entity.

T RATING. The time period that the penetration firestop system, including the penetrating item, limits the maximum temperature rise to 325°F (163°C) above its initial temperature through the penetration on the nonfire side when tested in accordance with ASTM E 814.

THROUGH PENETRATION. An opening that passes through an entire assembly.

THROUGH-PENETRATION FIRESTOP SYSTEM. An assemblage of specific materials or products that are designed, tested and fire-resistance rated to resist for a prescribed period of time the spread of fire through penetrations. The F and T rating criteria for penetration firestop systems shall be in accordance with ASTM E 814. See definitions of "F rating" and "T rating."

Section 53. Subsection 703.3 of the International Building Code, 2003 Edition, is amended as follows:

703.3 Alternative methods for determining fire resistance. The application of any of the alternative methods listed in this section shall be based on the fire exposure and acceptance criteria specified in ASTM E 119. The required fire resistance of a building element shall be permitted to be established by any of the following methods or procedures:

1. Fire-resistance designs documented in approved sources.

ACTING CITY CLERK

2. Prescriptive designs of fire-resistance-rated building elements as prescribed in Section 720.
3. Calculations in accordance with Section 721.
4. Engineering analysis based on a comparison of building element designs having fire-resistance ratings as determined by the test procedures set forth in ASTM E 119.
5. Alternative protection methods as allowed by Sections ((~~104.11~~)) 104.14 and 104.15.

Section 54. Subsection 704.2 of the International Building Code, 2003 Edition, is amended as follows:

704.2 Projections. Cornices, eave overhangs, exterior balconies and similar architectural appendages extending beyond the floor area shall conform to the requirements of this section and Section 1406. Exterior egress balconies and exterior exit stairways shall also comply with Sections 1013.5 and 1022.1. Projections shall not extend beyond the distance determined by the following two methods, whichever ((~~results in the lesser projection~~)) is less restrictive:

1. A point one-third the distance to the lot line from an assumed vertical plane located where protected openings are required in accordance with Section 704.8.
2. More than 12 inches (305 mm) into areas where openings are prohibited.

Code Alternate CA704.2: Balconies and decks constructed with grated metal decking that allows smoke and heat to ventilate may be considered projections and not floor area.

Sprinklers shall be provided on these balconies and decks that project more than two feet from the building.

Interpretation I704.2: For purposes of Section 704.2, gutters 6 inches or less in width that are not an integral part of the structure are not considered projections on Group R-3 Occupancies and on Group U accessory occupancies.

ACTING CITY CLERK

704.2.1 Type I and II construction. Projections from walls of Type I or II construction shall be of noncombustible materials or combustible materials as allowed by Sections 1406.3 and 1406.4.

704.2.2 Type III, IV or V construction. Projections from walls of Type III, IV or V construction shall be of any approved material.

Eave overhangs from walls of Types IIIA, IV or VA construction or from walls that are otherwise required to be of fire-resistance-rated construction shall be finished on the underside with at least 1/2-inch (13 mm) gypsum sheathing or equivalent or shall be heavy-timber construction conforming to Section 602.4. See Section 712.3.2 for allowable vent penetrations.

704.2.3 Combustible projections. Combustible projections located where openings are not permitted or where protection of openings is required shall be of at least 1-hour fire-resistance-rated construction, Type IV construction or as required by Section 1406.3.

Exceptions:

1. Type V construction shall be allowed for R-3 occupancies, as applicable in Section 101.2.
2. Eave overhangs may be of less than one-hour construction provided the underside is finished with at least 1/2-inch (13 mm) gypsum sheathing or equivalent.

Section 55. Subsection 704.8 and Table 704.8 of the International Building Code, 2003 Edition, are amended as follows:

704.8 Allowable area of openings. The maximum area of unprotected or protected openings permitted in an exterior wall in any story shall not exceed the values set forth in Table 704.8.

ACTING CITY CLERK

Where both unprotected and protected openings are located in the exterior wall in any story, the total area of the openings shall comply with the following formula:

$$\frac{A}{a} + \frac{A_u}{a_u} \leq 1.0 \qquad \textbf{(Equation 7-2)}$$

where:

A = Actual area of protected openings, or the equivalent area of protected openings, A_e (see Section 704.7)
a = Allowable area of protected openings.
A_u = Actual area of unprotected openings.
a_u = Allowable area of unprotected openings.

704.8.1 Automatic sprinkler system. In buildings equipped throughout with an automatic sprinkler system in accordance with Section 903.3.1.1, the maximum allowable area of unprotected openings in occupancies other than Groups H-1, H-2 and H-3 shall be the same as the tabulated limitations for protected openings.

704.8.2 First story. In occupancies other than Group H, unlimited unprotected openings are permitted in the first story of exterior walls facing a street that have a fire separation distance of greater than ((~~15~~)) 30 feet (4572 mm), or facing an unoccupied space. The unoccupied space shall be on the same lot or dedicated for public use, shall not be less than 30 feet (9144 mm) in width, and shall have access from a street by a posted fire lane in accordance with the *International Fire Code*.

ACTING CITY CLERK

TABLE 704.8

MAXIMUM AREA OF EXTERIOR WALL OPENINGS[a]

CLASSIFICATION OF OPENING	FIRE SEPARATION DISTANCE (feet)							
	0 to 3[e,h]	Greater than 3 to 5[b]	Greater than 5 to 10[d, f]	Greater than 10 to 15[c,d,f]	Greater than 15 to 20[c, f]	Greater than 20 to 25[c, f]	Greater than 25 to 30[c, f]	Greater than 30
Unprotected	Not Permitted[g]	Not Permitted[b, g]	10% [g]	15%[g]	25%[g]	45%[g]	70%[g]	No Limit
Protected	Not Permitted	15%	25%	45%	75%	No Limit	No Limit	No Limit

For SI: 1 foot = 304.8 mm.

a. Values given are percentage of the area of the exterior wall.

b. For occupancies in Group R-3, as applicable in Section 101.2, <u>and day care occupancies and occupancies in Group E with an occupant load less than 20 in buildings of Types IIA, IIB or V construction,</u> the maximum percentage of unprotected and protected exterior wall openings shall be 25 percent.

c. The area of openings in an open parking structure with a fire separation distance of greater than 10 feet shall not be limited.

d. For occupancies in Group H-2 or H-3, unprotected openings shall not be permitted for openings with a fire separation distance of 15 feet or less.

e. For requirements for fire walls for buildings with differing roof heights, see Section 705.6.1.

ACTING CITY CLERK

f. The area of unprotected and protected openings is not limited for occupancies in Group R-3, as applicable in Section 101.2, with a fire separation distance greater than 5 feet.

g. Buildings whose exterior bearing wall, exterior nonbearing wall and exterior structural frame are not required to be fire-resistance rated shall be permitted to have unlimited unprotected openings.

h. Includes accessory buildings to Group R-3 as applicable in Section 101.2.

Section 56. Subsection 705.5 of the International Building Code, 2003 Edition, is amended as follows:

705.5 Horizontal continuity. Fire walls shall be continuous from exterior wall to exterior wall and shall extend at least 18 inches (457mm)beyond the exterior surface of exterior walls.

Exceptions:

1. Fire walls shall be permitted to terminate at the interior surface of combustible exterior sheathing or siding provided the exterior wall has a fire-resistance rating of at least 1 hour for a horizontal distance of at least 4 feet (1220 mm) on both sides of the fire wall. Openings within such exterior walls shall be protected by fire assemblies having a fire protection rating of not less than 3/4 hour.
2. Fire walls shall be permitted to terminate at the interior surface of noncombustible exterior sheathing, exterior siding or other noncombustible exterior finishes provided the sheathing, siding, or other exterior noncombustible finish extends a horizontal distance of at least 4 feet (1220 mm) on both sides of the fire wall.
3. Fire walls shall be permitted to terminate at the interior surface of noncombustible exterior sheathing where the building on each side of the fire wall is protected by an automatic sprinkler system installed in accordance with Section 903.3.1.1 or 903.3.1.2.

ACTING CITY CLERK

705.5.1 Exterior walls. Where the fire wall intersects the exterior walls, the fire-resistance rating for the exterior walls on both sides of the fire wall shall have a 1-hour fire-resistance rating with3/4-hour opening protection where opening protection is required. The fire-resistance rating of the exterior wall shall extend a minimum of 4 feet (1220 mm) on each side of the intersection of the fire wall to exterior wall. Exterior wall intersections at fire walls that form an angle equal to or greater than 180 degrees (3.14 rad) do not need exterior wall protection.

705.5.2 Horizontal projecting elements. Fire walls shall extend to the outer edge of horizontal projecting elements such as balconies, roof overhangs, canopies, ((~~marquees~~)) and architectural projections that are within 4 feet (1220 mm) of the fire wall.

Exceptions:

1. Horizontal projecting elements without concealed spaces provided the exterior wall behind and below the projecting element has not less than 1-hour fire-resistance-rated construction for a distance not less than the depth of the projecting element on both sides of the fire wall. Openings within such exterior walls shall be protected by fire assemblies having a fire protection rating of not less than 3/4 hour.
2. Noncombustible horizontal projecting elements with concealed spaces, provided a minimum 1-hour fire-resistance-rated wall extends through the concealed space. The projecting element shall be separated from the building by a minimum of 1-hour fire-resistance-rated construction for a distance on each side of the firewall equal to the depth of the projecting element. The wall is not required to extend under the projecting element where the building exterior wall is not less than 1-hour fire-resistance rated for a distance on each side of the firewall equal to the depth of the projecting element. Openings within such

ACTING CITY CLERK

exterior walls shall be protected by fire assemblies having a fire protection rating of not less than 3/4 hour.

3. For combustible horizontal projecting elements with concealed spaces, the fire wall need only extend through the concealed space to the outer edges of the projecting elements. The exterior wall behind and below the projecting element shall be of not less than 1-hour fire-resistance-rated construction for a distance not less than the depth of the projecting elements on both sides of the fire wall. Openings within such exterior walls shall be protected by fire assemblies having a fire-protection rating of not less than 3/4 hour.

Section 57. Subsection 707.2 of the International Building Code, 2003 Edition, is amended as follows:

707.2 Shaft enclosure required. Openings through a floor/ceiling assembly shall be protected by a shaft enclosure complying with this section.

Exceptions:

1. A shaft enclosure is not required for openings totally within an individual residential dwelling unit and connecting four stories or less.
2. A shaft enclosure is not required in a building equipped throughout with an automatic sprinkler system in accordance with Section 903.3.1.1 for an escalator opening or stairway which is not a portion of the means of egress protected according to Item 2.1 or 2.2:
   - 2.1. Where the area of the floor opening between stories does not exceed twice the horizontal projected area of the escalator or stairway and the opening is protected by a draft curtain and closely spaced sprinklers in accordance

ACTING CITY CLERK

with NFPA 13. In other than Groups B and M, this application is limited to openings that do not connect more than four stories.

Note: NFPA 13 requires draft curtains to be at least 18 inches (457 mm) deep, and to be of noncombustible or limited-combustible material.

2.2. Where the opening is protected by approved power-operated automatic shutters at every floor penetrated. The shutters shall be of noncombustible construction and have a fire-resistance rating of not less than 1.5 hours. The shutter shall be so constructed as to close immediately upon the actuation of a smoke detector installed in accordance with Section 907.10 and shall completely shut off the well opening. Escalators shall cease operation when the shutter begins to close. The shutter shall operate at a speed of not more than 30 feet per minute (152.4 mm/s) and shall be equipped with a sensitive leading edge to arrest its progress where in contact with any obstacle, and to continue its progress on release therefrom.

3. A shaft enclosure is not required for penetrations by pipe, tube, conduit, wire, cable, and vents protected in accordance with Section 712.4.

4. A shaft enclosure is not required for penetrations by ducts protected in accordance with Section 712.4. Grease ducts shall be protected in accordance with the *International Mechanical Code.*

5. A shaft enclosure is not required for floor openings complying with the provisions for covered malls or atriums.

6. A shaft enclosure is not required for approved masonry chimneys, where annular space protection is provided at each floor level in accordance with Section 717.2.5.

ACTING CITY CLERK

7. In other than Groups I-2 and I-3, a shaft enclosure is not required for a floor opening that complies with the following:
   - 7.1. Does not connect more than two stories.
   - 7.2. Is not part of the required means of egress system except as permitted in Section 1019.1.
   - 7.3. Is not concealed within the building construction.
   - 7.4. Is not open to a corridor in Group I and R occupancies.
   - 7.5. Is not open to a corridor on nonsprinklered floors in any occupancy.
   - 7.6. Is separated from floor openings serving other floors by construction conforming to required shaft enclosures.
8. A shaft enclosure is not required for <u>openings through floors and for</u> automobile ramps in ((~~open parking garages and enclosed~~)) parking garages constructed in accordance with Sections 406.3 and 406.4((~~, respectively~~)).
9. A shaft enclosure is not required for floor openings between a mezzanine and the floor below.
10. A shaft enclosure is not required for joints protected by a fire-resistant joint system in accordance with Section 713.
11. <u>Penetrations of floors inside a wall cavity by gas vents and piping in buildings of Types III, IV, and V construction need not be protected.</u>
12 Where permitted by other sections of this code.

Section 58. Subsection 707.4 of the International Building Code, 2003 Edition, is amended as follows:

707.4 Fire-resistance rating. Shaft enclosures shall have a fire-resistance rating of not less than 2 hours where connecting <u>more than</u> four stories ((~~or more~~))and not less than1 hour where

ACTING CITY CLERK

connecting ((~~less than~~)) four and fewer stories. The number of stories connected by the shaft enclosure shall include any basements but not any mezzanines. Shaft enclosures shall be constructed as fire barriers in accordance with Section 706. Shaft enclosures shall have a fire-resistance rating not less than the floor assembly penetrated, but need not exceed 2 hours.

Air ducts passing through exit enclosures shall be separated from the enclosure by construction having a fire-resistance rating at least equal to the exit enclosure walls.

Section 59. Subsection 707.8 of the International Building Code, 2003 Edition, is amended as follows:

707.8 Penetrations. Penetrations in a shaft enclosure shall be protected in accordance with Section 712 as required for fire barriers.

707.8.1 Prohibited penetrations. Penetrations other than those necessary for the purpose of the shaft shall not be permitted in shaft enclosures. Ducts shall not penetrate exit shaft enclosures. See Section 3022 for installation of pipes and ducts in elevator hoistways.

Exception: Duct penetrations as permitted in Section 1019.1.2.

Section 60. Subsection 707.14 of the International Building Code, 2003 Edition, is amended as follows:

707.14 Elevator and dumbwaiter shafts. Elevator hoistway and dumbwaiter enclosures shall be constructed in accordance with Section 707.4 and Chapter 30.

707.14.1 Elevator lobby. Elevators opening into a fire-resistance-rated corridor as required by Section 1016.1 shall be provided with an elevator lobby at each floor containing such a corridor. The lobby shall separate the elevators from the corridor by fire partitions and the required opening protection. Elevator lobbies shall have at least one means of egress complying with Chapter 10 and other provisions within this code.

ACTING CITY CLERK

Exceptions:

1. In office buildings, separations are not required from a street-floor elevator lobby provided the entire street floor is equipped with an automatic sprinkler system in accordance with Section 903.3.1.1.
2. Elevators not required to be located in a shaft in accordance with Section 707.2.
3. Where additional doors are provided ((~~in accordance with Section 3002.6~~)) at the point of access to an elevator car. Such doors shall be tested in accordance with UL 1784 without an artificial bottom seal. The doors shall be tight-fitting smoke- and draft-control assemblies, and maintained automatic closing by actuation of a smoke detector in accordance with Section 715.3.7. Doors that latch shall be provided with panic hardware, openable from inside the elevator car.
4. In other than Group I-3, and buildings more than four stories above the lowest level of fire department vehicle access, lobby separation is not required where the building, including the lobby and corridors leading to the lobby, is protected by an automatic sprinkler system installed throughout in accordance with Section 903.3.1.1 or 903.3.1.2.
5. Lobbies are not required where elevator shafts are pressurized in accordance with Section 909.22.

Section 61. A new Subsection 707.15 is added to the Seattle Building Code, 2003 Edition, to read as follows:

707.15 Chimneys and fireplaces. Unless exposed to the exterior in an approved manner, approved factory-built chimneys shall be enclosed in fire-resistive shaft construction as required for the building construction type. Approved chimneys serving multiple dwelling units

ACTING CITY CLERK

may be installed within the same shaft, provided approved metal draft stops are installed at each floor level. All combustible construction shall be protected as required for fire-resistive shaft construction. Interior shaft wall joints shall be fire-taped when required and when space allows, but fire-taping may be omitted from joints on the final closure wall provided the joints are installed in a tight manner.

The back of listed manufactured fireplace boxes may replace that portion of the shaft wall where they are located, provided the joint between the box and the adjacent shaft wall is tightly constructed and installed according to manufacturer's specification. Fresh air make-up ducts required by the Energy or Mechanical codes may penetrate the shaft at the fire box. Fresh air make-up ducts which pass through any portion of the building other than the shaft shall be at least 26 gage metal.

Section 62. Subsections 712.3 and 712.4 of the International Building Code, 2003 Edition, are amended as follows:

712.3 Fire-resistance-rated walls. Penetrations into or through fire walls, fire barriers, smoke barrier walls, and fire partitions shall comply with this section.

712.3.1 Through penetrations. Through penetrations of fire-resistance-rated walls shall comply with Section 712.3.1.1 or 712.3.1.2.

Exception: Where the penetrating items are steel, ferrous or copper pipes or steel conduits, the annular space between the penetrating item and the fire-resistance-rated wall shall be permitted to be protected as follows:

1. In concrete or masonry walls where the penetrating item is a maximum 6-inch (152 mm) nominal diameter and the opening is a maximum 144 square inches (0.0929 m2), concrete, grout or mortar shall be permitted where installed the full

ACTING CITY CLERK

thickness of the wall or the thickness required to maintain the fire-resistance rating; or

2. The material used to fill the annular space shall prevent the passage of flame and hot gases sufficient to ignite cotton waste when subjected to ASTM E 119 time-temperature fire conditions under a minimum positive pressure differential of 0.01 inch (2.49 Pa) of water at the location of the penetration for the time period equivalent to the fire-resistance rating of the construction penetrated.

712.3.1.1 Fire-resistance-rated assemblies. Penetrations shall be installed as tested in an approved fire-resistance-rated assembly.

712.3.1.2 Through-penetration firestop system. Through penetrations shall be protected by an approved penetration firestop system installed as tested in accordance with ASTM E 814 or UL 1479, with a minimum positive pressure differential of 0.01 inch (2.49 Pa) of water and shall have an F rating of not less than the required fire-resistance rating of the wall penetrated.

712.3.2 Membrane penetrations. Membrane penetrations shall comply with Section 712.3.1. Where walls and partitions are required to have a minimum 1-hour fire-resistance rating, recessed fixtures shall be installed such that the required fire resistance will not be reduced.

Exceptions:

1. Steel electrical boxes that do not exceed 16 square inches (0.0103 m2) in area provided the total area of such openings does not exceed 100 square inches (0.0645 m2) for any 100 square feet (9.29 m2) of wall area. Outlet boxes on opposite sides of the wall shall be separated as shown:

    1.1. By a horizontal distance of not less than 24 inches (610 mm);

ACTING CITY CLERK

1.2. By a horizontal distance of not less than the depth of the wall cavity where the wall cavity is filled with cellulose loose fill, rockwool or slag mineral wool insulation;

1.3. By solid fireblocking in accordance with Section 717.2.1;

1.4. By protecting both outlet boxes with listed putty pads; or

1.5. By other listed materials and methods.

2. Membrane penetrations for listed electrical outlet boxes of any material are permitted provided such boxes have been tested for use in fire-resistance-rated assemblies and are installed in accordance with the instructions included in the listing. Outlet boxes on opposite sides of the wall shall be separated as follows:

2.1. By a horizontal distance of not less than 24 inches (610 mm);

2.2. By solid fireblocking in accordance with Section 717.2.1;

2.3. By protecting both outlet boxes with listed putty pads; or

2.4. By other listed materials and methods.

3. The annular space created by the penetration of a fire sprinkler provided it is covered by a metal escutcheon plate.

4. Vents may be installed in soffits of exterior balconies required to have a fire-resistance-rating equivalent to the floor. If provided, vent openings shall be covered with corrosion–resistant metal mesh.

5. When Section 704 requires that eaves be finished on the underside with fire-resistance-rated materials, vents may be installed if the vent openings are covered with corrosion–resistant metal mesh.

ACTING CITY CLERK

712.3.3 Ducts and air transfer openings. Penetrations of fire-resistance-rated walls by ducts and air transfer openings that are not protected with fire dampers shall comply with this section.

712.3.4 Dissimilar materials. Noncombustible penetrating items shall not connect to combustible items beyond the point of firestopping unless it can be demonstrated that the fire-resistance integrity of the wall is maintained.

712.4 Horizontal assemblies. Penetrations of a floor, floor/ceiling assembly or the ceiling membrane of a roof/ceiling assembly shall be protected in accordance with Section 707. Penetrations permitted by Exceptions 3 and 4 of Section 707.2 shall comply with Sections 712.4.1 through 712.4.4.

Exception: Penetrations located within the same room or undivided area as floor openings are not required to have a shaft enclosure in accordance with Exception 1, 2, 5, 7, 8 or 9 in Section 707.2.

712.4.1 Through penetrations. Through penetrations of fire-resistance-rated horizontal assemblies shall comply with Section 712.4.1.1 or 712.4.1.2.

Exceptions:

1. Penetrations by steel, ferrous or copper conduits, pipes, tubes, vents, concrete, or masonry through a single fire-resistance-rated floor assembly where the annular space is protected with materials that prevent the passage of flame and hot gases sufficient to ignite cotton waste when subjected to ASTM E 119 time-temperature fire conditions under a minimum positive pressure differential of 0.01 inch (2.49 Pa) of water at the location of the penetration for the time period equivalent to the fire-resistance rating of the construction penetrated. Penetrating items with a maximum 6-inch (152 mm) nominal diameter shall not be limited to the penetration of a single fire-resistance-rated floor assembly provided that the area of the

ACTING CITY CLERK

penetration does not exceed 144 square inches (92 900 mm^2) in any 100 square feet (9.3 m^2) of floor area.

2. Penetrations in a single concrete floor by steel, ferrous or copper conduits, pipes, tubes and vents with a maximum 6-inch (152 mm) nominal diameter provided concrete, grout or mortar is installed the full thickness of the floor or the thickness required to maintain the fire-resistance rating. The penetrating items with a maximum 6-inch (152 mm) nominal diameter shall not be limited to the penetration of a single concrete floor provided that the area of the penetration does not exceed 144 square inches (0.0929 m^2).
3. Electrical outlet boxes of any material are permitted provided that such boxes are tested for use in fire-resistance-rated assemblies and installed in accordance with the tested assembly.

712.4.1.1 Fire-resistance-rated assemblies. Penetrations shall be installed as tested in an approved fire-resistance-rated assembly.

712.4.1.2 Through-penetration firestop system. Through penetrations shall be protected by an approved through-penetration firestop system installed and tested in accordance with ASTM E 814 or UL 1479, with a minimum positive pressure differential of 0.01 inch (2.49 Pa) of water. The system shall have an F rating and a T rating of not less than 1 hour but not less than the required rating of the floor penetrated.

Exception: Floor penetrations contained and located within the cavity of a wall do not require a T rating.

712.4.2 Membrane penetrations. Penetrations of membranes that are part of a fire-resistance-rated horizontal assembly shall comply with Section 712.4.1.1 or 712.4.1.2. Where floor/ceiling assemblies are required to have a minimum 1-hour fire-resistance

ACTING CITY CLERK

rating, recessed fixtures shall be installed such that the required fire resistance will not be reduced.

Exceptions:

1. Membrane penetrations by steel, ferrous or copper conduits, electrical outlet boxes, pipes, tubes, vents, concrete, or masonry-penetrating items where the annular space is protected either in accordance with Section 712.4.1 or to prevent the free passage of flame and the products of combustion. Such penetrations shall not exceed an aggregate area of 100 square inches (64 500 mm2) in any 100 square feet (9.3 m2) of ceiling area in assemblies tested without penetrations.
2. Membrane penetrations by listed electrical outlet boxes of any material are permitted provided such boxes have been tested for use in fire-resistance-rated assemblies and are installed in accordance with the instructions included in the listing.
3. The annular space created by the penetration of a fire sprinkler provided it is covered by a metal escutcheon plate.

Code Alternate CA 712.4: When approved by the building official, the following assemblies satisfy the requirements of Section 712.4.2.

	PROTECTION REQUIRED	
Opening Type	**Framing Type**	
	Solid Sawn	MPCT & PWJ[1]
Can Light	In floor joists, solid block each side of light with 2 inch framing or 5/8 inch gypsum wallboard. In dropped soffits, prerock bottom of floor joists above with 5/8 inch gypsum wallboard.	Box the light (four sides and top) with 5/8 inch gypsum wallboard, 1-1/2 inch high-density mineral fiber, or 3-1/2 inch fiberglass, securely fastened. See Illustration B.

ACTING CITY CLERK

HVAC[2]	Solid block beside opening with 2 inch framing or 5/8 inch gypsum wallboard and, Drape 1-1/2 inch high-density mineral fiber insulation or 3-1/2 inch fiberglass over top of duct and down sides to contact the ceiling. Secure in place. See Illustration A. Protect duct for 10 feet from opening in ceiling.	Box the fan or diffuser (four sides and top) with 5/8 inch gypsum wallboard, 1-1/2 inch high-density mineral fiber, or 3-1/2 inch fiberglass, securely fastened, and Wrap duct completely with 1-1/2 inch high-density mineral fiber or 3-1/2 inch fiberglass, secured in place, or line joist cavity with 5/8 inch fire-taped gypsum wallboard. See Illustration C. In sprinklered buildings, protection is required for 10 feet from opening only.

[1] MPCT = Metal plate connected trusses
PWJ = Plywood web joists

[2] Fan box or diffuser grille and associated metal duct.

ADDITIONAL REQUIREMENTS.

1. The area of openings shall be limited to 100 square inches in 100 square feet aggregate with no opening greater than 8″ in diameter.
2. HVAC systems installed under permit shall be installed according to plan.
3. Fixtures and equipment shall be installed according to their listing.
4. Ventilation ducts in attics shall be wrapped with mineral fiber insulation and secured in place with metal hangers.
5. Fixtures protected with insulation shall be steel and IC rated.

ACTING CITY CLERK

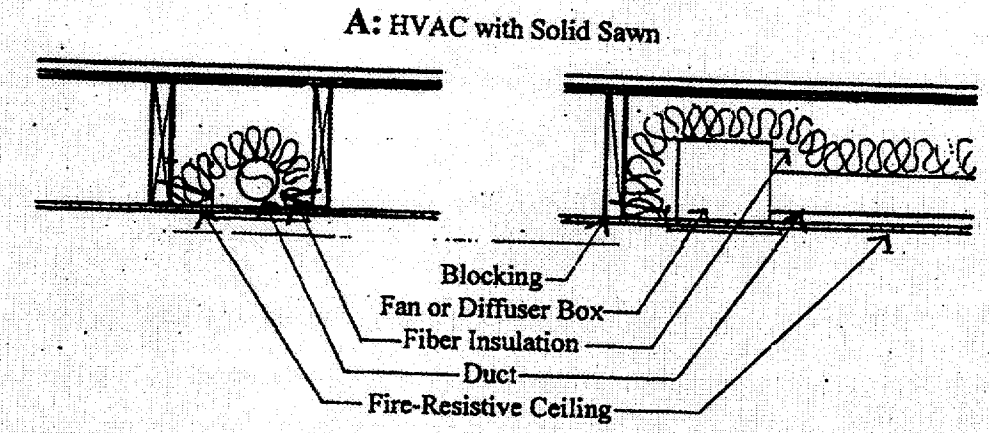

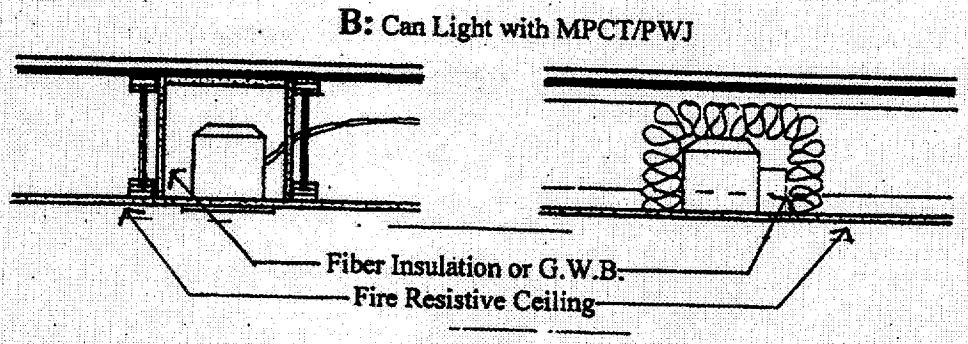

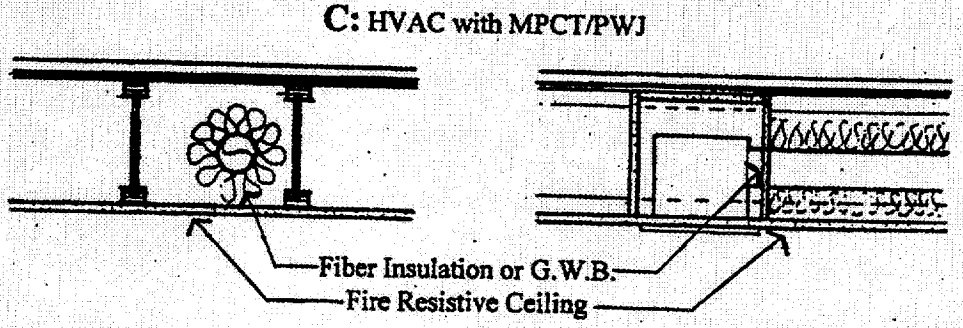

712.4.3 Nonfire-resistance-rated assemblies. Penetrations of horizontal assemblies without a required fire-resistance rating shall meet the requirements of Section 707 or shall comply with Sections 712.4.3.1 through 712.4.3.2.

ACTING CITY CLERK

712.4.3.1 Noncombustible penetrating items. Noncombustible penetrating items that connect not more than three stories are permitted provided that the annular space is filled with an approved noncombustible material to resist the free passage of flame and the products of combustion.

712.4.3.2 Penetrating items. Penetrating items that connect not more than two stories are permitted provided that the annular space is filled with an approved material to resist the free passage of flame and the products of combustion.

712.4.4 Ducts and air transfer openings. Penetrations of horizontal assemblies by ducts and air transfer openings that are not required to have dampers shall comply with this section. Ducts and air transfer openings that are protected with dampers shall comply with Section 716.

712.4.5 Dissimilar materials. Noncombustible penetrating items shall not connect to combustible materials beyond the point of firestopping unless it can be demonstrated that the fire-resistance integrity of the horizontal assembly is maintained.

712.4.6 Floor fire doors. Floor fire doors used to protect openings in fire-resistance-rated floors shall be tested in the horizontal position in accordance with ASTM E 119, and shall achieve a fire-resistance rating not less than the assembly being penetrated. Floor fire doors shall be labeled by an approved agency.

Section 63. Subsection 715.3.7 of the International Building Code, 2003 Edition, is amended as follows:

715.3.7 Door closing. Fire doors shall be self-closing or automatic-closing in accordance with this section.

Exception: Fire doors located in common walls separating sleeping units in Group R-1 shall be permitted without automatic-closing or self-closing devices.

ACTING CITY CLERK

715.3.7.1 Latch required. Unless otherwise specifically permitted, single fire doors and both leaves of pairs of side-hinged swinging fire doors shall be provided with an active latch bolt that will secure the door when it is closed.

715.3.7.2 Automatic-closing fire door assemblies. Automatic-closing fire door assemblies shall be self-closing in accordance with NFPA 80.

715.3.7.3 Smoke-activated doors. Automatic-closing fire doors installed in the following locations shall be automatic-closing by the actuation of smoke detectors installed in accordance with Section 907.10 or by loss of power to the smoke detector or hold-open device. Fire doors that are automatic-closing by smoke detection shall not have more than a 10-second delay before the door starts to close after the smoke detector is actuated.

1. Doors installed across a corridor.
2. Doors that protect openings in horizontal exits, exits or exit access corridors required to be of fire-resistance-rated construction.
3. Doors that protect openings in walls required to be fire-resistance rated by Table 302.1.1.
4. Doors installed in smoke barriers in accordance with Section 709.5.
5. Doors installed in fire partitions in accordance with Section 708.6.
6. Doors installed in a fire wall in accordance with Section 705.8.
7. Additional doors installed in accordance with Section 707.14.1.

715.3.7.4 Doors in pedestrian ways. Vertical sliding or vertical rolling steel fire doors in openings through which pedestrians travel shall be heat activated or activated by smoke detectors with alarm verification.

ACTING CITY CLERK

Section 64. Subsection 717.3 of the International Building Code, 2003 Edition, is amended as follows:

717.3 Draftstopping in floors. In combustible construction, draftstopping shall be installed to subdivide floor/ceiling assemblies in the locations prescribed in Sections 717.3.2 through 717.3.3.

717.3.1 Draftstopping materials. Draftstopping materials shall not be less than 0.5-inch (12.7 mm) gypsum board, 0.375-inch (9.5 mm) wood structural panel, 0.375-inch (9.5 mm) particleboard or other approved materials adequately supported. The integrity of draftstops shall be maintained.

Interpretation I717.3: Batts or blankets of mineral wool or glass fiber or other approved materials installed in such a manner as to be securely retained in place shall be permitted as acceptable draftstopping material.

717.3.2 Groups R-1, R-2, R-3 and R-4. Draftstopping shall be provided in floor/ceiling spaces in Group R-1 buildings, in Group R-2 buildings as applicable in Section 101.2 with three or more dwelling units, in Group R-3 buildings as applicable in Section 101.2 with two dwelling units and in Group R-4 buildings. Draftstopping shall be located above and in line with the dwelling unit and sleeping unit separations.

Exceptions:

1. Draftstopping is not required in buildings equipped throughout with an automatic sprinkler system in accordance with Section 903.3.1.1.
2. Draftstopping is not required in buildings equipped throughout with an automatic sprinkler system in accordance with Section 903.3.1.2, provided that automatic sprinklers are also installed in the combustible concealed spaces.

717.3.3 Other groups. In other groups, draftstopping shall be installed so that horizontal floor areas do not exceed 1,000 square feet (93 m2).

ACTING CITY CLERK

Exception: Draftstopping is not required in buildings equipped throughout with an automatic sprinkler system in accordance with Section 903.3.1.1.

Section 65. Subsection 717.5 of the International Building Code, 2003 Edition, is amended as follows:

717.5 Combustibles in concealed spaces in Type I or II construction. Combustibles shall not be permitted in concealed spaces of buildings of Type I or II construction.

Exceptions:

1. Combustible materials in accordance with Section 603.
2. Combustible materials complying with Section 602 of the *International Mechanical Code*.
3. Class A interior finish materials.
4. Combustible piping within partitions or enclosed shafts installed in accordance with the provisions of this code. Combustible piping shall be permitted within concealed ceiling spaces where installed in accordance with the *International Mechanical Code* and the *((~~International~~))* *Uniform Plumbing Code.*

Section 66. Subsection 901.1 of the International Building Code, 2003 Edition, is amended as follows:

901.1 Scope. The provisions of this chapter shall specify where fire protection systems are required and shall apply to the design, installation and operation of fire protection systems. For the purposes of this chapter, fire walls not located at a property line do not create separate buildings.

ACTING CITY CLERK

Section 67. Subsection 901.5 of the International Building Code, 2003 Edition, is amended as follows:

901.5 Acceptance tests. Fire protection systems shall be tested in accordance with the requirements of this code, ((~~and~~)) the *International Fire Code* and rules promulgated by the building official and fire code official. When required, the tests shall be conducted in the presence of the building official. Tests required by this code, the *International Fire Code* and the standards listed in this code shall be conducted at the expense of the owner or the owner's representative. It shall be unlawful to occupy portions of a structure until the required fire protection systems within that portion of the structure have been tested and approved.

Section 68. Subsection 902 of the International Building Code, 2003 Edition, is amended by adding the following definitions:

FIRE DETECTION SYSTEM. A system of smoke or heat detectors monitored at an approved central station, with no requirement for notification appliances in the building.

[W] PORTABLE SCHOOL CLASSROOM A structure, transportable in one or more sections, which requires a chassis to be transported, and is designed to be used as an educational space with or without a permanent foundation. The structure shall be trailerable and capable of being demounted and relocated to other locations as needs arise.

Section 69. Subsections 903.2, 903.3 and 903.4 of the International Building Code, 2003 Edition, are amended as follows:

[F] 903.2 Where required. Approved automatic sprinkler systems in new buildings and structures shall be provided in the locations described in this section.

Exception: Spaces or areas ((~~in telecommunications buildings~~)) used exclusively for telecommunications equipment, associated electrical power distribution equipment, and

ACTING CITY CLERK

batteries ((~~and standby engines~~)), provided those spaces or areas are equipped throughout with an automatic ((~~fire alarm~~)) smoke detection system and are separated from the remainder of the building by a wall with a fire-resistance rating of not less than 1 hour and a floor/ceiling assembly with a fire-resistance rating of not less than 2 hours.

[F] 903.2.1 Group A. An automatic sprinkler system shall be provided throughout buildings and portions thereof used as Group A occupancies as provided in this section. For Group A-1, A-2, A-3 and A-4 occupancies, the automatic sprinkler system shall be provided throughout the floor area where the Group A-1, A-2, A-3 or A-4 occupancy is located, and in all floors between the Group A occupancy and the level of exit discharge. For Group A-5 occupancies, the automatic sprinkler system shall be provided in the spaces indicated in Section 903.2.1.5.

[F] 903.2.1.1 Group A-1. An automatic sprinkler system shall be provided for Group A-1 occupancies where one of the following conditions exists:

1. The fire area exceeds 12,000 square feet (1115 m^2).
2. The fire area has an occupant load of 300 or more.
3. The fire area is located on a floor other than the level of exit discharge.
4. The fire area contains a multitheater complex.

[F] 903.2.1.2 Group A-2. An automatic sprinkler system shall be provided for Group A-2 occupancies where one of the following conditions exists:

1. The fire area exceeds 5,000 square feet (464.5 m^2).
2. The fire area has an occupant load of ((~~300~~)) 100 or more.
3. The fire area is located on a floor other than the level of exit discharge.

   Exception: Item 3 does not apply to fire areas that include space located one floor above the level of exit discharge where the occupant load of the upper floor is less than 50.

ACTING CITY CLERK

[F] 903.2.1.3 Group A-3. An automatic sprinkler system shall be provided for Group A-3 occupancies where one of the following conditions exists:

1. The fire area exceeds 12,000 square feet (1115 m^2).
2. The fire area has an occupant load of 300 or more.
3. The fire area is located on a floor other than the level of exit discharge.

Exception: Areas used exclusively as participant sports areas where the main floor area is located at the same level as the level of exit discharge of the main entrance and exit.

[F] 903.2.1.4 Group A-4. An automatic sprinkler system shall be provided for Group A-4 occupancies where one of the following conditions exists:

1. The fire area exceeds 12,000 square feet (1115 m^2).
2. The fire area has an occupant load of 300 or more.
3. The fire area is located on a floor other than the level of exit discharge.

Exception: Areas used exclusively as participant sports areas where the main floor area is located at the same level as the level of exit discharge of the main entrance and exit.

[F] 903.2.1.5 Group A-5. An automatic sprinkler system shall be provided in concession stands, retail areas, press boxes and other accessory use areas in excess of 1,000 square feet (93 m^2).

[F] 903.2.2 Group E. An automatic sprinkler system shall be provided for Group E occupancies as follows:

1. Throughout all Group E fire areas greater than 20,000 square feet (1858 m^2) in area.
2. Throughout every portion of educational buildings below the level of exit discharge.

ACTING CITY CLERK

Exception: An automatic sprinkler system is not required in any fire area or area below the level of exit discharge where every classroom throughout the building has at least one exterior exit door at ground level.

3. Throughout all newly constructed Group E Occupancies having an occupant load of 50 or more for more than 12 hours per week or four hours in any one day.

Exceptions:

1. Automatic sprinkler systems are not required in portable school classrooms , provided aggregate areas of clusters of portable school classrooms does not exceed 5,000 squire feet (1465m$^{2)}$; and clusters of portable school classrooms shall be separated as required in Chapter 5 of the Building Code.
2. Automatic sprinkler systems are not required in Group E day care.

[F] 903.2.3 Group F-1. An automatic sprinkler system shall be provided throughout all buildings containing a Group F-1 occupancy where one of the following conditions exists:

1. Where a Group F-1 fire area exceeds 12,000 square feet (1115 m^2);
2. Where a Group F-1 fire area is located more than three stories above grade; or
3. Where the combined area of all Group F-1 fire areas on all floors, including any mezzanines, exceeds 24,000 square feet (2230 m^2).

[F] 903.2.3.1 Woodworking operations. An automatic sprinkler system shall be provided throughout all Group F-1 occupancy fire areas that contain woodworking operations in excess of 2,500 square feet (232 m^2) in area which generate finely divided combustible waste or use finely divided combustible materials.

[F] 903.2.4 Group H. Automatic sprinkler systems shall be provided in high-hazard occupancies as required in Sections 903.2.4.1 through 903.2.4.3.

ACTING CITY CLERK

[F] 903.2.4.1 General. An automatic sprinkler system shall be installed in Group H occupancies.

[F] 903.2.4.2 Group H-5. An automatic sprinkler system shall be installed throughout buildings containing Group H-5 occupancies. The design of the sprinkler system shall not be less than that required by this code for the occupancy hazard classifications in accordance with Table 903.2.4.2. Where the design area of the sprinkler system consists of a corridor protected by one row of sprinklers, the maximum number of sprinklers required to be calculated is 13.

[F] 903.2.4.3 Pyroxylin plastics. An automatic sprinkler system shall be provided in buildings, or portions thereof, where cellulose nitrate film or pyroxylin plastics are manufactured, stored or handled in quantities exceeding 100 pounds (45 kg).

[F] 903.2.5.1 Group I. An automatic sprinkler system shall be provided throughout buildings with a Group I fire area.

Exception: An automatic sprinkler system installed in accordance with Section 903.3.1.2 or 903.3.1.3 shall be allowed in Group I-1 facilities.

903.2.5.2 Group LC. An automatic sprinkler system in accordance with Section 903.3 shall be provided throughout all buildings with a Group LC fire area.

Exception: An automatic sprinkler system need not be installed in any Group LC Occupancy licensed for six or fewer clients.

[F] 903.2.6 Group M. An automatic sprinkler system shall be provided throughout buildings containing a Group M occupancy where one of the following conditions exists:

1. Where a Group M fire area exceeds 12,000 square feet (1115 m^2);
2. Where a Group M fire area is located more than three stories above grade; or
3. Where the combined area of all Group M fire areas on all floors, including any mezzanines, exceeds 24,000 square feet (2230 m^2).

ACTING CITY CLERK

[F] 903.2.6.1 High-piled storage. An automatic sprinkler system shall be provided in accordance with the *International Fire Code* in all buildings of Group M where storage of merchandise is in high-piled or rack storage arrays.

[F] 903.2.7 Group R. An automatic sprinkler system installed in accordance with Section 903.3 shall be provided throughout all buildings with a Group R fire area.

Exception: Sprinkler systems are not required in buildings complying with the *International Residential Code* and Chapter 5 of the *International Fire Code.*

[F] 903.2.8 Group S-1. An automatic sprinkler system shall be provided throughout all buildings containing a Group S-1 occupancy where one of the following conditions exists:

1. A Group S-1 fire area exceeds 12,000 square feet (1115 m²);
2. A Group S-1 fire area is located more than three stories above grade; or
3. The combined area of all Group S-1 fire areas on all floors, including any mezzanines, exceeds 24,000 square feet (2230 m²).

[F] 903.2.8.1 Repair garages. An automatic sprinkler system shall be provided throughout all buildings used as repair garages in accordance with Section 406, as shown:

1. Buildings two or more stories in height, including basements, with a fire area containing a repair garage exceeding 10,000 square feet (929 m^2).
2. One-story buildings with a fire area containing a repair garage exceeding 12,000 square feet (1115 m^2).
3. Buildings with a repair garage servicing vehicles parked in the basement.

[F] 903.2.8.2 Bulk storage of tires. Buildings and structures where the area for the storage of tires exceeds 20,000 cubic feet (566 m^3) shall be equipped throughout with an automatic sprinkler system in accordance with Section 903.3.1.1.

ACTING CITY CLERK

903.2.8.3 Liquor Warehouses. An automatic sprinkler system shall be installed in liquor warehouses.

Interpretation I903.2.8: Stockrooms of retail liquor sales outlets are not liquor warehouses.

[F] 903.2.9 Group S-2. An automatic sprinkler system shall be provided throughout buildings classified as enclosed parking garages in accordance with Section 406.4 or where located beneath other groups.

Exception: Enclosed parking garages located beneath Group R-3 occupancies as applicable in Section 101.2.

[F] 903.2.9.1 Commercial parking garages. An automatic sprinkler system shall be provided throughout buildings used for storage of commercial trucks or buses where the fire area exceeds 5,000 square feet (464 m^2).

[F] 903.2.10 All occupancies except Groups R-3 and U. An automatic sprinkler system shall be installed in the locations set forth in Sections 903.2.10.1 through 903.2.10.1.3.

Exception: Group R-3 as applicable in Section 101.2 and Group U.

[F] 903.2.10.1 Stories and basements without openings. An automatic sprinkler system shall be installed throughout every story or basement of all buildings where the floor area exceeds 1,500 square feet (139.4 m^2) and where there is not provided at least one of the following types of exterior wall openings:

1. Openings below grade that lead directly to ground level by an exterior stairway complying with Section 1009 or an outside ramp complying with Section 1010. Openings shall be located in each 50 linear feet (15 240 mm), or fraction thereof, of exterior wall in the story on at least one side.
2. Openings entirely above the adjoining ground level totaling at least 20 square feet (1.86 m^2) in each 50 linear feet (15 240 mm), or fraction thereof, of exterior wall in the story on at least one side.

ACTING CITY CLERK

[F] 903.2.10.1.1 Opening dimensions and access. Openings shall have ((~~a~~)) minimum ((~~dimension~~)) height and width of not less than 30 inches (762 mm). Such openings shall be accessible to the fire department from the exterior and shall not be obstructed in a manner that fire fighting or rescue cannot be accomplished from the exterior.

[F] 903.2.10.1.2 Openings on one side only. Where openings in a story are provided on only one side and the opposite wall of such story is more than 75 feet (22 860 mm) from such openings, the story shall be equipped throughout with an approved automatic sprinkler system, or openings as specified above shall be provided on at least two sides of the story.

[F] 903.2.10.1.3 Basements. Where any portion of a basement is located more than 75 feet (22 860 mm) from openings required by Section 903.2.10.1, the basement shall be equipped throughout with an approved automatic sprinkler system.

[F] 903.2.10.2 Rubbish and linen chutes. An automatic sprinkler system shall be installed at the top of rubbish and linen chutes and in their terminal rooms. Chutes extending through three or more floors shall have additional sprinkler heads installed within such chutes at alternate floors. Chute sprinklers shall be accessible for servicing.

[F] 903.2.10.3 Buildings over 55 feet in height. An automatic sprinkler system shall be installed throughout buildings with a floor level having an occupant load of 30 or more that is located 55 feet (16 764 mm) or more above the lowest level of fire department vehicle access.

Exceptions:

1. Airport control towers.
2. Open parking structures.
3. Occupancies in Group F-2.

ACTING CITY CLERK

903.2.10.4 Basement storage and sale of combustible materials. An automatic sprinkler system shall be installed throughout basements that are not stories above grade plane that are used for storage or sale of combustible materials.

Exceptions:

1. Sprinklers are not required in portions of the basement not containing combustible materials and protected by a fire barrier with at least a one-hour fire-resistance rating.
2. Sprinklers are not required in storage rooms meeting the following criteria:
   - 2.1. The area of the room does not exceed 500 square feet;
   - 2.2. The room is protected by a fire barrier with at least a one-hour fire-resistance rating;
   - 2.3. The room contains no material classified as a flammable liquid, hazardous material or highly combustible material;
   - 2.4. The room is served by exterior fire access or interior access by a one-hour fire-resistance rated corridor.
   - 2.5 No more than three such rooms are permitted in any one basement.

[F] 903.2.11 During construction. Automatic sprinkler systems required during construction, alteration and demolition operations shall be provided in accordance with the *International Fire Code*.

[F] 903.2.12 Other hazards. Automatic sprinkler protection shall be provided for the hazards indicated in Sections 903.2.12.1 and 903.2.12.2.

[F] 903.2.12.1 Ducts conveying hazardous exhausts. Where required by the *International Mechanical Code*, automatic sprinklers shall be provided in ducts conveying hazardous exhaust, or flammable or combustible materials.

ACTING CITY CLERK

Exception: Ducts in which the largest cross-sectional diameter of the duct is less than 10 inches (254 mm).

[F] 903.2.12.2 Commercial cooking operations. An automatic sprinkler system shall be installed in commercial kitchen exhaust hood and duct system where an automatic sprinkler system is used to comply with Section 904.

[F] 903.2.13 Other required suppression systems. In addition to the requirements of Section 903.2, the provisions indicated in Table 903.2.13 also require the installation of a suppression system for certain buildings and areas.

[F] 903.3 Installation requirements. Automatic sprinkler systems shall be designed and installed in accordance with Sections 903.3.1 through 903.3.7.

[F] 903.3.1 Standards. Sprinkler systems shall be designed and installed in accordance with Section 903.3.1.1, 903.3.1.2 or 903.3.1.3 <u>and rules promulgated by the building official and fire code official</u>.

[F] 903.3.1.1 NFPA 13 sprinkler systems. Where the provisions of this code require that a building or portion thereof be equipped throughout with an automatic sprinkler system in accordance with Section 903.3.1.1, sprinklers shall be installed throughout in accordance with NFPA 13 except as provided in Section 903.3.1.1.1.

[F] 903.3.1.1.1 Exempt locations. Automatic sprinklers shall not be required in the following rooms or areas where such rooms or areas are protected with an approved automatic fire detection system in accordance with Section 907.2 that will respond to visible or invisible particles of combustion. Sprinklers shall not be omitted from any room merely because it is damp, of fire-resistance-rated construction or contains electrical equipment.

1. Any room where the application of water, or flame and water, constitutes a serious life or fire hazard <u>when approved by the fire code official</u>.

ACTING CITY CLERK

2. Any room or space where sprinklers are considered undesirable because of the nature of the contents, when approved by the fire code ~~building~~ official.
3. Generator and transformer rooms separated from the remainder of the building by walls and floor/ceiling or roof/ceiling assemblies having a fire-resistance rating of not less than 2 hours.
4. In rooms or areas that are of noncombustible construction with wholly noncombustible contents.

[F] 903.3.1.2 NFPA 13R sprinkler systems. Where allowed in LC Occupancies and buildings of Group R, up to and including four stories in height, automatic sprinkler systems shall be installed throughout in accordance with NFPA 13R.

((~~**[F] 903.3.1.2.1 Balconies.** Sprinkler protection shall be provided for exterior balconies and ground-floor patios of dwelling units where the building is of Type V construction. Sidewall sprinklers that are used to protect such areas shall be permitted to be located such that their deflectors are within 1 inch (25 mm) to 6 inches (152 mm) below the structural members, and a maximum distance of 14 inches (356 mm) below the deck of the exterior balconies that are constructed of open wood joist construction.~~))

[F] 903.3.1.3 NFPA 13D sprinkler systems. Where allowed, automatic sprinkler systems in one- and two-family dwellings shall be installed throughout in accordance with NFPA 13D. When approved by the fire code official, sprinkler systems in accordance with NFPA 13D may be installed in townhouses where each unit has its own water service.

ACTING CITY CLERK

[F] 903.3.2 Quick-response and residential sprinklers. Where automatic sprinkler systems are required by this code, quick-response or residential automatic sprinklers shall be installed in the following areas in accordance with Section 903.3.1 and their listings:

1. Throughout all spaces within a smoke compartment containing patient sleeping units in Group I-2 in accordance with this code.
2. Dwelling units, and sleeping units in Group R, LC and I-1 occupancies.
3. Light-hazard occupancies as defined in NFPA 13.

[F] 903.3.3 Obstructed locations. Automatic sprinklers shall be installed ((~~with due regard to obstructions that will delay activation or obstruct the water distribution pattern. A~~)) in accordance with NFPA 13 obstruction criteria and the listing of the sprinkler. In addition, automatic sprinklers shall be installed in or under covered kiosks, displays, booths, concession stands, or equipment that exceeds 4 feet (1219 mm) in width and depth. Not less than a 3-foot (914 mm) clearance shall be maintained between automatic sprinklers and the top of piles of combustible fibers.

Exceptions:

1. Kitchen equipment under exhaust hoods protected with a fire-extinguishing system in accordance with Section 904.
2. Temporary covered booths, kiosks, or concession stands less than 300 square feet in area that are in spaces operating under a temporary place of assembly permit.

[F] 903.3.4 Actuation. Automatic sprinkler systems shall be automatically actuated unless specifically provided for in this code.

[F] 903.3.5 Water supplies. Water supplies for automatic sprinkler systems shall comply with this section and the standards referenced in Section 903.3.1. The potable water supply

ACTING CITY CLERK

shall be protected against backflow in accordance with the requirements of this section and the *((~~International~~))* *Uniform Plumbing Code.*

[F] 903.3.5.1 Domestic services. Where the domestic service provides the water supply for the automatic sprinkler system, the supply shall be in accordance with this section.

[F] 903.3.5.1.1 Limited area sprinkler systems. Limited area sprinkler systems serving fewer than 20 sprinklers on any single connection are permitted to be connected to the domestic service where a wet automatic standpipe is not available. Limited area sprinkler systems connected to domestic water supplies shall comply with each of the following requirements:

1. Valves shall not be installed between the domestic water riser control valve and the sprinklers.

Exception: An approved indicating control valve supervised in the open position in accordance with Section 903.4.

2. The domestic service shall be capable of supplying the simultaneous domestic demand and the sprinkler demand required to be hydraulically calculated by NFPA 13, NFPA 13R or NFPA 13D.

[F] 903.3.5.1.2 ((~~Residential e~~))Combination services. A single combination water supply shall be permitted for buildings that are not high-rise buildings provided that the domestic demand is added to the sprinkler demand as required by NFPA 13R.

[F] 903.3.5.2 Secondary water supply. A secondary on-site water supply ((~~equal to the hydraulically calculated sprinkler demand, including the hose stream requirement,~~)) of at least 15,000 gallons automatically available to the sprinkler system shall be provided for high-rise buildings ((~~in Seismic Design Category C, D, E or F as determined by this~~

ACTING CITY CLERK

~~code. The secondary water supply shall have a duration not less than 30 minutes as determined by the occupancy hazard classification in accordance with NFPA 13.~~))

Exception: Existing buildings, including those undergoing substantial alteration.

[F] 903.3.6 Hose threads. Fire hose threads used in connection with automatic sprinkler systems shall be approved and compatible with fire department hose threads.

[F] 903.3.7 Fire department connections. The location of fire department connections shall be approved by the building official.

[F] 903.3.7.1 Locking fire department connection (FDC) caps. The fire code official is authorized to require locking FDC caps on fire department connections for water-based fire protection systems where the responding fire department carries appropriate key wrenches for removal.

903.3.8 System Type. Sprinkler systems protecting dwelling units and sleeping units shall be wet pipe systems.

903.3.9 Balconies. Sprinkler protection shall be provided for exterior balconies and ground-floor patios of dwelling units in buildings with combustible siding when either

a. The balcony or patio is recessed 4 feet or more into the building; or

b. The roof or balcony above exceeds 4 feet in depth; or

c. The deck is enclosed. A deck is considered enclosed if less than 25% of its perimeter is open to the exterior. Solid railings less than 4 feet in height are not considered enclosures.

Sprinklers shall be provided in storage closets on decks.

[F] 903.4 Sprinkler system monitoring and alarms. All valves controlling the water supply for automatic sprinkler systems, pumps, tanks, water levels and temperatures, critical air pressures and water-flow switches on all sprinkler systems shall be electrically supervised.

Exceptions:

ACTING CITY CLERK

1. Non-required ((A))automatic sprinkler systems protecting one- and two-family dwellings.
2. Limited area systems serving fewer than 20 sprinklers.
3. Automatic sprinkler systems installed in accordance with NFPA 13R where a common supply main is used to supply both domestic water and the automatic sprinkler systems and a separate shutoff valve for the automatic sprinkler system is not provided.
4. Jockey pump control valves that are sealed or locked in the open position.
5. Control valves to commercial kitchen hoods, paint spray booths or dip tanks that are sealed or locked in the open position.
6. Valves controlling the fuel supply to fire pump engines that are sealed or locked in the open position.
7. Trim valves to pressure switches in dry, preaction and deluge sprinkler systems that are sealed or locked in the open position.

[F] 903.4.1 Signals. Alarm, supervisory and trouble signals shall be distinctly different and automatically transmitted to ((~~an approved central station, remote supervising station or proprietary supervising station as defined in NFPA 72 or, when approved by the building official, shall sound an audible signal at a constantly attended location.~~)) a central station service that complies with Section 903.4 of the Seattle Fire Code.

Exceptions:

1. Underground key or hub valves in roadway boxes provided by the municipality or public utility are not required to be monitored.
2. Backflow prevention device test valves, located in limited area sprinkler system supply piping, shall be locked in the open position. In occupancies required to be equipped with a fire alarm system, the backflow preventer valves shall be

ACTING CITY CLERK

electrically supervised by a tamper switch installed in accordance with NFPA 72 and separately annunciated.

[F] 903.4.2 Alarms. Approved audible devices shall be connected to every automatic sprinkler system. Such sprinkler water-flow alarm devices shall be activated by water flow equivalent to the flow of a single sprinkler of the smallest orifice size installed in the system. Alarm devices shall be provided on the exterior of the building in an approved location. Where a fire alarm system is installed, actuation of the automatic sprinkler system shall actuate the building fire alarm system.

[F] 903.4.3 Floor control valves. Approved supervised indicating control valves shall be provided at the point of connection to the riser on each floor in high-rise buildings.

Section 70. Subsection 904.3 of the International Building Code, 2003 Edition, is amended as follows:

[F] 904.3 Installation. Automatic fire-extinguishing systems shall be installed in accordance with this section and rules promulgated by the building official and fire code official.

[F] 904.3.1 Electrical wiring. Electrical wiring shall be in accordance with the ((~~ICC~~)) Seattle *Electrical Code.*

[F] 904.3.2 Actuation. Automatic fire-extinguishing systems shall be automatically actuated and provided with a manual means of actuation in accordance with Section 904.11.1.

[F] 904.3.3 System interlocking. Automatic equipment interlocks with fuel shutoffs, ventilation controls, door closers, window shutters, conveyor openings, smoke and heat vents and other features necessary for proper operation of the fire-extinguishing system shall be provided as required by the design and installation standard utilized for the hazard.

ACTING CITY CLERK

[F] 904.3.4 Alarms and warning signs. Where alarms are required to indicate the operation of automatic fire-extinguishing systems, distinctive audible and visible alarms and warning signs shall be provided to warn of pending agent discharge. Where exposure to automatic-extinguishing agents poses a hazard to persons and a delay is required to ensure the evacuation of occupants before agent discharge, a separate warning signal shall be provided to alert occupants once agent discharge has begun. Audible signals shall be in accordance with Section 907.9.2.

[F] 904.3.5 Monitoring. Where a building fire alarm system is installed, automatic fire-extinguishing systems shall be monitored by the building fire alarm system in accordance with NFPA 72.

Section 71. Subsections 904.6 through 904.11 of the International Building Code, 2003 Edition, are amended as follows:

[F] 904.6 Dry-chemical systems. Dry-chemical extinguishing systems shall be installed, maintained, periodically inspected and tested in accordance with NFPA 17, rules promulgated by the building official and fire code official and their listing.

[F] 904.7 Foam systems. Foam-extinguishing systems shall be installed, maintained, periodically inspected and tested in accordance with NFPA 11 and NFPA 16, rules promulgated by the building official and fire code official and their listing.

[F] 904.8 Carbon dioxide systems. Carbon dioxide extinguishing systems shall be installed, maintained, periodically inspected and tested in accordance with NFPA 12, rules promulgated by the building official and fire code official and their listing.

[F] 904.9 Halon systems. Halogenated extinguishing systems shall be installed, maintained, periodically inspected and tested in accordance with NFPA 12A, rules promulgated by the building official and fire code official and their listing.

ACTING CITY CLERK

[F] 904.10 Clean-agent systems. Clean-agent fire-extinguishing systems shall be installed, maintained, periodically inspected and tested in accordance with NFPA 2001, rules promulgated by the building official and fire code official and their listing.

[F] 904.11 Commercial cooking systems. The automatic fire-extinguishing system for commercial cooking systems shall be of a type recognized for protection of commercial cooking equipment and exhaust systems of the type and arrangement protected. Pre-engineered automatic dry- and wet-chemical extinguishing systems shall be tested in accordance with UL 300 and listed and labeled for the intended application. Other types of automatic fire-extinguishing systems shall be listed and labeled for specific use as protection for commercial cooking operations. The system shall be installed in accordance with this code, its listing, rules promulgated by the building official and fire code official and the manufacturer's installation instructions. Automatic fire-extinguishing systems of the following types shall be installed in accordance with the referenced standard indicated, as shown:

1. Carbon dioxide extinguishing systems, NFPA 12.
2. Automatic sprinkler systems, NFPA 13.
3. Foam-water sprinkler system or foam-water spray systems, NFPA 16.
4. Dry-chemical extinguishing systems, NFPA 17.
5. Wet-chemical extinguishing systems, NFPA 17A.

Exception: Factory-built commercial cooking recirculating systems that are tested in accordance with UL 197, and listed, labeled and installed in accordance with Section 304.1 of the *International Mechanical Code*.

[F] 904.11.1 Manual system operation. A manual actuation device shall be located at or near a means of egress from the cooking area, a minimum of 10 feet (3048 mm) and a maximum of 20 feet (6096 mm) from the kitchen exhaust system. The manual actuation device shall be located a minimum of 4 feet (1219 mm) and a maximum of 5 feet (1524

ACTING CITY CLERK

mm) above the floor. The manual actuation shall require a maximum force of 40 pounds (178 N) and a maximum movement of 14 inches (356 mm) to actuate the fire suppression system.

Exception: Automatic sprinkler systems shall not be required to be equipped with manual actuation means.

[F] 904.11.2 System interconnection. The actuation of the fire suppression system shall automatically shut down the fuel or electrical power supply to the cooking equipment. The fuel and electrical supply reset shall be manual.

[F] 904.11.3 Carbon dioxide systems. When carbon dioxide systems are used, there shall be a nozzle at the top of the ventilating duct. Additional nozzles that are symmetrically arranged to give uniform distribution shall be installed within vertical ducts exceeding 20 feet (6096 mm) and horizontal ducts exceeding 50 feet (15 240 mm). Dampers shall be installed at either the top or the bottom of the duct and shall be arranged to operate automatically upon activation of the fire-extinguishing system. Where the damper is installed at the top of the duct, the top nozzle shall be immediately below the damper. Automatic carbon dioxide fire-extinguishing systems shall be sufficiently sized to protect against all hazards venting through a common duct simultaneously.

[F] 904.11.3.1 Ventilation system. Commercial-type cooking equipment protected by an automatic carbon dioxide-extinguishing system shall be arranged to shut off the ventilation system upon activation.

[F] 904.11.4 Special provisions for automatic sprinkler systems. Automatic sprinkler systems protecting commercial-type cooking equipment shall be supplied from a separate, readily accessible, indicating-type control valve that is identified.

[F] 904.11.4.1 Listed sprinklers. Sprinklers used for the protection of fryers shall be listed for that application and installed in accordance with their listing.

ACTING CITY CLERK

Section 72. Subsections 905.2 through 905.4 of the International Building Code, 2003 Edition, are amended as follows:

[F] 905.2 Installation standards. Standpipe systems shall be installed in accordance with this section ((~~and~~)) NFPA 14 and rules promulgated by the building official and fire code official.

[F] 905.3 Required installations. Standpipe systems shall be installed where required by Sections 905.3.1 through 905.3.6 and in the locations indicated in Sections 905.4, 905.5 and 905.6. Standpipe systems are permitted to be combined with automatic sprinkler systems.

Exception: Standpipe systems are not required in Group R-3 occupancies as applicable in Section 101.2.

[F] 905.3.1 Building height. Class III standpipe systems shall be installed throughout buildings where the floor level of the highest story is located more than 30 feet (9144 mm) above the lowest level of fire department vehicle access, or where the floor level of the lowest story is located more than 30 feet (9144 mm) below the highest level of fire department vehicle access.

Exceptions:

1. Class I standpipes are allowed in buildings equipped throughout with an automatic sprinkler system in accordance with Section 903.3.1.1 or 903.3.1.2.
2. Class I manual standpipes are allowed in open parking garages where the highest floor is located not more than 150 feet (45 720 mm) above the lowest level of fire department vehicle access.
3. Class I manual dry standpipes are allowed in open parking garages that are subject to freezing temperatures, provided that the hose connections are located as required for Class II standpipes in accordance with Section 905.5.

ACTING CITY CLERK

4. Class I standpipes are allowed in basements equipped throughout with an automatic sprinkler system.

[F] 905.3.2 Group A. Class I automatic or manual wet standpipes shall be provided in nonsprinklered Group A buildings having an occupant load exceeding 1,000 persons.

Exceptions:

1. Open-air-seating spaces without enclosed spaces.

((~~2. Class I automatic dry and semiautomatic dry standpipes or manual wet standpipes are allowed in buildings where the highest floor surface used for human occupancy is 75 feet (22 860 mm) or less above the lowest level of fire department vehicle access.~~))

2. Class I manual dry standpipes are allowed in areas subject to freezing.

[F] 905.3.3 Covered mall buildings. A covered mall building shall be equipped throughout with a Class I manual standpipe system. ((~~where required by Section 905.3. Covered mall buildings not required to be equipped with a standpipe system by Section 905.3 shall be equipped with Class I hose connections connected to a system sized to deliver 250 gallons per minute (946.4 L/min.) at the most hydraulically remote outlet.~~)) Hose connections shall be provided at each of the following locations:

1. Within the mall at the entrance to each exit passageway or corridor.
2. At each floor-level landing within enclosed stairways opening directly on the mall.
3. At exterior public entrances to the mall.

[F] 905.3.4 Stages. Stages greater than 1,000 square feet in area (93 m^2) shall be equipped with a Class III wet standpipe system with 1.5-inch and 2.5-inch (38 mm and 64 mm) hose connections on each side of the stage.

Exception: Where the building or area is equipped throughout with an automatic sprinkler system, the hose connections are allowed to be supplied from the automatic

ACTING CITY CLERK

sprinkler system and shall have a flow rate of not less than that required by NFPA 14 for Class III standpipes.

[F] 905.3.4.1 Hose and cabinet. The 1.5-inch (38 mm) hose connections shall be equipped with sufficient lengths of 1.5-inch (38 mm) hose to provide fire protection for the stage area. Hose connections shall be equipped with an approved adjustable fog nozzle and be mounted in a cabinet or on a rack.

[F] 905.3.5 Underground buildings. Underground buildings shall be equipped throughout with a Class I automatic wet or manual wet standpipe system.

[F] 905.3.6 Helistops and heliports. Buildings with a helistop or heliport that are equipped with a standpipe shall extend the standpipe to the roof level on which the helistop or heliport is located in accordance with Section 1107.5 of the *International Fire Code*.

[F] 905.4 Location of Class I standpipe hose connections. Class I standpipe hose connections shall be provided in all of the following locations:

1. In every required stairway, a hose connection shall be provided for each floor level above or below grade. Hose connections shall be located at an intermediate floor level landing between floors, unless otherwise approved by the building official.
2. On each side of the wall adjacent to the exit opening of a horizontal exit.
3. In every exit passageway at the entrance from the exit passageway to other areas of a building.
4. In covered mall buildings, adjacent to each exterior public entrance to the mall and adjacent to each entrance from an exit passageway or exit corridor to the mall, and at each floor-level landing within enclosed stairways opening directly to the mall.
5. ((~~Where the roof has a slope less than four units vertical in 12 units horizontal (33.3 percent slope), each~~)) At least one standpipe shall be provided with ((~~a~~)) two 2-1/2 inch hose connections located ((~~either~~)) on the roof at least 10 feet from the roof edge,

ACTION CITY CLERK

skylight, light well or other opening, unless protected by a 42 inch high guardrail or equivalent. Additional roof connections shall be provided so that all portions of the roof are within 200 feet of hose travel distance from a standpipe hose connection. Where stairs are required to provide roof access, the standpipe roof connections shall be located adjacent to the stair opening. Roof hose connections shall be operable without entering the building. ((~~or~~))

Roof connections in high-rise buildings are permitted to be located at the highest landing of stairways with stair access to the roof. An additional hose connection shall be provided at the top of the most hydraulically remote standpipe for testing purposes.

6. Where the most remote portion of a nonsprinklered floor or story is more than 150 feet (45 720 mm) of hose travel distance from a hose connection or the most remote portion of a sprinklered floor or story is more than 200 feet (60 960 mm) of hose travel distance from a hose connection, additional hose connections shall be provided in protected locations that are accessed through protected enclosures. Additional hose connections in parking garages are not required to be accessed through or located in protected enclosures. Protected enclosures and protected locations are either smoke barriers or exit enclosures constructed in accordance with this code. ((~~, the building official is authorized to require that additional hose connections be provided in approved locations.~~))

[F] 905.4.1 Protection. Risers and laterals of Class I standpipe systems not located within an enclosed stairway or pressurized enclosure shall be protected by a degree of fire resistance equal to that required for vertical enclosures in the building in which they are located.

ACTING CITY CLERK

Exception: In buildings equipped throughout with an approved automatic sprinkler system, laterals that are not located within an enclosed stairway or pressurized enclosure are not required to be enclosed within fire-resistance-rated construction.

[F] 905.4.2 Interconnection. In buildings where more than one standpipe is provided, the standpipes shall be interconnected in accordance with NFPA 14.

Section 73. Subsections 905.8 and 905.9 of the International Building Code, 2003 Edition, are amended as follows:

[F] 905.8 Dry standpipes. Dry standpipes shall not be installed in high-rise buildings.

((~~**Exception:** Where subject to freezing and in accordance with NFPA 14.~~))

[F] 905.9 Valve supervision. Valves controlling water supplies shall be supervised in the open position so that a change in the normal position of the valve will generate a supervisory signal at the supervising station required by Section 903.4. Where a fire alarm system is provided, a signal shall also be transmitted to the control unit.

Exceptions:

1. Valves to underground key or hub valves in roadway boxes provided by the municipality or public utility do not require supervision.
2. Valves locked in the normal position and inspected as provided in this code in buildings not equipped with a fire alarm system and not provided with monitoring by a central station service.

Section 74. Subsections 907.1 and 907.2 of the International Building Code, 2003 Edition, are amended as follows:

[F] 907.1 General. This section covers the application, installation, performance and maintenance of fire alarm systems and their components. All fire alarm and fire detection

ACTING CITY CLERK

systems shall be designed, installed and maintained in accordance with the requirements of NFPA 72, except for the locations of initiating devices which shall comply with Section 907 of the Seattle Fire Code.

Buildings required by this section to be provided with a fire alarm system shall be provided with a single fire alarm system.

Exception: A single system is not required in existing buildings that are being increased in size and the existing fire alarm system is unable to expand into the new space. In those cases the multiple systems shall be arranged as described below for non-required fire alarm systems.

Buildings not required by this section to be provided with a fire alarm system may be provided with multiple partial fire alarm systems provided:

1. The systems are connected so that all systems simultaneously activate alarm notification appliances upon a signal from any of the fire alarm systems in the building.
2. The location of each system's annunciator panel (or main panel) is also provided with annunciator panels with reset capability for every other system in the building.

[F] 907.1.1 Construction documents. Construction documents for fire alarm systems shall be submitted for review and approval prior to system installation. Construction documents shall include, but not be limited to, all of the following:

1. A floor plan which indicates the use of all rooms.
2. Locations of alarm-initiating and notification appliances.
3. Alarm control and trouble signaling equipment.
4. Annunciation.
5. Power connection.
6. Battery calculations.
7. Conductor type and sizes.

ACTING CITY CLERK

8. Voltage drop calculations.
9. Manufacturers, model numbers and listing information for equipment, devices and materials.
10. Details of ceiling height and construction.
11. The interface of fire safety control functions

[F] 907.1.2 Equipment. Systems and their components shall be listed and approved for the purpose for which they are installed.

[F] 907.2 Where required. An approved manual, automatic or manual and automatic fire alarm system shall be provided in accordance with Sections 907.2.1 through 907.2.23. Where automatic sprinkler protection, installed in accordance with Section 903.3.1.1 or 903.3.1.2, is provided and connected to the building fire alarm system, automatic heat detection required by this section shall not be required. ((~~An approved automatic fire detection system shall be installed in accordance with the provisions of this code and NFPA 72. Devices, combinations of devices, appliances and equipment shall comply with Section 907.1.2. The automatic fire detectors shall be smoke detectors, except that an approved alternative type of detector shall be installed in spaces such as boiler rooms where, during normal operation, products of combustion are present in sufficient quantity to actuate a smoke detector.~~))

[F] 907.2.1 Group A. A manual fire alarm system shall be installed in accordance with NFPA 72 in Group A occupancies having an occupant load of 300 or more. Portions of Group E occupancies occupied for assembly purposes shall be provided with a fire alarm system as required for the Group E occupancy.

Exception: Manual fire alarm boxes are not required where the building is equipped throughout with an automatic sprinkler system and the notification appliances will activate upon sprinkler water flow.

ACTING CITY CLERK

[F] 907.2.1.1 System initiation in Group A occupancies with an occupant load of 1,000 or more. Activation of the fire alarm in Group A occupancies with an occupant load of 1,000 or more shall initiate a signal using an emergency voice/alarm communications system in accordance with NFPA 72.

Exception: Where approved, the prerecorded announcement is allowed to be manually deactivated for a period of time, not to exceed 3 minutes, for the sole purpose of allowing a live voice announcement from an approved, constantly attended location.

[F] 907.2.1.2 Emergency power. Emergency voice/alarm communications systems shall be provided with an approved emergency power source.

[F] 907.2.2 Group B. A manual fire alarm system shall be installed in Group B occupancies having an occupant load of 500 or more persons or more than 100 persons above or below the lowest level of exit discharge.

Exception: Manual fire alarm boxes are not required where the building is equipped throughout with an automatic sprinkler system and the alarm notification appliances will activate upon sprinkler water flow.

[F] 907.2.3 Group E. A manual fire alarm system shall be installed in Group E occupancies. When automatic sprinkler systems or smoke detectors are installed, such systems or detectors shall be connected to the building fire alarm system.

Exceptions:

1. Group E occupancies with an occupant load of less than 50.
2. Manual fire alarm boxes are not required in Group E occupancies where all the following apply:
   - 2.1. Interior corridors are protected by smoke detectors with alarm verification.

ACTING CITY CLERK

2.2. Auditoriums, cafeterias, gymnasiums and the like are protected by heat detectors or other approved detection devices.

2.3. Shops and laboratories involving dusts or vapors are protected by heat detectors or other approved detection devices.

2.4. Off-premises monitoring is provided.

2.5. The capability to activate the evacuation signal from a central point is provided.

2.6. In buildings where normally occupied spaces are provided with a two-way communication system between such spaces and a constantly attended receiving station from where a general evacuation alarm can be sounded, except in locations specifically designated by the building official.

[F] 907.2.4 Group F. A manual fire alarm system shall be installed in Group F occupancies that are two or more stories in height and have an occupant load of 500 or more above or below the lowest level of exit discharge.

Exception: Manual fire alarm boxes are not required if the building is equipped throughout with an automatic sprinkler system and the notification appliances will activate upon sprinkler water flow.

[F] 907.2.5 Group H. A manual fire alarm system shall be installed in Group H-5 occupancies and in occupancies used for the manufacture of organic coatings. An automatic smoke detection system shall be installed ((~~for~~)) <u>in spaces containing</u> highly toxic gases, organic peroxides and oxidizers in accordance with Chapters 37, 39 and 40, respectively, of the *International Fire Code*.

ACTING CITY CLERK

[F] 907.2.6 Group I. A manual fire alarm system and an automatic ((~~fire~~)) smoke detection system shall be installed in Group I occupancies. An electrically supervised, automatic smoke detection system shall be provided in waiting areas that are open to corridors.

Exception: Manual fire alarm boxes in patient sleeping areas of Group I-1 and I-2 occupancies shall not be required at exits if located at all nurses' control stations or other constantly attended staff locations, provided such stations are visible and continuously accessible and that travel distances required in Section 907.3.1 are not exceeded.

[F] 907.2.6.1 Group I-2. Corridors in nursing homes (both intermediate-care and skilled nursing facilities), detoxification facilities and spaces open to the corridors shall be equipped with an automatic ((~~fire~~)) smoke detection system.

Exceptions:

1. Corridor smoke detection is not required in smoke compartments that contain patient sleeping rooms where patient sleeping units are provided with smoke detectors that comply with UL 268. Such detectors shall provide a visual display on the corridor side of each patient sleeping unit and an audible and visual alarm at the nursing station attending each unit.
2. Corridor smoke detection is not required in smoke compartments that contain patient sleeping rooms where patient sleeping unit doors are equipped with automatic door-closing devices with integral smoke detectors on the unit sides installed in accordance with their listing, provided that the integral detectors perform the required alerting function.

[F] 907.2.6.2 Group I-3. Group I-3 occupancies shall be equipped with a manual and automatic fire alarm system installed for alerting staff.

ACTING CITY CLERK

[F] 907.2.6.2.1 System initiation. Actuation of an automatic fire-extinguishing system, a manual fire alarm box or a fire detector shall initiate an approved fire alarm signal which automatically notifies staff. Presignal systems shall not be used.

[F] 907.2.6.2.2 Manual fire alarm boxes. Manual fire alarm boxes are not required to be located in accordance with Section 907.3 where the fire alarm boxes are provided at staff-attended locations having direct supervision over areas where manual fire alarm boxes have been omitted. Manual fire alarm boxes shall be permitted to be locked in areas occupied by detainees, provided that staff members are present within the subject area and have keys readily available to operate the manual fire alarm boxes.

[F] 907.2.6.2.3 Smoke detectors. An approved automatic smoke detection system shall be installed throughout resident housing areas, including sleeping areas and contiguous day rooms, group activity spaces and other common spaces normally accessible to residents.

Exceptions:

1. Other approved smoke detection arrangements providing equivalent protection including, but not limited to, placing detectors in exhaust ducts from cells or behind protective guards listed for the purpose are allowed when necessary to prevent damage or tampering.
2. Sleeping units in Use Conditions 2 and 3.
3. Smoke detectors are not required in sleeping units with four or fewer occupants in smoke compartments that are equipped throughout with an approved automatic sprinkler system.

[F] 907.2.7 Group M. A manual fire alarm system shall be installed in Group M occupancies, other than covered mall buildings complying with Section 402, having an

ACTING CITY CLERK

occupant load of 500 or more persons or more than 100 persons above or below the lowest level of exit discharge.

Exception: Manual fire alarm boxes are not required if the building is equipped throughout with an automatic sprinkler system and the alarm notification appliances will activate upon sprinkler water flow.

((~~**[F] 907.2.7.1 Occupant notification.** During times that the building is occupied, in lieu of the automatic activation of alarm notification appliances, the manual fire alarm system shall be allowed to activate an alarm signal at a constantly attended location from which evacuation instructions shall be initiated over an emergency voice/alarm communication system installed in accordance with Section 907.2.12.2. The emergency voice/alarm communication system shall be allowed to be used for other announcements, provided the manual fire alarm use takes precedence over any other use.~~))

[F] 907.2.8 Group R-1. Fire alarm systems shall be installed in Group R-1 occupancies as required in Sections 907.2.8.1 through 907.2.8.3.

[F] 907.2.8.1 Manual <u>and automatic</u> fire alarm system. A ((~~manual~~)) fire alarm system shall be installed in Group R-1 occupancies.

Exception((s)):

((~~1.~~)) A ((~~manual~~)) fire alarm system is not required in buildings not over two stories in height where all individual guestrooms and contiguous attic and crawl spaces are separated from each other and public or common areas by at least 1-hour fire partitions and each individual guestroom has an exit directly to a public way, exit court or yard.

((~~2. Manual fire alarm boxes are not required throughout the building when the following conditions are met:~~

ACTING CITY CLERK

~~2.1. The building is equipped throughout with an automatic sprinkler system installed in accordance with Section 903.3.1.1 or 903.3.1.2.~~

~~2.2. The notification appliances will activate upon sprinkler water flow, and~~

~~2.3. At least one manual fire alarm box is installed at an approved location.~~))

[F] ((~~907.2.8.2~~)) 907.2.8.1.1 Automatic ((~~fire alarm system~~)) detection. ((~~An automatic fire alarm system~~)) Automatic smoke detectors shall be installed throughout all interior corridors serving guestrooms. Automatic heat detectors shall be provided in any unsprinklered interior areas not within guestrooms other than attics and crawl spaces.

Exception: ((~~An automatic fire detection system is~~)) Smoke detectors are not required in buildings that do not have interior corridors serving guestrooms and each guestroom has a means of egress door opening directly to an exterior exit access that leads directly to an exit.

[F] ((~~907.2.8.3~~)) 907.2.8.1.2 Smoke alarms. Smoke alarms shall be installed as required by Section 907.2.10. In buildings that are not equipped throughout with an automatic sprinkler system installed in accordance with Section 903.3.1.1 or 903.3.1.2, the smoke alarms in guestrooms shall be connected to an emergency electrical system and shall be annunciated by guestroom at a constantly attended location from which the fire alarm system is capable of being manually activated

[F] 907.2.9 Group R-2. A manual and automatic fire alarm system shall be installed in Group R-2 occupancies where:

1. Any dwelling unit or sleeping unit is located three or more stories above the lowest level of exit discharge;
2. Any dwelling unit or sleeping unit is located more than one story below the highest level of exit discharge of exits serving the dwelling unit or sleeping unit; or

ACTING CITY CLERK

3. The building contains more than 16 dwelling units or sleeping units.

Exception((s)):

((~~1.~~)) A fire alarm system is not required in buildings not over two stories in height where all dwelling units or sleeping units and contiguous attic and crawl spaces are separated from each other and public or common areas by at least 1-hour fire partitions and each dwelling unit or sleeping unit has an exit directly to a public way, exit court or yard.

((~~2. Manual fire alarm boxes are not required throughout the building when the following conditions are met:~~

~~2.1. The building is equipped throughout with an automatic sprinkler system in accordance with Section 903.3.1.1 or 903.3.1.2.~~

~~2.2. The notification appliances will activate upon sprinkler flow, and~~

~~2.3. At least one manual fire alarm box is installed at an approved location.~~

~~3. A fire alarm system is not required in buildings that do not have interior corridors serving dwelling units and are protected by an approved automatic sprinkler system installed in accordance with Section 903.3.1.1 or 903.3.1.2, provided that dwelling units either have a means of egress door opening directly to an exterior exit access that leads directly to the exits or are served by open-ended corridors designed in accordance with Section 1022.6, Exception 4.~~))

907.2.9.1 Automatic Detection. Automatic heat detectors shall be provided in all unsprinklered areas not within dwelling units other than attics and crawl spaces.

[F] 907.2.10 Single- and multiple-station smoke alarms. Listed single- and multiple-station smoke alarms shall be installed in accordance with the provisions of this code and the household fire-warning equipment provisions of NFPA 72.

ACTING CITY CLERK

[F] 907.2.10.1 Where required. Single- or multiple-station smoke alarms shall be installed in the locations described in Sections 907.2.10.1.1 through 907.2.10.1.3.

[F] 907.2.10.1.1 Group R-1. Single- or multiple-station smoke alarms shall be installed in all of the following locations in Group R-1:

1. In sleeping areas.
2. In every room in the path of the means of egress from the sleeping area to the door leading from the sleeping unit.
3. In each story within the sleeping unit, including basements. For sleeping units with split levels and without an intervening door between the adjacent levels, a smoke alarm installed on the upper level shall suffice for the adjacent lower level provided that the lower level is less than one full story below the upper level.

[F] 907.2.10.1.2 Groups R-2, R-3, R-4 and I-1. Single- or multiple-station smoke alarms shall be installed and maintained in Groups R-2, R-3, R-4 and I-1, regardless of occupant load at all of the following locations:

1. On the ceiling or wall outside of each separate sleeping area in the immediate vicinity of bedrooms.
2. In each room used for sleeping purposes.
3. In each story within a dwelling unit, including basements but not including crawl spaces and uninhabitable attics. In dwellings or dwelling units with split levels and without an intervening door between the adjacent levels, a smoke alarm installed on the upper level shall suffice for the adjacent lower level provided that the lower level is less than one full story below the upper level.

ACTING CITY CLERK

[F] 907.2.10.1.3 Group I-1. Single- or multiple-station smoke alarms shall be installed and maintained in sleeping areas in occupancies in Group I-1. Single- or multiple-station smoke alarms shall not be required where the building is equipped throughout with an automatic fire detection system in accordance with Section 907.2.6.

[F] 907.2.10.2 Power source. In new construction, required smoke alarms shall receive their primary power from the building wiring where such wiring is served from a commercial source and shall be equipped with a battery backup. Smoke alarms shall emit a signal when the batteries are low. Wiring shall be permanent and without a disconnecting switch other than as required for overcurrent protection.

Exception: Smoke alarms are not required to be equipped with battery backup in Group R-1 where they are connected to an emergency electrical system.

[F] 907.2.10.3 Interconnection. Where more than one smoke alarm is required to be installed within an individual dwelling unit in Group R-2, R-3 or R-4, or within an individual dwelling unit or sleeping unit in Group R-1, the smoke alarms shall be interconnected in such a manner that the activation of one alarm will activate all of the alarms in the individual unit. The alarm shall be clearly audible in all bedrooms over background noise levels with all intervening doors closed.

[F] 907.2.10.4 Acceptance testing. When the installation of the alarm devices is complete, each detector and interconnecting wiring for multiple-station alarm devices shall be tested in accordance with the household fire warning equipment provisions of NFPA 72.

[F] 907.2.11 Special amusement buildings. An approved automatic smoke detection system shall be provided in special amusement buildings in accordance with this section.

Exception: In areas where ambient conditions will cause a smoke detection system to alarm, an approved alternative type of automatic detector shall be installed.

[F] 907.2.11.1 Alarm. Activation of any single smoke detector, the automatic sprinkler system or any other automatic fire detection device shall immediately sound an alarm at the building at a constantly attended location from which emergency action can be initiated, including the capability of manual initiation of requirements in Section 907.2.11.2.

[F] 907.2.11.2 System response. The activation of two or more smoke detectors, a single smoke detector with alarm verification, the automatic sprinkler system or other approved fire detection device shall automatically:

1. Cause illumination of the means of egress with light of not less than 1 foot-candle (11 lux) at the walking surface level;
2. Stop sounds and visual distractions; and
3. Activate an approved directional exit marking that will become apparent in an emergency. Such system response shall also include activation of a prerecorded message, clearly audible throughout the special amusement building, instructing patrons to proceed to the nearest exit. Alarm signals used in conjunction with the prerecorded message shall produce a sound which is distinctive from other sounds used during normal operation. The wiring to the auxiliary devices and equipment used to accomplish the above fire safety functions shall be monitored for integrity in accordance with NFPA 72.

[F] 907.2.11.3 Emergency voice/alarm communication system. An emergency voice/alarm communication system, which is also allowed to serve as a public address system, shall be installed in accordance with NFPA 72, and shall be audible throughout the entire special amusement building.

ACTING CITY CLERK

[F] 907.2.12 High-rise buildings. Buildings having floors used for human occupancy located more than 75 feet (22 860 mm) above the lowest level of fire department vehicle access shall be provided with an automatic fire alarm system and an emergency voice/alarm communication system in accordance with Section 907.2.12.2.

Exceptions:

1. Airport traffic control towers in accordance with Sections 412 and 907.2.22.
2. Open parking garages in accordance with Section 406.3.
3. Buildings with an occupancy in Group A-5.
4. Low-hazard special occupancies in accordance with Section 503.1.2.

((~~5. Buildings with an occupancy in Group H-1, H-2 or H-3 in accordance with Section 415.~~))

[F] 907.2.12.1 Automatic ((~~fire~~)) <u>smoke</u> detection. Smoke detectors shall be provided in accordance with this section. Smoke detectors shall be connected to an automatic fire alarm system. The activation of any detector required by this section shall operate the emergency voice/alarm communication system. Smoke detectors shall be located as follows:

1. In each ((~~mechanical equipment,~~)) electrical, transformer, telephone equipment or similar room which is not provided with sprinkler protection, elevator machine rooms and in elevator lobbies.
2. In the main return air and exhaust air plenum of each air-conditioning system having a capacity greater than 2,000 cubic feet per minute (cfm) (0.94 m^3/s). Such detectors shall be located in a serviceable area downstream of the last duct inlet.
3. At each connection to a vertical duct or riser serving two or more stories from a return air duct or plenum of an air-conditioning system. In Group R-1 and R-2

ACTING CITY CLERK

occupancies a listed smoke detector is allowed to be used in each return air riser carrying not more than 5,000 cfm (2.4 m^3/s) and serving not more than 10 air inlet openings.

4. Outside of smokeproof enclosures and pressurized stairways within 5 feet (1524 mm) of doors exiting into the stairway or pressurized stairways.

[F] 907.2.12.2 Emergency voice/alarm communication system. The operation of any automatic fire detector, sprinkler water-flow device or manual fire alarm box shall automatically sound an alert tone followed by voice instructions giving approved information and directions on a general or selective basis to ((~~the following terminal~~)) all areas on a minimum of the alarming floor, the floor above and the floor below in accordance with the *International Fire Code*. The system shall provide the capability for manual voice messages to be announced throughout the building, or selectively to each floor, and each required stairway.

((~~1. Elevator lobbies.~~

~~2. Corridors.~~

~~3. Rooms and tenant spaces exceeding 1,000 square feet (93 m^2) in area.~~

~~4. Dwelling units or sleeping units in Group R-2 occupancies.~~

~~5. Sleeping units in Group R-1 occupancies.~~

~~6. Areas of refuge as defined in Section 1002.~~))

Exception: In Group I-1 and I-2 occupancies, the alarm shall be permitted to sound in a constantly attended area and a general occupant notification shall be broadcast over the overhead page.

[F] 907.2.12.2.1 Manual override. A manual override for emergency voice communication shall be provided for all paging zones.

ACTING CITY CLERK

[F] 907.2.12.2.2 Live voice messages. The emergency voice/alarm communication system shall also have the capability to broadcast live voice messages through speakers located in ((~~elevators,~~)) exit stairways and throughout a selected floor or floors.

[F] 907.2.12.2.3 Standard. The emergency voice/alarm communication system shall be designed and installed in accordance with NFPA 72.

[F] 907.2.12.3 Fire department communication system. An approved two-way, fire department communication system designed and installed in accordance with NFPA 72 shall be provided for fire department use. It shall operate between a fire command center complying with Section 911 and elevators, elevator lobbies, emergency and standby power rooms, fire pump rooms, areas of refuge and inside enclosed exit stairways. The fire department communication device shall be provided at each floor level within the enclosed stairway. Eight portable handsets for the communication system shall be provided in the fire command center.

Exception: Fire department radio systems where approved by the fire department.

[F] 907.2.13 Atriums connecting more than two stories. A fire alarm system shall be installed in occupancies with an atrium that connects more than two stories. The system shall be activated in accordance with Section 907.6. Such occupancies in Group A, E or M shall be provided with an emergency voice/alarm communication system complying with the requirements of Section 907.2.12.2.

[F] 907.2.14 High-piled combustible storage areas. An automatic fire detection system shall be installed throughout high-piled combustible storage areas where required by the *International Fire Code*.

ACTING CITY CLERK

[F] 907.2.15 Delayed egress locks. Where delayed egress locks are installed on means of egress doors in accordance with Section 1008.1.8.6, an automatic smoke or heat detection system shall be installed as required by that section.

[F] 907.2.16 Aerosol storage uses. Aerosol storage rooms and general-purpose warehouses containing aerosols shall be provided with an approved manual fire alarm system where required by the *International Fire Code*.

[F] 907.2.17 Lumber, plywood and veneer mills. Lumber, plywood and veneer mills shall be provided with a manual fire alarm system.

[F] 907.2.18 Underground buildings with smoke exhaust system. Where a smoke exhaust system is installed in an underground building in accordance with this code, automatic fire detectors shall be provided in accordance with this section.

[F] 907.2.18.1 Smoke detectors. A minimum of one smoke detector listed for the intended purpose shall be installed in the following areas:

1. ((~~Mechanical equipment, e~~))Electrical, transformer, telephone equipment, elevator machine or similar rooms.
2. Elevator lobbies.
3. The main return and exhaust air plenum of each air-conditioning system serving more than one story and located in a serviceable area downstream of the last duct inlet.
4. Each connection to a vertical duct or riser serving two or more floors from return air ducts or plenums of heating, ventilating and air-conditioning systems, except that in Group R occupancies, a listed smoke detector is allowed to be used in each return air riser carrying not more than 5,000 cfm (2.4 m^3/s) and serving not more than 10 air inlet openings.

ACTING CITY CLERK

5. Outside of smokeproof enclosures and pressurized stairways within 5 feet (1524 mm) of doors exiting into the stairway or pressurized stairways.

[F] 907.2.18.2 Alarm required. Activation of the smoke exhaust system shall activate an audible alarm at a constantly attended location.

[F] 907.2.19 Underground buildings. Where the lowest level of a structure is more than 60 feet (18 288 mm) below the lowest level of exit discharge, the structure shall be equipped throughout with a manual fire alarm system, including an emergency voice/alarm communication system installed in accordance with Section 907.2.12.2.

[F] 907.2.19.1 Public address system. Where a fire alarm system is not required by Section 907.2, a public address system shall be provided that shall be capable of transmitting voice communications to the highest level of exit discharge serving the underground portions of the structure and all levels below.

[F] 907.2.20 Covered mall buildings. Covered mall buildings exceeding 50,000 square feet (4645 m^2) in total floor area shall be provided with an emergency voice/alarm communication system. An emergency voice/alarm communication system serving a mall, required or otherwise, shall be accessible to the fire department. The system shall be provided in accordance with Section 907.2.12.2.

[F] 907.2.21 Residential aircraft hangars. A minimum of one listed smoke alarm shall be installed within a residential aircraft hangar as defined in Section 412.3.1 and shall be interconnected into the residential smoke alarm or other sounding device to provide an alarm that will be audible in all sleeping areas of the dwelling.

[F] 907.2.22 Airport traffic control towers. An automatic fire detection system shall be provided in airport traffic control towers.

[F] 907.2.23 Battery rooms. An approved automatic smoke detection system shall be installed in areas containing stationary lead-acid battery systems having a liquid capacity of

more than 50 gallons (189.3 L). The detection system shall be supervised by an approved central, proprietary or remote station service or a local alarm that will sound an audible signal at a constantly attended location.

907.2.24 Group LC. Fire alarm systems shall be installed in Group LC occupancies that are three or more stories above grade plane or have more than 16 clients. The alarm system shall include manual pull stations at every exit from every level and smoke detectors throughout exit paths.

Section 75. Subsection 907.3 of the International Building Code, 2003 Edition, is amended as follows:

[F] 907.3 Manual fire alarm boxes. Manual fire alarm boxes shall be installed in accordance with Sections 907.3.1 through 907.3.5.

[F] 907.3.1 Location. Manual fire alarm boxes shall be located not more than 5 feet (1524 mm) from the entrance to each exit at every floor level. Additional manual fire alarm boxes shall be located so that travel distance to the nearest box does not exceed 200 feet (60 960 mm).

Exception: Manual fire alarm boxes ((~~shall not be required in Group E occupancies where the building is equipped throughout with an approved automatic sprinkler system, the notification appliances will activate on sprinkler water flow and manual activation is provided from a normally occupied location~~)) are not required on sprinklered floors of Group F, M, S and B occupancies, other than Group B laboratory facilities.

[F] 907.3.2 Height. The height of the manual fire alarm boxes shall be a minimum of 42 inches (1067 mm) and a maximum of 48 inches (1219 mm), measured vertically, from the floor level to the activating handle or lever of the box.

[F] 907.3.3 Color. Manual fire alarm boxes shall be red in color.

[F] 907.3.4 Signs. Where fire alarm systems are not monitored by a supervising station, an approved permanent sign that reads: WHEN ALARM SOUNDS—CALL FIRE DEPARTMENT shall be installed adjacent to each manual fire alarm box.

Exception: Where the manufacturer has permanently provided this information on the manual fire alarm box.

[F] 907.3.5 Protective covers. The building official is authorized to require the installation of listed manual fire alarm box protective covers to prevent malicious false alarms or provide the manual fire alarm box with protection from physical damage. The protective cover shall be transparent or red in color with a transparent face to permit visibility of the manual fire alarm box. Each cover shall include proper operating instructions. A protective cover that emits a local alarm signal shall not be installed unless approved.

Section 76. Subsections 907.5 and 907.6 of the International Building Code, 2003 Edition, are amended as follows:

[F] 907.5 Wiring. Wiring shall comply with the requirements of the ((~~ICC~~)) *Seattle Electrical Code* and NFPA 72. Wireless protection systems utilizing radio-frequency transmitting devices shall comply with the special requirements for supervision of low-power wireless systems in NFPA 72.

[F] 907.6 Activation. Where an alarm notification system is required by another section of this code, it shall be activated by:

1. ((~~A required automatic fire alarm system.~~)) Automatic heat and smoke detectors, other than duct detectors, and dwelling unit smoke alarms.
2. Sprinkler water-flow devices.
3. ((~~Required m~~))Manual fire alarm boxes.

ACTING CITY CLERK

4. Any other fire suppression system installed in the building, except for laboratory fume hood suppression systems.

Section 77. Subsections 907.8 and 907.9 of the International Building Code, 2003 Edition, are amended as follows:

[F] 907.8 Zones. Each floor shall be zoned separately and a zone shall not exceed 22,500 square feet (2090 m^2). The length of any zone shall not exceed 300 feet (91 440 mm) in any direction.

Exception: Automatic sprinkler system zones shall not exceed the area permitted by NFPA 13.

[F] 907.8.1 Annunciator panel. ((~~**Zoning indicator panel.** A zoning indicator panel and the associated controls shall be provided in an approved location.~~)) Annunciator panels shall be located inside the building at the main building entrance. The fire code official may approve exterior annunciator panels designed specifically for the that purpose. Graphic annunciators, when provided, shall be mounted to maintain the viewer's directional orientation. The visual zone indication shall lock in until the system is reset and shall not be canceled by the operation of an audible alarm-silencing switch.

Alarm panels and annunciators shall not be installed where they would obstruct exiting. The required exit width plus 12 inches shall be provided when the panel is located in a means of egress. Alarm panels shall not be installed in an exit enclosure providing the only means of egress from any space.

[F] 907.8.2 High-rise buildings. In buildings used for human occupancy that have floors located more than 75 feet (22 860 mm) above the lowest level of fire department vehicle access, a separate zone by floor shall be provided for all of the following types of alarm-initiating devices where provided:

ACTING CITY CLERK

1. Smoke detectors.
2. Sprinkler water-flow devices.
3. Manual fire alarm boxes.
4. Other approved types of automatic fire detection devices or suppression systems.

[F] 907.9 Alarm notification appliances. Alarm notification appliances shall be provided and shall be listed for their purpose.

[F] 907.9.1 Visible alarms. Visible alarm notification appliances shall be provided in accordance with Sections 907.9.1.1 through 907.9.1.3.

Exceptions:

1. Visible alarm notification appliances are not required in alterations, except where an existing fire alarm system is upgraded or replaced, or a new fire alarm system is installed.
2. Visible alarm notification appliances shall not be required in exits as defined in Section 1002.1.

[F] 907.9.1.1 Public and common areas. Visible alarm notification appliances shall be provided in public areas and common areas.

[F] 907.9.1.2 Employee work areas. Where employee work areas have audible alarm coverage, the wiring systems shall be designed so that visible alarm notification appliances can be integrated into the alarm system.

[F] 907.9.1.3 Groups I-1 and R-1. Group I-1 and R-1 sleeping units in accordance with Table 907.9.1.3 shall be provided with a visible alarm notification appliance, activated by both the in-room smoke alarm and the building fire alarm system.

[F] 907.9.1.4 Group R-2. In Group R-2 occupancies required by Section 907 to have a fire alarm system, all dwelling units and sleeping units shall be provided with the

ACTING CITY CLERK

capability to support visible alarm notification appliances in accordance with ICC A117.1.

[F] 907.9.2 Audible alarms. Audible alarm notification appliances shall be provided and shall sound a distinctive sound that is not to be used for any purpose other than that of a fire alarm. The audible alarm notification appliances shall provide a sound pressure level of 15 decibels (dBA) above the average ambient sound level or 5 dBA above the maximum sound level having a duration of at least 60 seconds, whichever is greater, in every occupied space within the building, or in the case of non-required partial fire alarm systems, throughout the space that is being provided with the fire alarm system. The minimum sound pressure levels shall be: 70 dBA in occupancies in Groups R and I-1; 90 dBA in mechanical equipment rooms and 60 dBA in other occupancies. The maximum sound pressure level for audible alarm notification appliances shall be 120 dBA at the minimum hearing distance from the audible appliance. Where the average ambient noise is greater than 105 dBA, visible alarm notification appliances shall be provided in accordance with NFPA 72 and audible alarm notification appliances shall not be required. In assembly facilities with high sound levels, such as nightclubs and bars, an interface shall be provided between the fire alarm system and noise source to reduce the noise level upon activation of the fire alarm system.

Exceptions:

1. Visible alarm notification appliances shall be allowed in lieu of audible alarm notification appliances in critical-care areas of Group I-2 occupancies.
2. Audibility is not required for fire detection systems monitored by an approved central station.

ACTING CITY CLERK

Section 78. Subsection 907.11 of the International Building Code, 2003 Edition, is amended as follows:

[F] 907.11 Duct smoke detectors. Duct smoke detectors shall be connected to the building's fire alarm control panel as a supervisory signal when a fire alarm system is provided. Duct detectors shall not activate a fire alarm signal. Activation of a duct smoke detector shall initiate a visible and audible supervisory signal at a constantly attended location. Duct smoke detectors shall not be used as a substitute for required open-area detection.

Exceptions:

1. The supervisory signal at a constantly attended location is not required where duct smoke detectors are monitored by a central station alarm service. ((~~activate the building's alarm notification appliances.~~))
2. In occupancies not required to be equipped with a fire alarm system, actuation of a smoke detector shall activate a visible and audible signal in an approved location. Smoke detector trouble conditions shall activate a visible or audible signal in an approved location and shall be identified as air duct detector trouble.

Section 79. Subsection 907.14 of the International Building Code, 2003 Edition, is amended as follows:

[F] 907.14 Monitoring. Where required by this chapter or the *International Fire Code*, an approved supervising station in accordance with NFPA 72 shall monitor fire alarm systems.

Exception: Supervisory service is not required for:

1. Single- and multiple-station smoke alarms required by Section 907.2.10.
2. Smoke detectors in Group I-3 occupancies.
3. Non-required ((~~A~~))automatic sprinkler systems in one- and two-family dwellings.

ACTING CITY CLERK

Section 80. Subsection 907.16 of the International Building Code, 2003 Edition, is amended as follows:

[F] 907.16 Acceptance tests. Upon completion of the installation of the fire alarm system and after the electrical inspector has approved the installation, alarm notification appliances and circuits, alarm-initiating devices and circuits, supervisory-signal initiating devices and circuits, signaling line circuits, and primary and secondary power supplies shall be tested in accordance with NFPA 72 and rules promulgated by the building official and fire code official.

Section 81. Subsection 909.2 of the International Building Code, 2003 Edition, is amended as follows:

909.2 General design requirements. Buildings, structures or parts thereof required by this code to have a smoke control system or systems shall have such systems designed in accordance with the applicable requirements of Section 909 and the generally accepted and well-established principles of engineering relevant to the design. The construction documents shall include sufficient information and detail to adequately describe the elements of the design necessary for the proper implementation of the smoke control systems. These documents shall be accompanied by sufficient information and analysis to demonstrate compliance with these provisions.

Code Alternate CA909: Smoke control systems complying with the following in lieu of Sections 909.6, 909.7, 909.8 and 909.18.6 may be approved for high-rise buildings.

1. Building Ventilation. Natural or mechanical ventilation for the removal of products of combustion shall be provided in every story and basement in accordance with either item 1.1, 1.2 or 1.3.

1.1. Manually operable windows or panels shall be distributed around the perimeter of the building at not more than 50-foot (15 240 mm) intervals, and shall be aligned

ACTING CITY CLERK

vertically. The operable area of the windows or panels shall not be less than 20 square feet per 50 linear feet of perimeter.

EXCEPTIONS:

1. In Group R, Division 1 hotel occupancies, each guest room or suite having an exterior wall may be provided with 2 square feet (.19 m^2) of venting area in lieu of the area specified above.
2. Windows may be of fixed tempered glass provided that no coating or film is applied which will modify the natural breaking characteristics of the glass. The windows shall be identified with a white dot 2 inches in diameter located in the bottom one-third of the window. The windows shall be aligned vertically.

1.2. The mechanical air-handling equipment may be designed to accomplish smoke removal in lieu of the requirements of Item 1.1 above. Under fire conditions, the return and exhaust air shall be moved directly to the outside without recirculation to other sections of the building. The air-handling system shall provide a minimum of one exhaust air change each 10 minutes for the area involved.

1.3. Any other approved design which will produce equivalent results.

2. Shaft Pressurization. Shafts shall be protected by a shaft pressurization system complying with following:

2.1. All elevator shafts shall be pressurized to 0.10 inch of water column. Enclosed stairways shall be pressurized to 0.15 inch of water column. Exit passageways connecting pressurized stairways to the exterior shall be pressurized to 0.15 inches of water column. Other vertical shafts may be required to be pressurized as determined by the building official at the predesign conference. The pressure difference shall be measured between the shaft and the main occupied area on

ACTING CITY CLERK

each floor.

EXCEPTION: Subject to the approval of the building official, pressurization may be omitted for elevators and enclosed stairways less than 75 feet (22 860 mm) in height.

2.2. Shaft pressurization shall be activated by a fire alarm system on each floor located in a manner approved by the building official and the fire chief. The fire alarm system shall include a smoke detector installed in elevator lobbies, and outside the enclosure within 5 feet (4572 mm) of stairway doors.

2.3. Areas separated by two-hour enclosure walls served by common ventilation equipment shall have automatic-closing dampers to prevent loss of pressurization.

2.4. Pressurization equipment and its duct work located within the building shall be separated from other portions of the building by a minimum of two-hour fire-resistive construction. Duct work shall be constructed of noncombustible materials conforming to the requirements of the Mechanical Code.

2.5. Air for stairway pressurization shall be supplied near the bottom of the shaft and at intervals sufficient to maintain the required pressure throughout the shaft.

Note: The performance goal for item 2.5 is compliance with minimum and maximum pressures at all levels of the shaft, and to ensure upward flow of air and smoke.

2.6 Shaft pressurization air intakes shall be located at the exterior of the building.

EXCEPTION: Intakes for elevator shaft pressurization may be located within the building provided they are located no more than 20 feet (6096 mm) from major openings in the building exterior such as loading docks and vehicular entrances. Such intake shall be provided with smoke detectors which shall deactivate the pressurization system for that shaft.

ACTING CITY CLERK

2.7. Whenever shaft pressurization is activated, all horizontal exit doors which have hold-open devices shall be automatically released to close.

2.8. Other measures to prevent loss of pressurization shall be provided in the design and construction of shafts, such as quality of workmanship and caulking of penetrations and joints.

2.9. Exit enclosures shall be equipped with a barometric dampered relief opening at the top, and a motorized damper as required by the Energy Code. The motorized damper shall be of the normally open type (open with the power off). The enclosure shall be supplied mechanically with sufficient air to discharge a minimum of 2,500 cubic feet per minute through the relief opening while maintaining a minimum positive pressure of 0.15-inch water column in the shaft relative to atmospheric pressure with all doors closed. Supply air ducts shall be enclosed in construction at least equivalent to that of the exit enclosure between the exterior of the building and the exit enclosure. Activation of the mechanical equipment shall be initiated by the building fire alarm system. Such equipment shall also be activated by actuation of the automatic sprinkler system.

Section 82. Subsection 909.11 of the International Building Code, 2003 Edition, is amended as follows:

909.11 Power systems. The smoke control system shall be supplied with two sources of power. Primary power shall be the normal building power systems. Secondary power shall be from an approved ((~~standby~~)) emergency power system ((~~source~~)) complying with the ((~~ICC~~)) *Seattle Electrical Code*. The ((~~standby~~)) emergency power source and its transfer switches shall be in a separate room from the normal power transformers and switch gear and shall be enclosed in a room constructed of not less than 1-hour fire-resistance-rated fire barriers

ACTING CITY CLERK

ventilated directly to and from the exterior. Power distribution from the two sources shall be by independent routes. Transfer to full ((~~standby~~)) emergency power shall be automatic and within 60 seconds of failure of the primary power. The systems shall comply with the ((~~ICC~~)) *Seattle Electrical Code*.

909.11.1 Power sources and power surges. Elements of the smoke management system relying on volatile memories or the like shall be supplied with uninterruptable power sources of sufficient duration to span a 15-minute primary power interruption. Elements of the smoke management system susceptible to power surges shall be suitably protected by conditioners, suppressors or other approved means.

Section 83. Subsection 909.12 of the International Building Code, 2003 Edition, is amended as follows:

909.12 Detection and control systems. Fire detection systems providing control input or output signals to mechanical smoke control systems or elements thereof shall comply with the requirements of Section 907. Such systems shall be equipped with a control unit complying with UL 864 and listed as smoke control equipment.

Control systems for mechanical smoke control systems shall include provisions for verification. Verification shall include positive confirmation of actuation, testing, manual override, the presence of power downstream of all disconnects and, through a preprogrammed weekly test sequence report, abnormal conditions audibly, visually and by printed report.

((~~**909.12.1 Wiring.** In addition to meeting requirements of the ICC *Electrical Code*, all wiring, regardless of voltage, shall be fully enclosed within continuous raceways.~~))

[F] 909.12.2 Activation. Smoke control systems shall be activated in accordance with this section.

ACTING CITY CLERK

[F] 909.12.2.1 Pressurization, airflow or exhaust method. Mechanical smoke control systems using the pressurization, airflow or exhaust method shall have completely automatic control.

[F] 909.12.2.2 Passive method. Passive smoke control systems actuated by approved spot-type detectors listed for releasing service shall be permitted.

[F] 909.12.3 Automatic control. Where completely automatic control is required or used, the automatic-control sequences shall be initiated from an appropriately zoned automatic sprinkler system complying with Section 903.3.1.1, manual controls that are readily accessible to the fire department and any smoke detectors required by engineering analysis.

Section 84. Subsection 909.16.3 of the International Building Code, 2003 Edition, is amended as follows:

[F] 909.16.3 Control action and priorities. The fire-fighter's control panel actions shall be as follows:

1. ON-OFF, OPEN-CLOSE control actions shall have the highest priority of any control point within the building. Once issued from the fire-fighter's control panel, no automatic or manual control from any other control point within the building shall contradict the control action. Where automatic means are provided to interrupt normal, nonemergency equipment operation or produce a specific result to safeguard the building or equipment (i.e., duct freezestats, duct smoke detectors, high-temperature cutouts, temperature-actuated linkage and similar devices), such means shall be capable of being overridden by the fire-fighter's control panel. The last control action as indicated by each fire-fighter's control panel switch position shall prevail. In no case shall control actions require the smoke control system to assume more than one configuration at any one time.

ACTING CITY CLERK

Exception: Power disconnects required by the ((~~ICC~~)) Seattle *Electrical Code.*

2. Only the AUTO position of each three-position fire-fighter's control panel switch shall allow automatic or manual control action from other control points within the building. The AUTO position shall be the NORMAL, nonemergency, building control position. Where a fire-fighter's control panel is in the AUTO position, the actual status of the device (on, off, open, closed) shall continue to be indicated by the status indicator described above. When directed by an automatic signal to assume an emergency condition, the NORMAL position shall become the emergency condition for that device or group of devices within the zone. In no case shall control actions require the smoke control system to assume more than one configuration at any one time.

Section 85. Subsection 909.20.6 of the International Building Code, 2003 Edition, is amended as follows:

909.20.6 Ventilating equipment. The activation of ventilating equipment required by the alternatives in Sections 909.20.4 and 909.20.5 shall be by smoke detectors installed at each floor level at an approved location at the entrance to the smokeproof enclosure. When the closing device for the stair shaft and vestibule doors is activated by smoke detection or power failure, the mechanical equipment shall activate and operate at the required performance levels. Smoke detectors shall be installed in accordance with Section 907.10.

909.20.6.1 Ventilation systems. Smokeproof enclosure ventilation systems shall be independent of other building ventilation systems. The equipment and ductwork shall comply with one of the following:

Acting City Clerk

1. Equipment and ductwork shall be located exterior to the building and directly connected to the smokeproof enclosure or connected to the smokeproof enclosure by ductwork enclosed by 2-hour fire-resistance-rated fire barriers.
2. Equipment and ductwork shall be located within the smokeproof enclosure with intake or exhaust directly from and to the outside or through ductwork enclosed by 2-hour fire-resistance-rated fire barriers.
3. Equipment and ductwork shall be located within the building if separated from the remainder of the building, including other mechanical equipment, by 2-hour fire-resistance-rated fire barriers.

909.20.6.2 ((~~Standby~~)) Emergency power. Mechanical vestibule and stair shaft ventilation systems and automatic fire detection systems shall be powered by an approved ((~~standby~~)) emergency power system conforming to Section ((~~403.10.1~~)) 403.11 and Chapter 27.

909.20.6.3 Acceptance and testing. Before the mechanical equipment is approved, the system shall be tested in the presence of the building official to confirm that the system is operating in compliance with these requirements.

Section 86. A new subsection 909.22 is added to the Seattle Building Code, 2003 Edition, to read as follows:

909.22. Pressurization for low-rise buildings. Where elevator or stairway shaft pressurization is provided in accordance with exception 5 to Section 707.14.1 or exception 4 of Section 1018.2, the pressurization system shall comply with the following:

1. Shafts shall be pressurized to 0.15 inch of water column relative to the main occupied area on each floor.

CITY CLERK

Exception: Elevator shafts in buildings that are protected throughout with an automatic sprinkler system may be pressurized to not less than 0.10 inch of water column.

Stairway pressurization shall be measured with all stairway doors closed. Elevator pressurization shall be measured with elevator cars at the designated recall level with the doors in the open position.

2 The shaft pressurization shall be activated by smoke detectors in the corridors located near the shaft on each floor as approved by the building official and the fire chief. If the building has a fire alarm panel, smoke detectors shall be connected to it, with power supplied by it.

3. Pressurization equipment and its duct work located within the building shall be separated from other portions of the building by construction equal to that required for the shaft.

4. Air intakes for shafts other than elevators shall be located at the exterior of the building. Intakes for elevator shaft pressurization may be located within the building provided they are located no more than 20 feet (6096 mm) from major openings in the building exterior such as loading docks and vehicular entrances. Such intake shall be provided with smoke detectors which shall deactivate the pressurization system for that shaft.

5. An emergency source of power shall be provided for the fire alarm system.

6. A standby source of power shall be provided for the pressurization system according to Seattle Electrical Code Section 701.11. A connection ahead of the service disconnecting means shall be permitted as the sole source of power to the pressurization system.

7. Other measures to prevent loss of pressurization shall be provided in the design and construction of shafts, such as quality of workmanship and caulking of penetrations and joints.

ACTING CITY CLERK

Section 87. Subsection 1002.1 of the International Building Code, 2003 Edition, is amended as follows:

1002.1 Definitions. The following words and terms shall, for the purposes of this chapter and as used elsewhere in this code, have the meanings shown herein.

ACCESSIBLE MEANS OF EGRESS. A continuous and unobstructed way of egress travel from any point in a building or facility that provides an accessible route to an area of refuge, a horizontal exit or a public way.

AISLE ACCESSWAY. That portion of an exit access that leads to an aisle.

ALTERNATING TREAD DEVICE. A device that has a series of steps between 50 and 70 degrees (0.87 and 1.22 rad) from horizontal, usually attached to a center support rail in an alternating manner so that the user does not have both feet on the same level at the same time.

AREA OF REFUGE. An area where persons unable to use stairways can remain temporarily to await instructions or assistance during emergency evacuation.

BLEACHERS. Tiered seating facilities.

COMMON PATH OF EGRESS TRAVEL. That portion of exit access which the occupants are required to traverse before two separate and distinct paths of egress travel to two exits are available. Paths that merge are common paths of travel. Common paths of egress travel shall be included within the permitted travel distance.

CORRIDOR. An enclosed exit access component that defines and provides a path of egress travel to an exit.

DOOR, BALANCED. A door equipped with double-pivoted hardware so designed as to cause a semicounterbalanced swing action when opening.

EGRESS COURT. A court or yard which provides access to a public way for one or more exits.

ACTING CITY CLERK

EMERGENCY ESCAPE AND RESCUE OPENING. An operable window, door or other similar device that provides for a means of escape and access for rescue in the event of an emergency.

EXIT. That portion of a means of egress system which is separated from other interior spaces of a building or structure by fire-resistance-rated construction and opening protectives as required to provide a protected path of egress travel between the exit access and the exit discharge. Exits include exterior exit doors at ground level, exit enclosures, exit passageways, exterior exit stairs, exterior exit ramps and horizontal exits.

EXIT, HORIZONTAL. A path of egress travel from one building to an area in another building on approximately the same level, or a path of egress travel through or around a wall or partition to an area on approximately the same level in the same building, which affords safety from fire and smoke from the area of incidence and areas communicating therewith.

EXIT ACCESS. That portion of a means of egress system that leads from any occupied portion of a building or structure to an exit.

EXIT DISCHARGE. That portion of a means of egress system between the termination of an exit and a public way.

EXIT DISCHARGE, LEVEL OF. The horizontal plane located at the point at which an exit terminates and an exit discharge begins.

EXIT ENCLOSURE. An exit component that is separated from other interior spaces of a building or structure by fire-resistance-rated construction and opening protectives, and provides for a protected path of egress travel in a vertical or horizontal direction to the exit discharge or the public way.

EXIT PASSAGEWAY. An exit component that is separated from all other interior spaces of a building or structure by fire-resistance-rated construction and opening protectives, and provides

ACTING CITY CLERK

for a protected path of egress travel in a horizontal direction to the exit discharge or the public way.

EXIT PLACARD. A non-illuminated sign or a sign painted on a wall indicating the direction of egress.

EXIT SIGN. An internally-illuminated sign indicating the direction of egress.

FIRE EXIT HARDWARE. Panic hardware that is listed for use on fire door assemblies.

FLOOR AREA, GROSS. The floor area within the inside perimeter of the exterior walls of the building under consideration, exclusive of vent shafts and courts, without deduction for corridors, stairways, closets, the thickness of interior walls, columns or other features. The floor area of a building, or portion thereof, not provided with surrounding exterior walls shall be the usable area under the horizontal projection of the roof or floor above. The gross floor area shall not include shafts with no openings or interior courts.

FLOOR AREA, NET. The actual occupied area not including unoccupied accessory areas such as corridors, stairways, toilet rooms, mechanical rooms and closets.

FOLDING AND TELESCOPIC SEATING. Tiered seating facilities having an overall shape and size that are capable of being reduced for purposes of moving or storing.

GRANDSTAND. Tiered seating facilities.

GUARD. A building component or a system of building components located at or near the open sides of elevated walking surfaces that minimizes the possibility of a fall from the walking surface to a lower level.

HANDRAIL. A horizontal or sloping rail intended for grasping by the hand for guidance or support.

MEANS OF EGRESS. A continuous and unobstructed path of vertical and horizontal egress travel from any occupied portion of a building or structure to a public way. A means of egress consists of three separate and distinct parts: the exit access, the exit and the exit discharge.

ACTING CITY CLERK

NOSING. The leading edge of treads of stairs and of landings at the top of stairway flights.

OCCUPANT LOAD. The number of persons for which the means of egress of a building or portion thereof is designed.

PANIC HARDWARE. A door-latching assembly incorporating a device that releases the latch upon the application of a force in the direction of egress travel.

PUBLIC WAY. A street, alley or other parcel of land open to the outside air leading to a street, that has been deeded, dedicated or otherwise permanently appropriated to the public for public use and which has a clear width and height of not less than 10 feet (3048 mm).

RAMP. A walking surface that has a running slope steeper than one unit vertical in 20 units horizontal (5-percent slope).

SCISSOR STAIR. Two interlocking stairways providing two separate paths of egress located within one stairwell enclosure.

SMOKE-PROTECTED ASSEMBLY SEATING. Seating served by means of egress that is not subject to smoke accumulation within or under a structure.

STAIR. A change in elevation, consisting of one or more risers.

STAIRWAY. One or more flights of stairs, either exterior or interior, with the necessary landings and platforms connecting them, to form a continuous and uninterrupted passage from one level to another.

STAIRWAY, EXTERIOR. A stairway that is open on at least one side, except for required structural columns, beams, handrails and guards. The adjoining open areas shall be either yards, courts or public ways. The other sides of the exterior stairway need not be open.

STAIRWAY, INTERIOR. A stairway not meeting the definition of an exterior stairway.

STAIRWAY, SPIRAL. A stairway having a closed circular form in its plan view with uniform section-shaped treads attached to and radiating from a minimum-diameter supporting column.

WINDER. A tread with nonparallel edges.

Section 88. Table 1004.1.2 of the International Building Code, 2003 Edition, is amended as follows:

TABLE 1004.1.2
MAXIMUM FLOOR AREA ALLOWANCES PER OCCUPANT

OCCUPANCY	FLOOR AREA IN SQ. FT. PER OCCUPANT
Agricultural building	300 gross
Aircraft hangars	500 gross
Airport terminal	
Baggage claim	20 gross
Baggage handling	300 gross
Concourse	100 gross
Waiting areas	15 gross
Assembly	
Gaming floors (keno, slots, etc.)	11 gross
Assembly with fixed seats	See Section 1004.7
Assembly without fixed seats	
Concentrated (chairs only—not fixed)	7 net
Standing space	5 net
Unconcentrated (tables and chairs)	15 net
Bowling centers, allow 5 persons for each lane including 15 feet of runway, and for additional areas	7 net
Business areas	
without sprinkler protection	100 gross
with sprinkler protection	130 gross
Commercial laboratories	100 gross
Courtrooms—other than fixed seating areas	40 net
Dormitories	50 gross
Educational	
Classroom area	20 net
Shops, laboratories and other vocational room areas	50 net
Exercise rooms	50 gross
H-5 Fabrication and manufacturing areas	200 gross
Industrial areas	100 gross
Institutional areas	
Inpatient treatment areas	240 gross
Outpatient areas	100 gross
Sleeping areas	120 gross

Kitchens, commercial	200 gross
Library Reading rooms Stack area	 50 net 100 gross
Locker rooms	50 gross
Mercantile Areas on other floors Basement and grade floor areas Storage, stock, shipping areas	 60 gross 30 gross 300 gross
Parking garages	200 gross
Residential	200 gross
Skating rinks, swimming pools Rink and pool Decks	 50 gross 15 gross
Stages and platforms	15 net
Accessory storage areas, mechanical equipment room[1]	300 gross
Warehouses	500 gross

For SI:1 square foot = 0.0929 m^2.

1. For electrical equipment areas, see also Sections 110-26 and 110-33 of the *Seattle Electrical Code.*

Section 89. Section 1006 of the International Building Code, 2003 Edition, is amended as follows:

1006.1 Illumination required. The means of egress, including the exit discharge, shall be illuminated at all times the building space served by the means of egress is occupied.

Exceptions:

1. Occupancies in Group U.
2. Aisle accessways in Group A.
3. Dwelling units and sleeping units in Groups R-1, R-2 and R-3.
4. Sleeping units of Group I occupancies.

1006.2 Illumination locations ((~~level~~)). Illumination shall be provided at every point in ((~~T~~))the means of egress. ((~~illumination level shall not be less than 1 foot-candle (11 lux) at the~~

ACTING CITY CLERK

~~floor level~~)) Luminaires shall be installed whenever exit signs are required as specified in Section 1011.

Exception: For auditoriums, theaters, concert or opera halls and similar assembly occupancies, the illumination at the floor level is permitted to be reduced during performances to not less than 0.2 foot-candle (2.15 lux) provided that the required illumination is automatically restored upon activation of a premise's fire alarm system where such system is provided.

Code Alternate CA1006.2: Compliance with the following paragraphs will be deemed to satisfy the requirement for means of egress illumination at every point in the means of egress. Means of egress illumination systems that comply with this Code Alternate shall also comply with Sections 1006.3 and 1006.4.

1. **Location and Fixture Placement**. Means of egress illumination shall be located in stairways, corridors, halls, passenger elevator cars, lobbies, rooms with an occupant load of 100 or more, and other areas required to provide safe egress from the premises and immediately outside of the building exit when required by the building official. Fixtures shall be installed to not less than the following schedule:

1.1 Interior and exterior stairways and landings and outside building exit	At least one per landing
1.2 Corridors and halls and designated means of egress paths in parking garages	At least one for each 40 lineal feet
1.3 Lobbies, vestibules, foyers, elevator cars and other similar areas as required	At least one for each 250 sq. ft.
1.4 Warehouses	See Item 2 below.

These fixtures may be included in the watts per square foot calculation for means of egress

ACTING CITY CLERK

illumination.

2. **Amount of Illumination**. Where means of egress illumination is required, illumination shall be provided at the rate of 0.1 watt of fluorescent illumination per square foot of area. Installations using incandescent lamps shall have a minimum wattage of at least 3 times the fluorescent requirements. Use of other light sources shall be subject to the approval of the building official.

EXCEPTIONS:

1. In warehouses, the allowable minimum illumination may be 0.1 watt per square foot (0.03 watts for fluorescent) provided fixtures are placed either:
   - 1.1 Where means of egress pathways are not designated, fixtures shall be placed to cover an area not larger than 1,600 square feet, or
   - 1.2 Where means of egress pathways are designated, fixtures shall be placed at least one for every 40 lineal feet.
2. In theaters, auditoriums or other places of assembly where motion pictures or other projections are made by means of directed light, the minimum allowable illumination may be reduced to 0.05 watts per square foot of floor area (0.02 watts for fluorescent). The higher level of required illumination shall be automatically restored upon activation of a premise's fire alarm system where such system is provided.
3. In Groups B, F-1, M and S-1 Occupancies, when approved by the building official, the minimum allowable illumination may be reduced to 0.05 watts per square foot (0.02 watts for fluorescent) of floor area.
4. In Group B Occupancies and open parking garages, when approved by the building official, the illumination may be eliminated when within 50 feet of a window wall or open side and where light is not totally obscured.

ACTING CITY CLERK

Means of egress illumination fixtures shall be spaced and designed to give adequate distribution of light for safe egress and so that the failure of any individual lighting element, such as the burning out of a light bulb, will not leave any space in total darkness. Illumination from battery operated fixtures shall provide the same level of illumination required for hard-wired fixtures.

1006.3 ((~~Illumination emergency power.~~)) Power supply. The power supply for means of egress illumination shall normally be provided by the premise's electrical supply.

In the event of power supply failure, an emergency electrical system shall automatically illuminate the following areas:

1. Exit access corridors, passageways and aisles in rooms and spaces which require two or more means of egress.
2. Exit access corridors and exit stairways located in buildings required to have two or more exits.
3. Exterior egress components at other than the level of exit discharge until exit discharge is accomplished for buildings required to have two or more exits.
4. Interior exit discharge elements, as permitted in Section 1023.1, in buildings required to have two or more exits.
5. The portion of the exterior exit discharge immediately adjacent to exit discharge doorways in buildings required to have two or more exits.

The emergency power system shall provide power for a duration of not less than 90 minutes and shall consist of storage batteries, unit equipment or an on-site generator. The installation of the emergency power system shall be in accordance with Section 2702.

1006.4 ((~~Performance of system~~)) Illumination levels.

1006.4.1 Normal power. When under normal power, the illumination level shall be not less than one foot candle at floor level at every point in the means of egress.

ACTING CITY CLERK

1006.4.2 Emergency power. Emergency lighting facilities shall be arranged to provide initial illumination that is at least an average of 1 foot-candle (11 lux) and a minimum at any point of 0.1 foot-candle (1 lux) measured along the path of egress at floor level. Illumination levels shall be permitted to decline to 0.6 foot-candle (6 lux) average and a minimum at any point of 0.06 foot-candle (0.6 lux) at the end of the emergency lighting time duration. A maximum-to-minimum illumination uniformity ratio of 40 to 1 shall not be exceeded.

Section 90. Subsection 1008.1 of the International Building Code, 2003 Edition, is amended as follows:

1008.1 Doors. Means of egress doors shall meet the requirements of this section. Doors serving a means of egress system shall meet the requirements of this section and Section 1017.2. Doors provided for egress purposes in numbers greater than required by this code shall meet the requirements of this section. See Section 3201 for doors swinging over public property.

Means of egress doors shall be readily distinguishable from the adjacent construction and finishes such that the doors are easily recognizable as doors. Mirrors or similar reflecting materials shall not be used on means of egress doors. Means of egress doors shall not be concealed by curtains, drapes, decorations or similar materials.

1008.1.1 Size of doors. The minimum width of each door opening shall be sufficient for the occupant load thereof and shall provide a clear width of not less than 32 inches (813 mm). Clear openings of doorways with swinging doors shall be measured between the face of the door and the stop, with the door open 90 degrees (1.57 rad). Where this section requires a minimum clear width of 32 inches (813 mm) and a door opening includes two door leaves without a mullion, one leaf shall provide a clear opening width of 32 inches (813 mm). The maximum width of a swinging door leaf shall be 48 inches (1219 mm)

CITY CLERK

nominal. Means of egress doors in an occupancy in Group I-2 used for the movement of beds shall provide a clear width not less than $41^1/_2$ inches (1054 mm). The height of doors shall not be less than 80 inches (2032 mm).

Exceptions:

1. The minimum and maximum width shall not apply to door openings that are not part of the required means of egress in occupancies in Groups R-2 and R-3 as applicable in Section 101.2.
2. Door openings to resident sleeping units in occupancies in Group I-3 shall have a clear width of not less than 28 inches (711 mm).
3. Door openings to storage closets less than 10 square feet (0.93 m^2) in area shall not be limited by the minimum width.
4. Width of door leafs in revolving doors that comply with Section 1008.1.3.1 shall not be limited.
5. Door openings within a dwelling unit or sleeping unit shall not be less than 78 inches (1981 mm) in height.
6. Exterior door openings in dwelling units and sleeping units, other than the required exit door, shall not be less than 76 inches (1930 mm) in height.
7. Interior egress doors within a dwelling unit or sleeping unit which is not required to be adaptable or accessible.
8. Door openings required to be accessible within Type B dwelling units shall have a minimum clear width of $31^3/_4$ inches (806 mm).

1008.1.1.1 Projections into clear width. There shall not be projections into the required clear width lower than 34 inches (864 mm) above the floor or ground. Projections into the clear opening width between 34 inches (864 mm) and 80 inches (2032 mm) above the floor or ground shall not exceed 4 inches (102 mm).

ARLINGTON CITY CLERK

1008.1.2 Door swing. Egress doors shall be side-hinged or pivoted swinging.

Exceptions:

1. Private garages, office areas, factory and storage areas with an occupant load of 10 or less.
2. Group I-3 occupancies used as a place of detention.
3. Doors within or serving a single dwelling unit in Groups R-2 and R-3 as applicable in Section 101.2.
4. In other than Group H occupancies, revolving doors complying with Section 1008.1.3.1.
5. In other than Group H occupancies, horizontal sliding doors complying with Section 1008.1.3.3 are permitted in a means of egress.
6. Power-operated doors in accordance with Section 1008.1.3.2.
7. In other than H occupancies, manually-operated horizontal sliding doors are permitted in a means of egress from occupied spaces with an occupant load of 10 or less.

Doors shall swing in the direction of egress travel where serving an occupant load of 50 or more persons or a Group H occupancy.

[W] The opening force for interior side-swinging doors without closers shall not exceed a 5-pound (22 N) force. For other side-swinging, sliding and folding doors, the door latch shall release when subjected to a 15-pound (67 N) force. The door shall be set in motion when subjected to a 30-pound (133 N) force. The door shall swing to a full-open position when subjected to a 15-pound (67 N) force. Forces shall be applied to the latch side. Within an accessible route, at exterior doors where environmental conditions require a closing pressure greater than 8.5 pounds, power operated doors shall be used within the accessible route of travel.

ACTING CITY CLERK

1008.1.3 Special doors. Special doors and security grilles shall comply with the requirements of Sections 1008.1.3.1 through 1008.1.3.5.

1008.1.3.1 Revolving doors. Revolving doors shall comply with the following:

1. Each revolving door shall be capable of collapsing into a bookfold position with parallel egress paths providing an aggregate width of 36 inches (914 mm).
2. A revolving door shall not be located within 10 feet (3048 mm) of the foot of or top of stairs or escalators. A dispersal area shall be provided between the stairs or escalators and the revolving doors.
3. The revolutions per minute (rpm) for a revolving door shall not exceed those shown in Table 1008.1.3.1.
4. Each revolving door shall have a side-hinged swinging door which complies with Section 1008.1 in the same wall and within 10 feet (3048 mm) of the revolving door.

1008.1.3.1.1 Egress component. A revolving door used as a component of a means of egress shall comply with Section 1008.1.3.1 and the following three conditions:

1. Revolving doors shall not be given credit for more than 50 percent of the required egress capacity.
2. Each revolving door shall be credited with no more than a 50-person capacity.
3. Each revolving door shall be capable of being collapsed when a force of not more than 130 pounds (578 N) is applied within 3 inches (76 mm) of the outer edge of a wing.

1008.1.3.1.2 Other than egress component. A revolving door used as other than a component of a means of egress shall comply with Section 1008.1.3.1. The

ACTING CITY CLERK

collapsing force of a revolving door not used as a component of a means of egress shall not be more than 180 pounds (801 N).

Exception: A collapsing force in excess of 180 pounds (801 N) is permitted if the collapsing force is reduced to not more than 130 pounds (578 N) when at least one of the following conditions is satisfied:

1. There is a power failure or power is removed to the device holding the door wings in position.
2. There is an actuation of the automatic sprinkler system where such system is provided.
3. There is an actuation of a smoke detection system which is installed in accordance with Section 907 to provide coverage in areas within the building which are within 75 feet (22 860 mm) of the revolving doors.
4. There is an actuation of a manual control switch, in an approved location and clearly defined, which reduces the holding force to below the 130-pound (578 N) force level.

1008.1.3.2 Power-operated doors. Where means of egress doors are operated by power, such as doors with a photoelectric-actuated mechanism to open the door upon the approach of a person, or doors with power-assisted manual operation, the design shall be such that in the event of power failure, the door is capable of being opened manually to permit means of egress travel or closed where necessary to safeguard means of egress. The forces required to open these doors manually shall not exceed those specified in Section 1008.1.2, except that the force to set the door in motion shall not exceed 50 pounds (220 N). The door shall be capable of swinging from any position to the full width of the opening in which such door is installed when a force is applied to the door on the side from which egress is made. Full-power-operated doors shall

ACTING CITY CLERK

comply with BHMA A156.10. Power-assisted and low-energy doors shall comply with BHMA A156.19.

Exceptions:

1. Occupancies in Group I-3.
2. Horizontal sliding doors complying with Section 1008.1.3.3.
3. For a biparting door in the emergency breakout mode, a door leaf located within a multiple-leaf opening shall be exempt from the minimum 32-inch (813 mm) single-leaf requirement of Section 1008.1.1, provided a minimum 32-inch (813 mm) clear opening is provided when the two biparting leaves meeting in the center are broken out.

1008.1.3.3 Horizontal sliding doors. In other than Group H occupancies, horizontal sliding doors permitted to be a component of a means of egress in accordance with Exception 5 to Section 1008.1.2 shall comply with all of the following criteria:

1. The doors shall be power operated and shall be capable of being operated manually in the event of power failure.
2. The doors shall be openable by a simple method from both sides without special knowledge or effort.
3. The force required to operate the door shall not exceed 30 pounds (133 N) to set the door in motion and 15 pounds (67 N) to close the door or open it to the minimum required width.
4. The door shall be openable with a force not to exceed 15 pounds (67 N) when a force of 250 pounds (1100 N) is applied perpendicular to the door adjacent to the operating device.

ACTING CITY CLERK

5. The door assembly shall comply with the applicable fire protection rating and, where rated, shall be self-closing or automatic-closing by smoke detection, shall be installed in accordance with NFPA 80 and shall comply with Section 715.
6. The door assembly shall have an integrated standby power supply.
7. The door assembly power supply shall be electrically supervised.
8. The door shall open to the minimum required width within 10 seconds after activation of the operating device.

1008.1.3.4 Access-controlled egress doors. The entrance doors in a means of egress in buildings with an occupancy in Group A, B, E, M, R-1 or R-2 and entrance doors to tenant spaces in occupancies in Groups A, B, E, M, R-1 and R-2 are permitted to be equipped with an approved entrance and egress access control system which shall be installed in accordance with all of the following criteria:

1. A sensor shall be provided on the egress side arranged to detect an occupant approaching the doors. The doors shall be arranged to unlock by a signal from or loss of power to the sensor.
2. Loss of power to that part of the access control system which locks the doors shall automatically unlock the doors.
3. The doors shall be arranged to unlock from a manual unlocking device located 40 inches to 48 inches (1016 mm to 1219 mm) vertically above the floor and within 5 feet (1524 mm) of the secured doors. Ready access shall be provided to the manual unlocking device and the device shall be clearly identified by a sign that reads "PUSH TO EXIT." When operated, the manual unlocking device shall result in direct interruption of power to the lock—independent of the access control system electronics—and the doors shall remain unlocked for a minimum of 30 seconds.

ACTING CITY CLERK

4. Activation of the building fire alarm system, if provided, shall automatically unlock the doors, and the doors shall remain unlocked until the fire alarm system has been reset.
5. Activation of the building automatic sprinkler or fire detection system, if provided, shall automatically unlock the doors. The doors shall remain unlocked until the fire alarm system has been reset.
6. Entrance doors in buildings with an occupancy in Group A, B, E or M shall not be secured from the egress side during periods that the building is open to the general public.
7. The access control system shall be listed or shall be comprised of approved components.

Note: Components bearing a "recognized component" mark from an approved agency shall be approved.

1008.1.3.5 Security grilles. In Groups B, F, M and S, horizontal sliding or vertical security grilles are permitted at the main exit and shall be openable from the inside without the use of a key or special knowledge or effort during periods that the space is occupied. The grilles shall remain secured in the full-open position during the period of occupancy by the general public. Where two or more means of egress are required, not more than one-half of the exits or exit access doorways shall be equipped with horizontal sliding or vertical security grilles.

1008.1.4 Floor elevation. There shall be a floor or landing on each side of a door. Such floor or landing shall be at the same elevation on each side of the door. Landings shall be level except for exterior landings, which are permitted to have a slope not to exceed 0.25 unit vertical in 12 units horizontal (2-percent slope).

Exceptions:

ACTING CITY CLERK

1. Doors serving individual dwelling units in Groups R-2 and R-3 as applicable in Section 101.2 where the following apply:
    1.1. A door is permitted to open at the top step of a((~~n interior~~)) flight of stairs, provided the door does not swing over the top step.
    1.2. Screen doors and storm doors are permitted to swing over stairs or landings.
2. Exterior doors as provided for in Section 1003.5, Exception 1, and Section 1017.2, which are not on an accessible route.
3. In Group R-3 occupancies, the landing at an exterior doorway shall not be more than $7^3/_4$ inches (197 mm) below the top of the threshold, provided the door, other than an exterior storm or screen door, does not swing over the landing.
4. Variations in elevation due to differences in finish materials, but not more than 0.5 inch (12.7 mm).
5. Exterior decks, patios or balconies that are part of Type B dwelling units and have impervious surfaces, and that are not more than 4 inches (102 mm) below the finished floor level of the adjacent interior space of the dwelling unit.

1008.1.5 Landings at doors. Landings shall have a width not less than the width of the stairway or the door, whichever is the greater. Doors in the fully open position shall not reduce a required dimension by more than 7 inches (178 mm). When a landing serves an occupant load of 50 or more, doors in any position shall not reduce the landing to less than one-half its required width. <u>When doors open over landings, doors in any position shall not reduce the landing length to less than 12 inches (305 mm).</u> Landings shall have a length measured in the direction of travel of not less than 44 inches (1118 mm).

ACTING CITY CLERK

Exception: Landing length in the direction of travel in Group R-3 as applicable in Section 101.2 and Group U and within individual units of Group R-2 as applicable in Section 101.2, need not exceed 36 inches (914 mm).

Interpretation I1008.1.5: Landing length, width and slope shall be measured as specified in Section 1009.4 and 1009.5.1. See Figures 1008.1.5(1), 1008.1.5(2) and 1008.1.5(3) for illustrations of the requirements of this section.

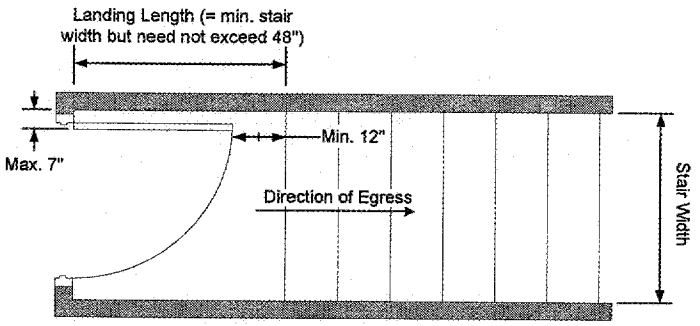

Figure 1008.1.5(1)
(Landing Dimensions Only)

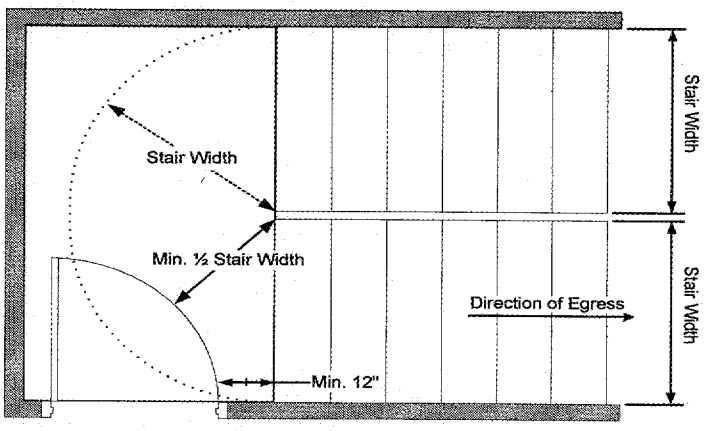

Figure 1008.1.5(2)
(Landing Dimensions Only)

ACTING CITY CLERK

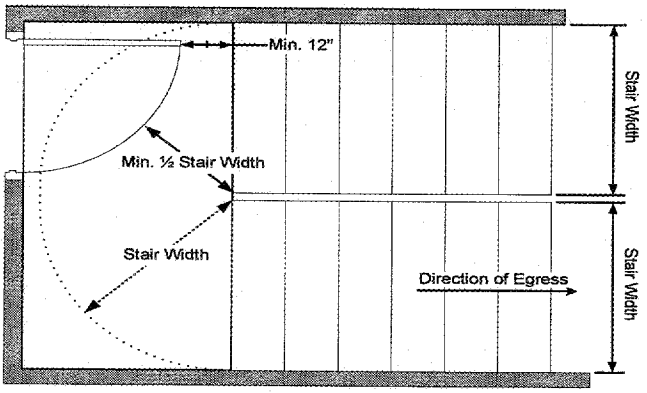

Figure 1008.1.5(3)
(Landing Dimensions Only)

ACTING CITY CLERK

1008.1.6 Thresholds. Thresholds at doorways shall not exceed 0.75 inch (19.1 mm) in height for sliding doors serving dwelling units or 0.5 inch (12.7 mm) for other doors. Raised thresholds and floor level changes greater than 0.25 inch (6.4 mm) at doorways shall be beveled with a slope not greater than one unit vertical in two units horizontal (50-percent slope).

Exception: The threshold height shall be limited to 7 $^{3}/_{4}$ inches (197 mm) where the occupancy is Group R-2 or R-3 as applicable in Section 101.2, the door is an exterior door that is not a component of the required means of egress and the doorway is not on an accessible route.

1008.1.7 Door arrangement. Space between two doors in series shall be 48 inches (1219 mm) minimum plus the width of a door swinging into the space. Doors in series shall swing either in the same direction or away from the space between doors.

Exceptions:

1. The minimum distance between horizontal sliding power-operated doors in a series shall be 48 inches (1219 mm).
2. Storm and screen doors serving individual dwelling units in Groups R-2 and R-3 as applicable in Section 101.2 need not be spaced 48 inches (1219 mm) from the other door.
3. Doors within individual dwelling units in Groups R-2 and R-3 as applicable in Section 101.2 other than within Type A dwelling units.

1008.1.8 Door operations. Except as specifically permitted by this section egress doors shall be readily openable from the egress side without the use of a key or special knowledge or effort.

1008.1.8.1 Hardware. Door handles, pulls, latches, locks and other operating devices on doors required to be accessible by Chapter 11 shall not require tight grasping, tight pinching or twisting of the wrist to operate.

1008.1.8.2 Hardware height. Door handles, pulls, latches, locks and other operating devices shall be installed 34 inches (864 mm) minimum and 48 inches (1219 mm) maximum above the finished floor. Locks used only for security purposes and not used for normal operation are permitted at any height.

1008.1.8.3 Locks and latches. Locks and latches shall be permitted to prevent operation of doors where any of the following exists:

1. Places of detention or restraint as approved by the building official.
2. In buildings in occupancy Group A having an occupant load of 300 or less, Groups B, F, M and S, and in churches, the main exterior door or doors are permitted to be equipped with key-operated locking devices from the egress side provided:
    - 2.1. The locking device is readily distinguishable as locked,
    - 2.2. A readily visible durable sign is posted on the egress side on or adjacent to the door stating: THIS DOOR TO REMAIN UNLOCKED ((~~WHEN BUILDING IS OCCUPIED~~)) DURING BUSINESS HOURS. The sign shall be in letters 1 inch (25 mm) high on a contrasting background,
    - 2.3. The use of the key-operated locking device is revokable by the building official for due cause.
3. Where egress doors are used in pairs, approved automatic flush bolts shall be permitted to be used, provided that the door leaf having the automatic flush

bolts has no doorknob or surface-mounted hardware on the egress side of the door.

4. Doors from individual dwelling or sleeping units of Group R occupancies having an occupant load of 10 or less are permitted to be equipped with a night latch, dead bolt or security chain, provided such devices are openable from the inside without the use of a key or tool.

1008.1.8.4 Bolt locks. Manually operated flush bolts or surface bolts are not permitted on required means of egress doors.

Exceptions:

1. On doors not required for egress in individual dwelling units or sleeping units.
2. Where a pair of doors serves a storage or equipment room, manually operated edge- or surface-mounted bolts or self-latching flush bolts are permitted on the inactive leaf.

1008.1.8.5 Unlatching. The unlatching of any leaf shall not require more than one operation.

Exception: More than one operation is permitted for unlatching doors in the following locations:

1. Places of detention or restraint.
2. Where manually operated bolt locks are permitted by Section 1008.1.8.4.
3. Doors with automatic flush bolts as permitted by Section 1008.1.8.3, Exception 3.
4. Doors from individual dwelling units and guestrooms of Group R occupancies as permitted by Section 1008.1.8.3, Exception 4.

CITY CLERK

1008.1.8.6 Delayed egress locks. Approved, listed, delayed egress locks shall be permitted to be installed on doors serving any occupancy except Group A, E and H occupancies in buildings that are equipped throughout with an automatic sprinkler system in accordance with Section 903.3.1.1 or an approved automatic smoke or heat detection system installed in accordance with Section 907, provided that the doors unlock in accordance with Items 1 through 6 below. Delayed egress locks are permitted in libraries in both Group A and E occupancies in locations other than at main exit doors, and in Group E day care occupancies. A building occupant shall not be required to pass through more than one door equipped with a delayed egress lock before entering an exit.

1. The doors unlock upon actuation of the automatic sprinkler system or automatic fire detection system.
2. The doors unlock upon loss of power controlling the lock or lock mechanism.
3. The door locks shall have the capability of being unlocked by a signal from the fire command center.
4. The initiation of an irreversible process which will release the latch in not more than 15 seconds when a force of not more than 15 pounds (67 N) is applied for 1 second to the release device. Initiation of the irreversible process shall activate an audible signal in the vicinity of the door. Once the door lock has been released by the application of force to the releasing device, relocking shall be by manual means only.

   Exception: Where approved, a delay of not more than 30 seconds is permitted.

5. A sign shall be provided on the door located above and within 12 inches (305 mm) of the release device reading: PUSH UNTIL ALARM SOUNDS. DOOR CAN BE OPENED IN 15 [30] SECONDS.
6. Emergency lighting shall be provided at the door.

1008.1.8.7 Stairway doors. Interior stairway means of egress doors shall be openable from both sides without the use of a key or special knowledge or effort.

Exceptions:

1. Stairway discharge doors shall be openable from the egress side and shall only be locked from the opposite side.
2. This section shall not apply to doors arranged in accordance with Section 403.12.
3. In stairways serving not more than four stories, doors are permitted to be locked from the side opposite the egress side, provided they are openable from the egress side.

1008.1.9 Panic and fire exit hardware. Where panic and fire exit hardware is installed, it shall comply with the following:

1. The actuating portion of the releasing device shall extend at least one-half of the door leaf width.
2. A maximum unlatching force of 15 pounds (67 N).

Each door in a means of egress from an occupancy of Group A or E having an occupant load of 100 or more and any occupancy of Group H-1, H-2, H-3 or H-5 shall not be provided with a latch or lock unless it is panic hardware or fire exit hardware.

If balanced doors are used and panic hardware is required, the panic hardware shall be the push-pad type and the pad shall not extend more than one-half the width of the door measured from the latch side.

ACTING CITY CLERK

Section 91. Subsection 1009.1 of the International Building Code, 2003 Edition, is amended as follows:

1009.1 Stairway width. The width of stairways shall be determined as specified in Section 1005.1, but such width shall not be less than 44 inches (1118 mm). See Section 1007.3 for accessible means of egress stairways.

Exceptions:

1. Stairways serving an occupant load of 50 or less shall have a width of not less than 36 inches (914 mm).
2. Spiral stairways as provided for in Section 1009.9.
3. Aisle stairs complying with Section 1024.
4. Where a stairway lift is installed on stairways serving occupancies in Group R-3, or within dwelling units in occupancies in Group R-2, both as applicable in Section 101.2, a clear passage width not less than 20 inches (508 mm) shall be provided. If the seat and platform can be folded when not in use, the distance shall be measured from the folded position.
5. <u>Stairways that are neither part of a required means of egress nor an accessible means of egress.</u>

Section 92. Subsection 1009.3 of the International Building Code, 2003 Edition, is amended as follows:

1009.3 Stair treads and risers. Stair riser heights shall be 7 inches (178 mm) maximum and 4 inches (102 mm) minimum. Stair tread depths shall be 11 inches (279 mm) minimum. The riser height shall be measured vertically between the leading edges of adjacent treads. The greatest riser height within any flight of stairs shall not exceed the smallest by more than 0.375

ACTING CITY CLERK

inch (9.5 mm). The tread depth shall be measured horizontally between the vertical planes of the foremost projection of adjacent treads and at right angle to the tread's leading edge. The greatest tread depth within any flight of stairs shall not exceed the smallest by more than 0.375 inch (9.5 mm). Winder treads shall have a minimum tread depth of 11 inches (279 mm) measured at a right angle to the tread's leading edge at a point 12 inches (305 mm) from the side where the treads are narrower and a minimum tread depth of 10 inches (254 mm). The greatest winder tread depth at the 12-inch (305 mm) walk line within any flight of stairs shall not exceed the smallest by more than 0.375 inch (9.5 mm).

Exceptions:

1. Circular stairways in accordance with Section 1009.7.
2. Winders in accordance with Section 1009.8.
3. Spiral stairways in accordance with Section 1009.9.
4. Aisle stairs in assembly seating areas where the stair pitch or slope is set, for sightline reasons, by the slope of the adjacent seating area in accordance with Section 1024.11.2.
5. In occupancies in Group R-3, as applicable in Section 101.2, within dwelling units in occupancies in Group R-2, as applicable in Section 101.2, and in occupancies in Group U, which are accessory to an occupancy in Group R-3, as applicable in Section 101.2, the maximum riser height shall be 7.75 inches (197 mm) and the minimum tread depth shall be 10 inches (254 mm), the minimum winder tread depth at the walk line shall be 10 inches (254 mm), and the minimum winder tread depth shall be 6 inches (152 mm). A nosing not less than 0.75 inch (19.1 mm) but not more than 1.25 inches (32 mm) shall be provided on stairways with solid risers where the tread depth is less than 11 inches (279 mm).

ACTING CITY CLERK

((~~6. See the *International Existing Building Code* for the replacement of existing stairways.~~))

1009.3.1 Dimensional uniformity. Stair treads and risers shall be of uniform size and shape. The tolerance between the largest and smallest riser or between the largest and smallest tread shall not exceed 0.375 inch (9.5 mm) in any flight of stairs.

Exceptions:

1. Nonuniform riser dimensions of aisle stairs complying with Section 1024.11.2.
2. Consistently shaped winders, complying with Section 1009.8, differing from rectangular treads in the same stairway flight.

Where the bottom or top riser adjoins a sloping public way, walkway or driveway having an established grade and serving as a landing, the bottom or top riser is permitted to be reduced along the slope ((~~to less than 4 inches (102 mm) in height with the variation in height of the bottom or top riser not to exceed one unit vertical in 12 units horizontal (8-percent slope) of stairway width. The nosings or leading edges of treads at such nonuniform height risers shall have a distinctive marking stripe, different from any other nosing marking provided on the stair flight. The distinctive marking stripe shall be visible in descent of the stair and shall have a slip-resistant surface. Marking stripes shall have a width of at least 1 inch (25 mm) but not more than 2 inches (51 mm).~~))

1009.3.2 Profile. The radius of curvature at the leading edge of the tread shall be not greater than 0.5 inch (12.7 mm). Beveling of nosings shall not exceed 0.5 inch (12.7 mm). Risers shall be solid and vertical or sloped from the underside of the leading edge of the tread above at an angle not more than 30 degrees (0.52 rad) from the vertical. The leading edge (nosings) of treads shall project not more than 1.25 inches (32 mm) beyond the tread below and all projections of the leading edges shall be of uniform size, including the leading edge of the floor at the top of a flight.

CITY CLERK

Exceptions:

1. Solid risers are not required for stairways that are not required to comply with Section 1007.3, provided that the opening between treads does not permit the passage of a sphere with a diameter of 4 inches (102 mm).
2. Solid risers are not required for occupancies in Group I-3.

Section 93. Subsection 1009.6 of the International Building Code, 2003 Edition, is amended as follows:

1009.6 Vertical rise. A flight of stairs shall not have a vertical rise greater than 12 feet (3658 mm) between floor levels or landings.

Exceptions:

1. Aisle stairs complying with Section 1024.
2. Stairways that are not part of a required means of egress.

Section 94. Subsections 1009.11 and 1009.12 of the International Building Code, 2003 Edition, are amended as follows:

1009.11 Handrails. Stairways shall have handrails on each side. Handrails shall be adequate in strength and attachment in accordance with Section 1607.7. Handrails for ramps, where required by Section 1010.8, shall comply with this section.

Exceptions:

1. Aisle stairs complying with Section 1024 provided with a center handrail need not have additional handrails.
2. Stairways within dwelling units, spiral stairways and aisle stairs serving seating only on one side are permitted to have a handrail on one side only.

3. Decks, patios and walkways that have a single change in elevation where the landing depth on each side of the change of elevation is greater than what is required for a landing do not require handrails.
4. In Group R-3 occupancies, a change in elevation consisting of a single riser at an entrance or egress door does not require handrails.
5. Changes in room elevations of only one riser within dwelling units and sleeping units in Group R-2 and R-3 occupancies do not require handrails.

1009.11.1 Height. Handrail height, measured above stair tread nosings, or finish surface of ramp slope, shall be uniform, not less than 34 inches (864 mm) and not more than 38 inches (965 mm).

1009.11.2 Intermediate handrails. Intermediate handrails are required so that all portions of the stairway width required for egress capacity are within 30 inches (762 mm) of a handrail. On monumental stairs, handrails shall be located along the most direct path of egress travel.

1009.11.3 Handrail graspability. Handrails with a circular cross section shall have an outside diameter of at least 1.25 inches (32 mm) and not greater than 2 inches (51 mm) or shall provide equivalent graspability. If the handrail is not circular, it shall have a perimeter dimension of at least 4 inches (102 mm) and not greater than 6.25 inches (160 mm) with a maximum cross-section dimension of 2.25 inches (57 mm). Edges shall have a minimum radius of 0.01 inch (0.25 mm).

1009.11.4 Continuity. Handrail-gripping surfaces shall be continuous, without interruption by newel posts or other obstructions.

Exceptions:

1. Handrails within dwelling units are permitted to be interrupted by a newel post at a stair landing.

2. Within a dwelling unit, the use of a volute, turnout or starting easing is allowed on the lowest tread.
3. Handrail brackets or balusters attached to the bottom surface of the handrail that do not project horizontally beyond the sides of the handrail within 1.5 inches (38 mm) of the bottom of the handrail shall not be considered to be obstructions and provided further that for each 0.5 inch (13 mm) of additional handrail perimeter dimension above 4 inches (102 mm), the vertical clearance dimension of 1.5 inches (38 mm) shall be permitted to be reduced by 0.125 inch (3 mm).
4. Handrails on stairways that are not part of a required means of egress need not be continuous.

1009.11.5 Handrail extensions. Handrails shall return to a wall, guard or the walking surface or shall be continuous to the handrail of an adjacent stair flight. Where handrails are not continuous between flights, the handrails shall extend horizontally at least 12 inches (305 mm) beyond the top riser and continue to slope for the depth of one tread beyond the bottom riser.

Exceptions:

1. Handrails within a dwelling unit that is not required to be accessible need extend only from the top riser to the bottom riser.
2. Aisle handrails in Group A occupancies in accordance with Section 1024.13.
3. Handrail extensions are not required on handrails on stairways that are not part of a required means of egress.

1009.11.6 Clearance. Clear space between a handrail and a wall or other surface shall be a minimum of 1.5 inches (38 mm). A handrail and a wall or other surface adjacent to the handrail shall be free of any sharp or abrasive elements.

CITY CLERK

1009.11.7 Stairway projections. Projections into the required width at each handrail shall not exceed 4.5 inches (114 mm) at or below the handrail height. Projections into the required width shall not be limited above the minimum headroom height required in Section 1009.2.

1009.12 Stairway to roof. In buildings four or more stories in height above grade at least one stairway shall extend to the roof surface through a penthouse complying with Section 1509.2. ((~~,unless the roof has a slope steeper than four units vertical in 12 units horizontal (33 percent slope). In buildings without an occupied roof, access to the roof from the top story shall be permitted to be by an alternating tread device.~~))

Exceptions:

1. A stairway to the roof is not required in Group R-3 occupancies.
2. Penthouses are not required for roofs with a slope steeper than four units vertical in 12 units horizontal (33 percent slope).

1009.12.1 Roof access. Where a stairway is provided to ((~~a roof, access to the roof shall be provided through a penthouse complying with Section 1509.2.~~)) the top floor of any building four or more stories in height and a penthouse is not required, an approved ladder and roof hatch openable to the exterior shall be provided at the highest point of the stair shaft. The roof hatch shall be not less than 11 square feet (1.1 m^2) in area and shall have a minimum dimension of 2 feet, 6 inches (762 mm). See Section 403 for provisions for high-rise buildings.

Exception: A roof hatch need not be provided for stairways that extend to the roof with an opening onto that roof.

((~~**Exception:** In buildings without an occupied roof, access to the roof shall be permitted to be a roof hatch or trap door not less than 16 square feet (1.5 m^2) in area and having a minimum dimension of 2 feet (610 mm).~~))

Section 95. A new Subsection 1009.13 is added to the Seattle Building Code, 2003 Edition, to read as follows:

[W] 1009.13 Ladders. Stairs or ladders used in the interior of individual dwelling units to gain access to areas 200 square feet (18.6 m^2) or less which do not contain the primary bathroom or kitchen are exempt from the requirements of Section 1009.

Section 96. Subsection 1010.8 of the International Building Code, 2003 Edition, is amended as follows:

[W]1010.8 Handrails. Ramps with a rise greater than 6 inches (152 mm) shall have handrails on both sides complying with Section 1009.11. At least one handrail shall extend in the direction of ramp run not less than 12 inches (305 mm) horizontally beyond the top and bottom of the ramp runs.

Section 97. Section 1011 of the International Building Code, 2003 Edition, is amended as follows:

1011.1 Where required. Exits and exit access doors shall be marked by an approved exit sign readily visible from any direction of egress travel. Access to exits shall be marked by readily visible exit signs in cases where the exit or the path of egress travel is not immediately visible to the occupants. Exit sign placement shall be such that no point in an exit access corridor is more than 100 feet (30 480 mm) or the listed viewing distance for the sign, whichever is less, from the nearest visible exit sign. Either exit signs or exit placards shall be located at any other location determined by the building official to be necessary to clearly indicate the direction of egress.

Exceptions:

1. Exit signs are not required in rooms or areas which require only one exit or exit access other than in buildings designed with a single exit stairway according to Section 1018.3 exception 4.
2. Main exterior exit doors or gates which obviously and clearly are identifiable as exits need not have exit signs where approved by the building official.
3. Exit signs are not required in occupancies in Group U and individual sleeping units or dwelling units in Group R-1, R-2 or R-3.
4. Exit signs are not required in sleeping areas in occupancies in Group I-3.
5. In occupancies in Groups A-4 and A-5, exit signs are not required on the seating side of vomitories or openings into seating areas where exit signs are provided in the concourse that are readily apparent from the vomitories. Egress lighting is provided to identify each vomitory or opening within the seating area in an emergency.
6. Exit signs are not required within individual tenant spaces of Group B offices.
7. Exit signs shall not be required on exterior stairways serving exterior exit balconies.

Interpretation I1011.1: Exit placards may be used to identify exits in occupancies where exit signs are not required.

1011.2 Illumination. Exit signs shall be internally or externally illuminated at all times.

Exception: Tactile signs required by Section 1011.3 need not be provided with illumination.

1011.3 Tactile exit signs. A tactile sign stating EXIT and complying with ICC A117.1 shall be provided adjacent to each door to an egress stairway, an exit passageway and the exit discharge.

CITY CLERK

1011.4 ((~~Internally illuminated~~)) Listing of exit signs. ((~~Internally illuminated~~)) All exit signs shall be listed and labeled and shall be installed in accordance with the manufacturer's instructions and Section 2702. Exit signs shall be illuminated at all times.

1011.5 Externally illuminated exit signs. Externally illuminated exit signs shall comply with Sections 1011.5.1 through 1011.5.3.

1011.5.1 Graphics. Every exit sign, exit placard and directional exit sign shall have plainly legible green letters not less than 6 inches (152 mm) high with the principal strokes of the letters not less than 0.75 inch (19.1 mm) wide. The word "EXIT" shall have letters having a width not less than 2 inches (51 mm) wide except the letter "I," and the minimum spacing between letters shall not be less than 0.375 inch (9.5 mm). Signs and placards larger than the minimum established in this section shall have letter widths, strokes and spacing in proportion to their height.

The word "EXIT" shall be in high contrast with the background and shall be clearly discernible when the exit sign illumination means is or is not energized. If an arrow is provided as part of the exit sign or placard, the construction shall be such that the arrow direction cannot be readily changed.

EXCEPTION: Existing exit signs or placards with letters at least 5 inches (127 mm) in height may be reused.

((~~**1011.5.2 Exit sign illumination.** The face of an exit sign illuminated from an external source shall have an intensity of not less than 5 foot-candles (54 lux).~~))

1011.5.3 Power source. Exit signs shall be illuminated at all times. To ensure continued illumination for a duration of not less than 90 minutes in case of primary power loss, the sign illumination means shall be connected to an emergency power system provided from storage batteries, unit equipment or an on-site generator. The installation of the emergency power system shall be in accordance with Section 2702.

ACTING CITY CLERK

Exception: Approved exit sign illumination means that provide continuous illumination independent of external power sources for a duration of not less than 90 minutes, in case of primary power loss, are not required to be connected to an emergency electrical system.

1011.5.4 Not-an-Exit Warnings. Placards reading "NOT AN EXIT" shall be installed at all doorways, passageways or stairways which are not exits, exit accesses or exit discharges, and which may be mistaken for an exit. A sign indicating the use of the doorway, passageway or stairway, such as "TO BASEMENT", "STORE ROOM", "LINEN CLOSET", is permitted in lieu of the "NOT AN EXIT" sign.

Section 98. Subsection 1013.2 of the International Building Code, 2003 Edition, is amended as follows:

1013.2 Egress through intervening spaces. Egress from a room or space shall not pass through adjoining or intervening rooms or areas, except where such adjoining rooms or areas are accessory to the area served; are not a high-hazard occupancy and provide a discernible path of egress travel to an exit. Egress shall not pass through kitchens, storage rooms, closets or spaces used for similar purposes. An exit access shall not pass through a room that can be locked to prevent egress. Means of egress from dwelling units or sleeping areas shall not lead through other sleeping areas, toilet rooms or bathrooms. Unless approved by the building official, where two or more exits are required, exit travel shall not pass through an exit enclosure as the only way to reach another exit.

Exceptions:

1. Means of egress are not prohibited through a kitchen area serving adjoining rooms constituting part of the same dwelling unit or sleeping unit.

ACTING CITY CLERK

2. Means of egress are not prohibited through adjoining or intervening rooms or spaces in a Group H occupancy when the adjoining or intervening rooms or spaces are the same or a lesser hazard occupancy group.

1013.2.1 Multiple tenants. Where more than one tenant occupies any one floor of a building or structure, each tenant space, dwelling unit and sleeping unit shall be provided with access to the required exits without passing through adjacent tenant spaces, dwelling units and sleeping units.

1013.2.2 Group I-2. Habitable rooms or suites in Group I-2 occupancies shall have an exit access door leading directly to an exit access corridor.

Exceptions:

1. Rooms with exit doors opening directly to the outside at ground level.
2. Patient sleeping rooms are permitted to have one intervening room if the intervening room is not used as an exit access for more than eight patient beds.
3. Special nursing suites are permitted to have one intervening room where the arrangement allows for direct and constant visual supervision by nursing personnel.
4. For rooms other than patient sleeping rooms, suites of rooms are permitted to have one intervening room if the travel distance within the suite to the exit access door is not greater than 100 feet (30 480 mm) and are permitted to have two intervening rooms where the travel distance within the suite to the exit access door is not greater than 50 feet (15 240 mm).

Suites of sleeping rooms shall not exceed 5,000 square feet (465 m^2). Suites of rooms, other than patient sleeping rooms, shall not exceed 10,000 square feet (929 m^2). Any patient sleeping room, or any suite that includes patient sleeping rooms, of more than 1,000 square feet (93 m^2) shall have at least two exit access doors remotely located from each

ACTING CITY CLERK

other. Any room or suite of rooms, other than patient sleeping rooms, of more than 2,500 square feet (232 m^2) shall have at least two access doors remotely located from each other. The travel distance between any point in a Group I-2 occupancy and an exit access door in the room shall not exceed 50 feet (15 240 mm). The travel distance between any point in a suite of sleeping rooms and an exit access door of that suite shall not exceed 100 feet (30 480 mm).

Section 99. Subsection 1013.5 of the International Building Code, 2003 Edition, is amended as follows:

1013.5 Egress balconies. Balconies used for egress purposes shall conform to the same requirements as corridors for width, headroom, dead ends and projections. Exterior balconies shall be designed to minimize accumulation of snow or ice that impedes the means of egress.

Exception: Exterior balconies and concourses in outdoor stadiums shall be exempt from the design requirement to protect against the accumulation of snow or ice.

1013.5.1 Wall separation. Exterior egress balconies shall be separated from the interior of the building by walls and opening protectives as required for corridors.

Exceptions:

1. Separation is not required where the exterior egress balcony is served by at least two stairs and a dead-end travel condition does not require travel past an unprotected opening to reach a stair.
2. Separation is not required in buildings equipped throughout with an automatic sprinkler system in accordance with Section 903.3.1.1 or 903.3.1.2.

1013.5.2 Openness. The long side of an egress balcony shall be at least 50 percent open, and the open area above the guards shall be so distributed as to minimize the accumulation of smoke or toxic gases.

ACTING CITY CLERK

Section 100. Section 1014.2 of the International Building Code, 2003 Edition, is amended as follows:

1014.2 Exit or exit access doorway arrangement. Required exits shall be located in a manner that makes their availability obvious. Exits shall be unobstructed at all times. Exit and exit access doorways shall be arranged in accordance with Sections 1014.2.1 and 1014.2.2.

1014.2.1 Two exits or exit access doorways. Where two exits or exit access doorways are required from any portion of the exit access, the exit doors or exit access doorways shall be placed a distance apart equal to not less than one-half of the length of the maximum overall diagonal dimension of the building or area to be served measured in a straight line between exit doors or exit access doorways. Interlocking or scissor stairs <u>and stairways that share a wall with other exit enclosures</u> shall be counted as one exit stairway.

Exceptions:

1. Where exit enclosures are provided as a portion of the required exit and are interconnected by a 1-hour fire-resistance-rated corridor conforming to the requirements of Section 1016, the required exit separation shall be measured along the shortest direct line of travel within the corridor.
2. Where a building is equipped throughout with an automatic sprinkler system in accordance with Section 903.3.1.1 or 903.3.1.2, the separation distance of the exit doors or exit access doorways shall not be less than one-third of the length of the maximum overall diagonal dimension of the area served.
3. <u>Where it is not practical to separate exits by one-half the diagonal dimension, exits from retail and office tenant spaces in Group B and M Occupancies shall be as far apart as reasonably practicable as determined by the building official.</u>

ACTING CITY CLERK

1014.2.2 Three or more exits or exit access doorways. Where access to three or more exits is required, at least two exit doors or exit access doorways shall be placed a distance apart equal to not less than one-half of the length of the maximum overall diagonal dimension of the area served measured in a straight line between such exit doors or exit access doorways. Additional exits or exit access doorways shall be arranged a reasonable distance apart so that if one becomes blocked, the others will be available.

Exception: Where a building is equipped throughout with an automatic sprinkler system in accordance with Section 903.3.1.1 or 903.3.1.2, the separation distance of at least two of the exit doors or exit access doorways shall not be less than one-third of the length of the maximum overall diagonal dimension of the area served.

Section 101. Section 1015.1 and Table 1015.1 of the International Building Code, 2003 Edition, are amended as follows:

1015.1 Travel distance limitations. Exits shall be so located on each story such that the maximum length of exit access travel, measured from the most remote point within a story to the entrance to an exit along the natural and unobstructed path of egress travel, shall not exceed the distances given in Table 1015.1.

Where the path of exit access includes unenclosed stairways or ramps within the exit access or includes unenclosed exit ramps or stairways as permitted in Section 1019.1, the distance of travel on such means of egress components shall also be included in the travel distance measurement. The measurement along stairways shall be made on a plane parallel and tangent to the stair tread nosings in the center of the stairway.

Exceptions:

1. Travel distance in open parking garages is permitted to be measured to the closest riser of open stairs.

ACTING CITY CLERK

2. In outdoor facilities with open exit access components and open exterior stairs or ramps, travel distance is permitted to be measured to the closest riser of a stair or the closest slope of the ramp.
3. Where an exit stair is permitted to be unenclosed in accordance with Exception 8 or 9 of Section 1019.1, the travel distance shall be measured from the most remote point within a building to an exit discharge.

TABLE 1015.1
EXIT ACCESS TRAVEL DISTANCE[a]

OCCUPANCY	WITHOUT SPRINKLER SYSTEM (feet)	WITH SPRINKLER SYSTEM (feet)
A, E, F-1, I-1, M, R, S-1	200	250[b]
B	200	300[c]
F-2, S-2, U	300	400[b]
H-1	Not Permitted	75[c]
H-2	Not Permitted	100[c]
H-3	Not Permitted	150[c]
H-4	Not Permitted	175[c]
H-5	Not Permitted	200[c]
I-2, I-3, I-4	150	200[c]

For SI:1 foot = 304.8 mm.

a. See the following sections for modifications to exit access travel distance requirements:

Section 402: For the distance limitation in malls.

Section 404: For the distance limitation through an atrium space.

Section 1015.2: For increased limitation in Groups F-1 and S-1.

Section 1024.7: For increased limitation in assembly seating.

Section 1024.7: For increased limitation for assembly open-air seating.

Section 1018.2: For buildings with one exit.

Chapter 31: For the limitation in temporary structures.

b. Buildings equipped throughout with an automatic sprinkler system in accordance with Section 903.3.1.1 or 903.3.1.2. See Section 903 for occupancies where sprinkler systems according to Section 903.3.1.2 are permitted.

ACTING CITY CLERK

c. Buildings equipped throughout with an automatic sprinkler system in accordance with Section 903.3.1.1.

Note: Additional exit enclosures and/or corridors constructed as smoke barriers may be required for standpipe hose connections. See Section 905.4

Section 102. Subsection 1016.1 and Table 1016.1 of the International Building Code, 2003 Edition, are amended as follows:

1016.1 Construction. Corridors shall be fire-resistance rated in accordance with Table 1016.1. The corridor walls required to be fire-resistance rated shall comply with Section 708 for fire partitions.

Exceptions:

1. A fire-resistance rating is not required for corridors in an occupancy in Group E where each room that is used for instruction has at least one door directly to the exterior and rooms for assembly purposes have at least one-half of the required means of egress doors opening directly to the exterior. Exterior doors specified in this exception are required to be at ground level.
2. A fire-resistance rating is not required for corridors contained within a dwelling or sleeping unit in an occupancy in Group R.
3. A fire-resistance rating is not required for corridors in open parking garages.
4. A fire-resistance rating is not required for corridors in an occupancy in Group B which is a space requiring only a single means of egress complying with Section 1014.1.
5. In office areas located in buildings of Types IA or IB construction, corridor walls need not be of fire-resistive construction where the corridor side of the corridor

ACTING CITY CLERK

walls is finished with materials having a maximum Class B rating as defined in Chapter 8. This exception does not apply to outpatient clinics and medical offices.

6. The occupant load of Group B conference rooms, lunch rooms without grease-producing cooking and other assembly rooms with an occupant load of less than 50 in each room need not be considered when determining whether corridor construction is required, provided such rooms are accessory to an office tenant located in a building of Type IA or IB construction. This provision may be used in other construction types when the floor on which the assembly room is located is equipped with an automatic sprinkler system.

TABLE 1016.1
CORRIDOR FIRE-RESISTANCE RATING

OCCUPANCY	OCCUPANT LOAD SERVED BY CORRIDOR	REQUIRED FIRE-RESISTANCE RATING(hours)	
		Without sprinkler system	With sprinkler system[c]
H-1, H-2, H-3	All	Not Permitted	1
H-4, H-5	Greater than 30	Not Permitted	1
A, B, E, F, M, S, U	Greater than 30	1	0
R	((~~Greater than 10~~)) All	1	((~~0.5~~)) 1
I-2[a], I-4	All	Not Permitted	0
I-1, I-3	All	Not Permitted	1[b]

a. For requirements for occupancies in Group I-2, see Section 407.3.

b. For a reduction in the fire-resistance rating for occupancies in Group I-3, see Section 408.7.

c. Buildings equipped throughout with an automatic sprinkler system in accordance with Section 903.3.1.1 or 903.3.1.2 where allowed.

Section 103. Subsection 1016.3 and 1016.4 of the International Building Code, 2003 Edition, are amended as follows:

ACTING CITY CLERK

1016.3 Dead ends. Where more than one exit or exit access doorway is required, the exit access shall be arranged such that there are no dead ends in corridors. In other than Group B office occupancies in Types IA and IB construction, dead ends shall not be more than ((~~20~~)) 25 feet (((~~6096~~)) 7620 mm) in length. In buildings of Types IA and IB construction, areas containing Group B offices may have dead ends not exceeding 75 feet (22 860 mm) in length, provided the cumulative occupant load shall not exceed 50 for all areas for which the dead end serves as the only means of egress.

Exceptions:

1. In occupancies in Group I-3 of Occupancy Condition 2, 3 or 4 (see Section 308.4), the dead end in a corridor shall not exceed 50 feet (15 240 mm).
2. In occupancies in Groups B and F where the building is equipped throughout with an automatic sprinkler system in accordance with Section 903.3.1.1, the length of dead-end corridors shall not exceed 50 feet (15 240 mm).
3. A dead-end corridor shall not be limited in length where the length of the dead-end corridor is less than 2.5 times the least width of the dead-end corridor.

1016.4 Air movement in corridors. Exit access corridors shall not serve as supply, return, exhaust, relief or ventilation air ducts or plenums except as allowed by Seattle Mechanical Code Section 601.2.

((~~**Exceptions:**~~

~~1. Use of a corridor as a source of makeup air for exhaust systems in rooms that open directly onto such corridors, including toilet rooms, bathrooms, dressing rooms, smoking lounges and janitor closets, shall be permitted provided that each such corridor is directly supplied with outdoor air at a rate greater than the rate of makeup air taken from the corridor.~~

ACTING CITY CLERK

~~2. Where located within a dwelling unit, the use of corridors for conveying return air shall not be prohibited.~~

~~3. Where located within tenant spaces of 1,000 square feet (93 m²) or less in area, utilization of corridors for conveying return air is permitted.~~))

1016.4.1 Corridor ceiling. Use of the space between the corridor ceiling and the floor or roof structure above as a return air plenum is permitted for one or more of the following conditions:

1. The corridor is not required to be of fire-resistance-rated construction;
2. The corridor is separated from the plenum by fire-resistance-rated construction;
3. The air-handling system serving the corridor is shut down upon activation of the air-handling unit smoke detectors required by the *International Mechanical Code.*
4. The air-handling system serving the corridor is shut down upon detection of sprinkler waterflow where the building is equipped throughout with an automatic sprinkler system; or
5. The space between the corridor ceiling and the floor or roof structure above the corridor is used as a component of an approved engineered smoke control system.

Section 104. Subsection 1017.2 of the International Building Code, 2003 Edition, is amended as follows:

1017.2 Exterior exit doors. Buildings or structures used for human occupancy shall have at least one exterior door that meets the requirements of Section 1008.1.1 <u>and Section 1008.1.2</u>.

1017.2.1 Detailed requirements. Exterior exit doors shall comply with the applicable requirements of Section 1008.1.

1017.2.2 Arrangement. Exterior exit doors shall lead directly to the exit discharge or the public way.

ACTING CITY CLERK

Section 105. Subsections 1018.1 and 1018.2 of the International Building Code, 2003 Edition, are amended as follows:

1018.1 Minimum number of exits. All rooms and spaces within each story shall be provided with and have access to the minimum number of approved independent exits as required by Table 1018.1 based on the occupant load, except as modified in Section 1014.1 or 1018.2. For the purposes of this chapter, occupied roofs shall be provided with exits as required for stories. The required number of exits from any story, basement or individual space shall be maintained until arrival at grade or the public way.

Exceptions:

1. Occupied roofs with an occupant load of 10 or less may have one exit.
2. Access to only one exit or exit-access doorway is permitted for floors below the first story above grade plane where:
   - 2.1 The area of the floor does not exceed 900 square feet (83.61 m^2);
   - 2.2 Travel distance is less than 50 feet (15 240 mm); and
   - 2.3 The floor contains only storage rooms, laundry rooms, and maintenance offices.

1018.1.1 Open parking structures. Parking structures shall not have less than two exits from each parking tier, except that only one exit is required where vehicles are mechanically parked. Unenclosed vehicle ramps shall not be considered as required exits unless pedestrian facilities are provided.

1018.1.2 Helistops. The means of egress from helistops shall comply with the provisions of this chapter, provided that landing areas located on buildings or structures shall have two or more exits. For landing platforms or roof areas less than 60 feet (18 288 mm) long, or less

ACTING CITY CLERK

than 2,000 square feet (186 m^2) in area, the second means of egress is permitted to be a fire escape or ladder leading to the floor below.

1018.2 Buildings with one exit. Only one exit shall be required in buildings as described below:

1. Buildings described in Table 1018.2, provided that the building has not more than one level below the first story above grade plane.
2. Buildings of Group R-3 occupancy.
3. Single-level buildings with the occupied space at the level of exit discharge provided that the story or space complies with Section 1014.1 as a space with one means of egress.
4. Not more than 5 stories of Group R-2 occupancy in buildings not over 6 stories may be served by a single exit under the following conditions:
   - 4.1. There shall be no more than four dwelling units on any floor.
   - 4.2. The building shall be of not less than one-hour fire-resistive construction and shall also be equipped throughout with an automatic sprinkler system in accordance with Section 903.3.1.1 or 903.3.1.2. Residential type sprinkler heads shall be used in all habitable spaces in each dwelling unit.
   - 4.3. There shall be no more than two single exit stairway conditions on the same property.
   - 4.4. An exterior stairway or exit enclosure shall be provided. The exit enclosure, including any related exit passageway, shall be pressurized in accordance with Section 909.22. Doors in the exit enclosure shall swing into the exit enclosure regardless of the occupant load served, provided that doors from the exit enclosure to the building exterior may swing in the direction of exit travel.

4.5. A corridor shall separate each dwelling unit entry/exit door from the door to an exit enclosure, including any related exit passageway, on each floor. Dwelling unit doors shall not open directly into an enclosed stairway. Dwelling unit doors may open directly into an exterior stairway.

4.6. There shall be no more than 20 feet (6096 mm) of travel distance to the exit stairway from the entry/exit door of any dwelling unit.

4.7. The exit shall not terminate in an exit court where the court depth exceeds the court width unless it is possible to exit in either direction to the public way.

4.8. Elevators shall be pressurized in accordance with Section 909.22 or shall open into elevator lobbies. Elevator lobbies shall be separated from the remainder of the building and from the exit stairway with fire partitions. Doors shall be automatic closing actuated by smoke detector. Where approved by the building official, natural ventilation may be substituted for pressurization where the ventilation would prevent the accumulation of smoke or toxic gases.

4.9. Other occupancies are permitted in the same building provided they comply with all the requirements of this code. Except for parking garages accessory to the Group R occupancy, other occupancies shall not communicate with the Group R occupancy portion of the building or with the single-exit stairway.

4.10. There shall be no openings within 10 feet (3048 mm) of unprotected openings into the stairway other than required exit doors having a one-hour fire-resistance rating.

Section 106. Section 1019 of the International Building Code, 2003 Edition, is amended as follows:

ACTING CITY CLERK

1019.1 Enclosures required. Interior exit stairways and interior exit ramps shall be enclosed with fire barriers. Exit enclosures shall have a fire-resistance rating of not less than 2 hours where connecting more than four stories ((~~or more~~)) and not less than 1 hour where connecting ((~~less than~~)) four and fewer stories. The number of stories connected by the shaft enclosure shall include any basements but not any mezzanines. An exit enclosure shall not be used for any purpose other than means of egress, circulation and access. Enclosures shall be constructed as fire barriers in accordance with Section 706. Exit enclosures shall terminate at the exterior of the building or an exit passageway shall connect the exit enclosures to the exterior of the building.

Exceptions:

1. In other than Group H and I occupancies, a stairway serving an occupant load of less than 10 not more than one story above the level of exit discharge is not required to be enclosed.
2. Exits in buildings of Group A-5 where all portions of the means of egress are essentially open to the outside need not be enclosed.
3. Stairways serving and contained within a single residential dwelling unit or sleeping unit in occupancies in Group R-2 or R-3 and sleeping units in occupancies in Group R-1 are not required to be enclosed.
4. Stairways that are not a required means of egress element are not required to be enclosed where such stairways comply with Section 707.2.
5. Stairways in open parking structures which serve only the parking structure are not required to be enclosed.
6. Stairways in occupancies in Group I-3 as provided for in Section 408.3.6 are not required to be enclosed.

ACTING CITY CLERK

7. Means of egress stairways as required by Section 410.5.4 are not required to be enclosed.
8. In other than occupancy Groups H and I, a maximum of 50 percent of egress stairways serving one adjacent floor are not required to be enclosed, provided at least two means of egress are provided from both floors served by the unenclosed stairways. Any two such interconnected floors shall not be open to other floors.
9. In other than occupancy Groups H and I, interior egress stairways serving only the first and second stories of a building equipped throughout with an automatic sprinkler system in accordance with Section 903.3.1.1 are not required to be enclosed, provided at least two means of egress are provided from both floors served by the unenclosed stairways. Such interconnected stories shall not be open to other stories.

1019.1.1 Openings and penetrations. Exit enclosure opening protectives shall be in accordance with the requirements of Section 715.

Except as permitted in Section 402.4.6, openings in exit enclosures other than unexposed exterior openings shall be limited to those necessary for exit access to the enclosure from normally occupied spaces and for egress from the enclosure.

Interpretation I1019.1: Elevators and accessory rooms such as restrooms, storage closets, laundry rooms, electrical, communication closets and similar spaces shall not open into an exit enclosure.

Where interior exit enclosures are extended to the exterior of a building by an exit passageway, the door assembly from the exit enclosure to the exit passageway shall be protected by a fire door conforming to the requirements in Section 715.3. Fire door assemblies in exit enclosures shall comply with Section 715.3.4.

ACTING CITY CLERK

1019.1.2 Penetrations. Penetrations into and openings through an exit enclosure are prohibited except for required exit doors, equipment and ductwork necessary for independent pressurization, sprinkler piping, standpipes, electrical raceway for fire department communication and sprinkler monitoring, and electrical raceway serving the exit enclosure and terminating at a steel box not exceeding 16 square inches (0.010 m^2). Piping used exclusively for the drainage of rainfall runoff from roof areas is permitted to penetrate exit enclosures, provided the roof is not used for a helistop or heliport. Such penetrations shall be protected in accordance with Section 712. Unfired unit heaters required for freeze protection of fire protection equipment may penetrate one membrane. The conduit serving the heater may penetrate both membranes. There shall be no penetrations or communication openings, whether protected or not, between adjacent exit enclosures.

1019.1.3 Ventilation. Equipment and ductwork for exit enclosure ventilation shall comply with one of the following items:

1. Such equipment and ductwork shall be located exterior to the building and shall be directly connected to the exit enclosure by ductwork enclosed in construction as required for shafts.
2. Where such equipment and ductwork is located within the exit enclosure, the intake air shall be taken directly from the outdoors and the exhaust air shall be discharged directly to the outdoors, or such air shall be conveyed through ducts enclosed in construction as required for shafts.
3. Where located within the building, such equipment and ductwork shall be separated from the remainder of the building, including other mechanical equipment, with construction as required for shafts.

ACTING CITY CLERK

In each case, openings into the fire-resistance-rated construction shall be limited to those needed for maintenance and operation and shall be protected by self-closing fire-resistance-rated devices in accordance with Chapter 7 for enclosure wall opening protectives.

Exit enclosure ventilation systems shall be independent of other building ventilation systems.

1019.1.4 Vertical enclosure exterior walls. Exterior walls of a vertical exit enclosure shall comply with the requirements of Section 704 for exterior walls. Where nonrated walls or unprotected openings enclose the exterior of the stairway and the walls or openings are exposed by other parts of the building at an angle of less than 180 degrees (3.14 rad), the building exterior walls within 10 feet (3048 mm) horizontally of a nonrated wall or unprotected opening shall be constructed as required for a minimum 1-hour fire-resistance rating with $^3/_4$-hour opening protectives. This construction shall extend vertically from the ground to a point 10 feet (3048 mm) above the topmost landing of the stairway or to the roof line, whichever is lower.

1019.1.5 Enclosures under stairways. The walls and soffits within enclosed usable spaces under enclosed and unenclosed stairways shall be protected by 1-hour fire-resistance-rated construction, or the fire-resistance rating of the stairway enclosure, whichever is greater. Access to the enclosed usable space shall not be directly from within the stair enclosure.

Exception: Spaces under stairways serving and contained within a single residential dwelling unit in Group R-2 or R-3 as applicable in Section 101.2.

There shall be no enclosed usable space under exterior exit stairways unless the space is completely enclosed in 1-hour fire-resistance-rated construction. The open space under exterior stairways shall not be used for any purpose.

ACTING CITY CLERK

1019.1.6 Discharge identification. A stairway in an exit enclosure shall not continue below the level of exit discharge unless an approved barrier is provided at the level of exit discharge to prevent persons from unintentionally continuing into levels below. Directional exit signs shall be provided as specified in Section 1011.

1019.1.7 Stairway ((~~floor number~~)) signs. A sign shall be provided at each floor landing in interior vertical exit enclosures connecting more than three stories designating the floor level, the terminus of the top and bottom of the stair enclosure and the identification of the stair. The signage shall also state the story of, and the direction to the exit discharge, ((~~and the availability of~~)) whether there is roof access from the stairway for the fire department, and whether the roof is accessed by roof hatch. The sign shall be located 5 feet (1524 mm) above the floor landing in a position which is readily visible when the doors are in the open and closed positions.

1019.1.8 Smokeproof enclosures. In buildings required to comply with Section 403 or 405, each of the exits of a building that serves stories where the floor surface is located more than 75 feet (22 860 mm) above the lowest level of fire department vehicle access or more than 30 feet (9144 mm) below the level of exit discharge serving such floor levels shall be a smokeproof enclosure or pressurized stairway in accordance with Section 909.20.

Exception: Smokeproof enclosures are not required in buildings that comply with CA909.

1019.1.8.1 Enclosure exit. A smokeproof enclosure or pressurized stairway shall exit into a public way or into an exit passageway, yard or open space having direct access to a public way. The exit passageway shall be without other openings and shall be separated from the remainder of the building by 2-hour fire-resistance-rated construction.

ACTING CITY CLERK

Exceptions:

1. Openings in the exit passageway serving a smokeproof enclosure are permitted where the exit passageway is protected and pressurized in the same manner as the smokeproof enclosure, and openings are protected as required for access from other floors.
2. Openings in the exit passageway serving a pressurized stairway are permitted where the exit passageway is protected and pressurized in the same manner as the pressurized stairway.

1019.1.8.2 Enclosure access. Access to the stairway within a smokeproof enclosure shall be by way of a vestibule or an open exterior balcony.

Exception: Access is not required by way of a vestibule or exterior balcony for stairways using the pressurization alternative complying with Section 909.20.5.

1019.1.9 Equipment in exit enclosures. Equipment is prohibited in exit enclosures except for equipment necessary for independent pressurization, lighting of the exit enclosure, sprinkler piping, standpipes, electrical equipment for fire department communication and sprinkler monitoring, and unit heaters required to protect fire protection equipment from freezing.

Section 107. Section 1020 of the International Building Code, 2003 Edition, is amended as follows:

1020.1 Exit passageway. Exit passageways serving as an exit component in a means of egress system shall comply with the requirements of this section. An exit passageway shall not be used for any purpose other than as a means of egress, circulation and access.

1020.2 Width. The width of exit passageways shall be determined as specified in Section 1005.1 but such width shall not be less than 44 inches (1118 mm), except that exit passageways

ACTING CITY CLERK

serving an occupant load of ((~~less than~~)) 50 or less shall not be less than 36 inches (914 mm) in width.

The required width of exit passageways shall be unobstructed.

Exception: Doors, when fully opened, and handrails, shall not reduce the required width by more than 7 inches (178 mm). Doors in any position shall not reduce the required width by more than one-half. Other nonstructural projections such as trim and similar decorative features are permitted to project into the required width 1.5 inches (38 mm) on each side.

1020.3 Construction. Exit passageway enclosures shall have walls, floors and ceilings of not less than 1-hour fire-resistance rating, and not less than that required for any connecting exit enclosure. Exit passageways shall be constructed as fire barriers in accordance with Section 706.

1020.4 Openings and penetrations. Exit passageway opening protectives shall be in accordance with the requirements of Section 715.

Except as permitted in Section 402.4.6, openings in exit passageways other than unexposed exterior openings shall be limited to those necessary for exit access to the exit passageway from normally occupied spaces and for egress from the exit passageway.

Interpretation I1020.4: Accessory rooms such as restrooms, storage closets, laundry rooms, electrical, communication closets and similar spaces shall not open into exit passageways.

Where interior exit enclosures are extended to the exterior of a building by an exit passageway, the door assembly from the exit enclosure to the exit passageway shall be protected by a fire door conforming to the requirements in Section 715.3. Fire door assemblies in exit passageways shall comply with Section 715.3.4.

Elevators shall not open into an exit passageway.

1020.5 Penetrations. Penetrations into and openings through an exit passageway are prohibited except for required exit doors, equipment and ductwork necessary for independent

CITY CLERK

pressurization, sprinkler piping, standpipes, electrical raceway for fire department communication and electrical raceway serving the exit passageway and terminating at a steel box not exceeding 16 square inches (0.010 m^2). Such penetrations shall be protected in accordance with Section 712. There shall be no penetrations or communicating openings, whether protected or not, between adjacent exit passageways.

Exception: Unfired unit heaters allowed by Section 1019.1.9 to be installed in exit enclosures may penetrate one membrane. The conduit serving the heater may penetrate both membranes.

Section 108. Section 1022.3 of the International Building Code, 2003 Edition, is amended as follows:

1022.3 Open side. Exterior exit ramps and stairways serving as an element of a required means of egress shall be at least 50 percent open on at least one side. An open side shall have a minimum of ((~~35~~)) 28 square feet (((~~3.3~~)) 2.6 m^2) of aggregate open area adjacent to each floor. The open area shall be distributed to prevent accumulation of smoke or toxic gases. ((~~level and the level of each intermediate landing. The required open area shall be located not less than 42 inches (1067 mm) above the adjacent floor or landing level.~~))

Section 109. Section 1023.1 of the International Building Code, 2003 Edition, is amended as follows:

1023.1 General. Exits shall discharge directly to the exterior of the building. The exit discharge shall be at grade or shall provide direct access to grade. The exit discharge shall not reenter a building except into an exit or as otherwise approved by the building official.

ACTING CITY CLERK

Exceptions:

1. A maximum of 50 percent of the number and capacity of the exit enclosures is permitted to egress through areas on the level of discharge provided all of the following are met:
   - 1.1. Such exit enclosures egress to a free and unobstructed way to the exterior of the building, which way is readily visible and identifiable from the point of termination of the exit enclosure.
   - 1.2. The entire area of the level of discharge is separated from areas below by construction conforming to the fire-resistance rating for the exit enclosure.
   - 1.3. The egress path from the exit enclosure on the level of discharge is protected throughout by an approved automatic sprinkler system. All portions of the level of discharge with access to the egress path shall either be protected throughout with an automatic sprinkler system installed in accordance with Section 903.3.1.1 or 903.3.1.2, or separated from the egress path in accordance with the requirements for the enclosure of exits.
2. A maximum of 50 percent of the number and capacity of the exit enclosures is permitted to egress through a vestibule provided all of the following are met:
   - 2.1. The entire area of the vestibule is separated from areas below by construction conforming to the fire-resistance rating for the exit enclosure.
   - 2.2. The depth from the exterior of the building is not greater than 10 feet (3048 mm) and the length is not greater than 30 feet (9144 mm).

2.3. The area is separated from the remainder of the level of exit discharge by construction providing protection at least the equivalent of approved wired glass in steel frames.

2.4. The area is used only for means of egress and exits directly to the outside.

3. Stairways in open parking garages complying with Section 1019.1, Exception 5, are permitted to egress through the open parking garage at the level of exit discharge.

Section 110. Subsection 1023.5 of the International Building Code, 2003 Edition, is amended as follows:

1023.5 Egress courts. Egress courts serving as a portion of the exit discharge in the means of egress system shall comply with the requirements of Section 1023.

1023.5.1 Width. The width of egress courts shall be determined as specified in Section 1005.1, but such width shall not be less than 44 inches (1118 mm), except as specified herein. Egress courts serving occupancies in Group R-3 applicable in Section 101.2 and Group U shall not be less than 36 inches (914 mm) in width.

The required width of egress courts shall be unobstructed to a height of 7 feet (2134 mm).

Exception: Doors, when fully opened, and handrails shall not reduce the required width by more than 7 inches (178 mm). Doors in any position shall not reduce the required width by more than one-half. Other nonstructural projections such as trim and similar decorative features are permitted to project into the required width 1.5 inches (38 mm) from each side.

Where an egress court exceeds the minimum required width and the width of such egress court is then reduced along the path of exit travel, the reduction in width shall be

ACTING CITY CLERK

gradual. The transition in width shall be affected by a guard not less than 36 inches (914 mm) in height and shall not create an angle of more than 30 degrees (0.52 rad) with respect to the axis of the egress court along the path of egress travel. In no case shall the width of the egress court be less than the required minimum.

1023.5.2 Construction and openings. Where an egress court serving a building or portion thereof is less than 10 feet (3048 mm) in width, the egress court walls shall be not less than 1-hour fire-resistance-rated exterior walls complying with Section 704 for a distance of 10 feet (3048 mm) above the floor of the court, and openings therein shall be equipped with fixed or self-closing, $^{3}/_{4}$-hour opening protective assemblies.

Exceptions:

1. Egress courts serving an occupant load of less than 10.
2. Egress courts serving Group R-3 as applicable in Section 101.2.
3. <u>In buildings other than those which have a single means of egress under Section 1018.2 exception 4, opening protection need not be provided where it is possible to exit in two directions from the court.</u>

Section 111. Subsection 1024.11 of the International Building Code, 2003 Edition, is amended as follows:

1024.11 Assembly aisle walking surfaces. Aisles with a slope not exceeding one unit vertical in eight units horizontal (12.5-percent slope) shall consist of a ramp having a slip-resistant walking surface. Aisles with a slope exceeding one unit vertical in eight units horizontal (12.5-percent slope) shall consist of a series of risers and treads that extends across the full width of aisles and complies with Sections 1024.11.1 through 1024.11.3.

ACTING CITY CLERK

[W] **EXCEPTION:** When provided with fixed seating, aisles in Group A-1 Occupancies are permitted to have a slope not steeper than one unit vertical to five units horizontal (20-percent slope).

1024.11.1 Treads. Tread depths shall be a minimum of 11 inches (279 mm) and shall have dimensional uniformity.

Exception: The tolerance between adjacent treads shall not exceed 0.188 inch (4.8 mm).

1024.11.2 Risers. Where the gradient of aisle stairs is to be the same as the gradient of adjoining seating areas, the riser height shall not be less than 4 inches (102 mm) nor more than 8 inches (203 mm) and shall be uniform within each flight.

Exceptions:

1. Riser height nonuniformity shall be limited to the extent necessitated by changes in the gradient of the adjoining seating area to maintain adequate sightlines. Where nonuniformities exceed 0.188 inch (4.8 mm) between adjacent risers, the exact location of such nonuniformities shall be indicated with a distinctive marking stripe on each tread at the nosing or leading edge adjacent to the nonuniform risers. Such stripe shall be a minimum of 1 inch (25 mm), and a maximum of 2 inches (51 mm), wide. The edge marking stripe shall be distinctively different from the contrasting marking stripe.
2. Riser heights not exceeding 9 inches (229 mm) shall be permitted where they are necessitated by the slope of the adjacent seating areas to maintain sightlines.

1024.11.3 Tread contrasting marking stripe. A contrasting marking stripe shall be provided on each tread at the nosing or leading edge such that the location of each tread is readily apparent when viewed in descent. Such stripe shall be a minimum of 1 inch (25 mm), and a maximum of 2 inches (51 mm), wide.

ACTING CITY CLERK

Exception: The contrasting marking stripe is permitted to be omitted where tread surfaces are such that the location of each tread is readily apparent when viewed in descent.

Section 112. Subsection 1024.13 of the International Building Code, 2003 Edition, is amended as follows:

1024.13 Handrails. Ramped aisles having a slope exceeding one unit vertical in 15 units horizontal (6.7-percent slope) and aisle stairs shall be provided with handrails located either at the side or within the aisle width.

Exceptions:

[W]1. Handrails are not required for ramped aisles having a gradient no greater than one unit vertical in ((~~eight~~)) five units horizontal (((~~12.5~~)) 20 percent slope) and seating on both sides.

2. Handrails are not required if, at the side of the aisle, there is a guard that complies with the graspability requirements of handrails.

1024.13.1 Discontinuous handrails. Where there is seating on both sides of the aisle, the handrails shall be discontinuous with gaps or breaks at intervals not exceeding five rows to facilitate access to seating and to permit crossing from one side of the aisle to the other. These gaps or breaks shall have a clear width of at least 22 inches (559 mm) and not greater than 36 inches (914 mm), measured horizontally, and the handrail shall have rounded terminations or bends.

((~~**1024.13.2 Intermediate handrails.** Where handrails are provided in the middle of aisle stairs, there shall be an additional intermediate handrail located approximately 12 inches (305 mm) below the main handrail.~~))

ACTING CITY CLERK

Section 113. Subsection 1101.2 of the International Building Code, 2003 Edition, is amended as follows:

1101.2 Design. Buildings and facilities shall be designed and constructed to be accessible in accordance with this code and ICC A117.1, except those portions of ICC A117.1 amended by this section.

1101.2.1 (ICC A117.1 Section 403) Landings for walking surfaces. The maximum rise for any run is 30 inches (762 mm). Landings shall be provided at the top and bottom of any run. Landings shall be level and have a minimum dimension measured in the direction of travel of not less than 60 inches (1525 mm).

1101.2.2 (ICC A117.1 Section 403.5) Clear width of accessible route. Clear width of an accessible route shall comply with ICC A117.1 Table 403.5. For exterior routes of travel, the minimum clear width shall be 44 inches (1118 mm).

1101.2.3 (ICC A117.1 Section 404.2.9) Door-opening force. Fire doors shall have the minimum opening force allowable by the building official. The maximum force for pushing open or pulling open doors other than fire doors shall be as follows:

1. Interior hinged door: 5.0 pounds (22.2 N)
2. Sliding or folding doors: 5.0 pounds (22.2 N)

At exterior doors where environmental conditions require a closing pressure greater than 8.5 pounds, power operated doors shall be used within the accessible route of travel. These forces do not apply to the force required to retract latch bolts or disengage other devices that hold the door in a closed position.

1101.2.4 (ICC A117.1 Section 502.6) Identification of accessible parking spaces. Where accessible parking spaces are required to be identified by signs, the signs shall include the International Symbol of Accessibility complying with ICC A117.1 Section 703.7. Such signs shall be 60 inches (1525 mm) minimum above the floor or ground surface of the

ACTING CITY CLERK

parking space, measured to the bottom of the sign. Van accessible parking spaces shall have an additional sign mounted below the International Symbol of Accessibility identifying the spaces as "Van Accessible."

1101.2.5 (ICC A117.1 Section 603.4) Coat hooks, shelves, dispensers, and other fixtures. Coat hooks provided within toilet rooms shall accommodate a forward reach or side reach complying with ICC A117.1 Section 308. Where provided, shelves shall be installed so that the top of the shelf is 40 inches (1015 mm) maximum above the floor or ground. Drying equipment, towel or other dispensers, and disposal fixtures shall be located 40 inches (1015 mm) maximum above the floor or ground to any rack, operating controls, receptacle or dispenser.

1101.2.6 (ICC A117.1 Section 604.6) Flush controls. Flush controls shall be hand operated or automatic. Hand operated flush controls for water closets shall be mounted for use from the wide side of the water closet area and not more than 44 inches (1118 mm) above the floor.

1101.2.7 (ICC A117.1 Section 604.7) Toilet paper dispensers. Toilet paper dispensers shall comply with ICC A117.1 Section 309.4 and shall be 7 inches (180 mm) minimum and 9 inches (230 mm) maximum in front of the water closet. The outlet of the dispenser shall be 15 inches (380 mm) minimum and 48 inches (1015 mm) maximum above the floor or ground. There shall be a clearance of 1 1/2 inches (38 mm) minimum below and 12 inches (305 mm) minimum above the grab bar. Dispensers shall not be of a type that control delivery, or that do not allow continuous paper flow. Other dispensers, and disposal fixtures shall be located 40 inches (1015 mm) maximum above the floor or ground to any rack, operating controls, receptacle or dispenser.

ACTING CITY CLERK

1101.2.8 (ICC A117.1 Section 609.2) Grab bars size. Grab bars shall have an outside diameter of not less than 1 1/4 inch (32 mm) nor more than 1 1/2 inches (38 mm) and shall provide a clearance of 1 1/2 inches (38 mm) between the grab bar and the wall.

1101.2.9 (ICC A117.1 Section 703.7.2.1) International Symbol of Accessibility. Where the International Symbol of Accessibility is required, it shall be proportioned complying with ICC A117.1 Figure 703.7.2.1. All interior and exterior signs depicting the International Symbol of Accessibility shall be white on a blue background.

1101.2.10 (ICC A117.1 Section 802.8) Lines of sight. Wheelchair spaces shall be located in places with unobstructed sight lines.

1101.2.11 (ICC A117.1 Section 404.3.5) Control switches. Control switches shall be mounted 36 inches above the floor and not less than 18 inches nor more than 36 inches horizontally from the nearest point of travel of the moving doors.

Section 114. Subsection 1102 of the International Building Code, 2003 Edition, is amended as follows:

1102.1 Definitions. The following words and terms shall, for the purposes of this chapter and as used elsewhere in the code, have the following meanings:

ACCESSIBLE. A site, building, facility or portion thereof, that complies with this chapter.

ACCESSIBLE ROUTE. A continuous, unobstructed path that complies with this chapter.

ACCESSIBLE UNIT. A dwelling unit or sleeping unit that complies with this code and Chapters 1 through 9 of ICC A117.1.

CIRCULATION PATH. An exterior or interior way of passage from one place to another for pedestrians.

CLOSED-CIRCUIT TELEPHONE. A telephone with a dedicated line such as a house phone, courtesy phone or phone that must be used to gain entrance to a facility.

ACTING CITY CLERK

COMMON USE. Interior or exterior circulation paths, rooms, spaces or elements that are not for public use and are made available for the shared use of two or more people.

DETECTABLE WARNING. A standardized surface feature built in or applied to walking surfaces or other elements to warn visually impaired persons of hazards on a circulation path.

DWELLING UNIT OR SLEEPING UNIT, MULTISTORY. A dwelling unit or sleeping unit with habitable space located on more than one story.

DWELLING UNIT OR SLEEPING UNIT, TYPE A. A dwelling unit or sleeping unit designed and constructed for accessibility in accordance with ICC A117.1.

DWELLING UNIT OR SLEEPING UNIT, TYPE B. A dwelling unit or sleeping unit designed and constructed for accessibility in accordance with ICC A117.1, consistent with the design and construction requirements of the federal Fair Housing Act.

EMPLOYEE WORK AREA. All or any portion of a space used only by employees and only for work. Corridors, toilet rooms, kitchenettes and break rooms are not employee work areas.

FACILITY. All or any portion of buildings, structures, site improvements, elements and pedestrian or vehicular routes located on a site.

INTENDED TO BE OCCUPIED AS A RESIDENCE. This refers to a dwelling unit or sleeping unit that can or will be used all or part of the time as the occupant's place of abode.

MAILBOXES. Receptacles for the receipt of documents, packages or other deliverable matter. Mailboxes include, but are not limited to, post office boxes and receptacles provided by commercial mail-receiving agencies, apartment houses and schools.

MULTILEVEL ASSEMBLY SEATING. Seating that is arranged in distinct levels where each level is comprised of either multiple rows, or a single row of box seats accessed from a separate level.

PUBLIC ENTRANCE. An entrance that is not a service entrance or a restricted entrance.

ACTING CITY CLERK

PUBLIC-USE AREAS. Interior or exterior rooms or spaces that are made available to the general public.

RESTRICTED ENTRANCE. An entrance that is made available for common use on a controlled basis, but not public use, and that is not a service entrance.

SELF-SERVICE STORAGE FACILITY. Real property designed and used for the purpose of renting or leasing individual
storage spaces to customers for the purpose of storing and removing personal property on a self-service basis.

SERVICE ENTRANCE. An entrance intended primarily for delivery of goods or services.

SITE. A parcel of land bounded by a property line or a designated portion of a public right-of-way.

TRANSIENT LODGING. A building, facility or portion thereof, excluding inpatient medical care facilities and long-term care facilities, that contains one or more dwelling units or sleeping units. Examples of transient lodging include, but are not limited to, resorts, group homes, hotels, motels, dormitories, homeless shelters, halfway houses and social service lodging.

WHEELCHAIR SPACE. A space for a single wheelchair and its occupant.

Section 115. A new Subsection 1103.2.15 is added to the Seattle Building Code, 2003 Edition, to read as follows:

1103.2.15 Modifications. Where full compliance with this chapter is impractical due to unique characteristics of the terrain, the building official is permitted to grant modifications in accordance with Section 104.10, provided that any portion of the building or structure that can be made accessible shall be made accessible to the greatest extent practical.

ACTING CITY CLERK

Section 116. A new Subsection 1103.3.2 is added to the International Building Code, 2003 Edition, to read as follows:

1103.3.2 Raised platforms. In banquet rooms or spaces where a head table or speaker's lectern is located on a raised platform, an accessible route shall be provided to the platform.

Section 117. Subsection 1104.4 of the International Building Code, 2003 Edition, is amended as follows:

1104.4 Multilevel buildings and facilities. At least one accessible route shall connect each accessible level, including mezzanines, in multilevel buildings and facilities.

Exceptions:

1. An accessible route is not required to stories and mezzanines above and below accessible levels that have an aggregate area of not more than 3,000 square feet (278.7 m^2). This exception shall not apply to:
    1.1. Multiple tenant facilities of Group M occupancies containing five or more tenant spaces;
    1.2. Levels containing offices of health care providers (Group B or I); ((~~or~~))
    1.3. Passenger transportation facilities and airports (Group A-3 or B); or
    1.4 Buildings owned or leased by government agencies.
2. In Group A, I, R and S occupancies, levels that do not contain accessible elements or other spaces required by Section 1107 or 1108 are not required to be served by an accessible route from an accessible level.
3. In air traffic control towers, an accessible route is not required to serve the cab and the floor immediately below the cab.

SEATTLE CITY CLERK

4. Where a two-story building or facility has one story with an occupant load of five or fewer persons that does not contain public use space, that story shall not be required to be connected by an accessible route to the story above or below.

Section 118. Section 1105 of the International Building Code, 2003 Edition, is amended as follows:

1105.1 Public entrances. In addition to accessible entrances required by Sections 1105.1.1 through 1105.1.6, at least 50 percent of all public entrances shall be accessible. <u>All exterior exits that are located adjacent to accessible areas and within 6 inches (152 mm) of grade shall be accessible.</u>

Exceptions:

1. An accessible entrance is not required to areas not required to be accessible.
2. Loading and service entrances that are not the only entrance to a tenant space.

1105.1.1 Parking garage entrances. Where provided, direct access for pedestrians from parking structures to buildings or facility entrances shall be accessible.

1105.1.2 Entrances from tunnels or elevated walkways. Where direct access is provided for pedestrians from a pedestrian tunnel or elevated walkway to a building or facility, at least one entrance to the building or facility from each tunnel or walkway shall be accessible.

1105.1.3 Restricted entrances. Where restricted entrances are provided to a building or facility, at least one restricted entrance to the building or facility shall be accessible.

1105.1.4 Entrances for inmates or detainees. Where entrances used only by inmates or detainees and security personnel are provided at judicial facilities, detention facilities or correctional facilities, at least one such entrance shall be accessible.

ACTING CITY CLERK

1105.1.5 Service entrances. If a service entrance is the only entrance to a building or a tenant space in a facility, that entrance shall be accessible.

1105.1.6 Tenant spaces, dwelling units and sleeping units. At least one accessible entrance shall be provided to each tenant, dwelling unit and sleeping unit in a facility.

Exceptions:

1. An accessible entrance is not required to tenants that are not required to be accessible.
2. An accessible entrance is not required to dwelling units and sleeping units that are not required to be Accessible units, Type A units or Type B units.

Section 119. Subsections 1106.3 and 1106.4 of the International Building Code, 2003 Edition, are amended as follows:

1106.3 ((~~Hospital o~~))Outpatient medical care facilities. For Group I-1 and I-2 occupancies providing outpatient medical care facilities, ((~~T~~))ten percent, but not less than one, of ((~~patient and visitor~~)) the parking spaces provided ((~~to serve hospital outpatient facilities~~)) accessory to such occupancies shall be accessible.

1106.4 ((~~Rehabilitation facilities and outpatient physical therapy facilities~~)) Inpatient and outpatient medical care facilities. For Group I-1 and I-2 units and facilities specializing in the treatment of persons with mobility impairments on either an inpatient or outpatient basis, ((~~T~~))twenty percent, but not less than one, of the ((~~portion of patient and visitor~~)) parking spaces ((~~serving rehabilitation facilities and outpatient physical therapy facilities~~)) provided accessory to such units and facilities shall be accessible.

Section 120. Subsections 1106.6 and 1106.7 of the International Building Code, 2003 Edition, are amended as follows:

ACTING CITY CLERK

1106.6 Location. Accessible parking spaces shall be located on the shortest accessible route of travel from adjacent parking to an accessible building entrance. Accessible parking spaces shall be dispersed among the various types of parking facilities provided. In parking facilities that do not serve a particular building, accessible parking spaces shall be located on the shortest route to an accessible pedestrian entrance to the parking facility. Where buildings have multiple accessible entrances with adjacent parking, accessible parking spaces shall be dispersed and located near the accessible entrances. Wherever practical, the accessible route of travel shall not cross lanes of vehicular traffic. Where crossing traffic lanes is necessary, the route of travel shall be designated and marked as a crosswalk.

Exception: In multilevel parking structures, van-accessible parking spaces are permitted on one level.

1106.7 Passenger loading zones. Passenger loading zones shall be designed and constructed in accordance with ICC A117.1.

1106.7.1 Continuous loading zones. Where passenger loading zones are provided, one passenger loading zone in every continuous 100 linear feet (30.4 m) maximum of loading zone space shall be accessible.

1106.7.2 Medical facilities. A passenger loading zone shall be provided at an accessible entrance to licensed medical and long-term care facilities where people receive physical or medical treatment or care and where the period of stay exceeds 24 hours.

1106.7.3 Valet parking. A passenger loading zone shall be provided at valet parking services.

1106.7.4 Sheltered entrance. In Group I-2 Occupancies, at least one accessible entrance that complies with Section 1105 shall be under shelter. Every such entrance shall include a passenger loading zone that complies with Section 1106.7.

ACTING CITY CLERK

Section 121. Subsection 1107.6 of the International Building Code, 2003 Edition, is amended as follows:

1107.6 Group R. Occupancies in Group R shall be provided with accessible features in accordance with Sections 1107.6.1 through 1107.6.4. Accessible and Type A units shall be apportioned among efficiency dwelling units, single bedroom units and multiple bedroom units, in proportion to the numbers of such units in the building. Accessible hotel guest rooms shall be apportioned among the various classes of sleeping accommodations.

1107.6.1 Group R-1. Group R-1 occupancies shall be provided with accessible features in accordance with Sections 1107.6.1.1 and 1107.6.1.2.

1107.6.1.1 Accessible units. In occupancies in Group R-1, Accessible dwelling units and sleeping units shall be provided in accordance with Table 1107.6.1.1. All facilities on a site shall be considered to determine the total number of Accessible units. Accessible units shall be dispersed among the various classes of units. Roll-in showers provided in Accessible units shall include a permanently mounted folding shower seat.

1107.6.1.2 Type B units. In structures with four or more dwelling or sleeping units intended to be occupied as a residence, every dwelling and sleeping unit intended to be occupied as a residence shall be a Type B unit.

Exception: The number of Type B units is permitted to be reduced in accordance with Section 1107.7.

1107.6.2 Group R-2. Accessible units, Type A units and Type B units shall be provided in occupancies in Group R-2 in accordance with Sections 1107.6.2.1 and 1107.6.2.2.

1107.6.2.1 Apartment houses, monasteries and convents. Type A and Type B units shall be provided in apartment houses, monasteries and convents in accordance with Sections 1107.6.2.1.1 and 1107.6.2.1.2.

ACTING CITY CLERK

1107.6.2.1.1 Type A units. In occupancies in Group R-2 containing more than ((~~20~~)) 10 dwelling units or sleeping units, at least ((~~2~~)) 5 percent, but not less than one, of the units shall be a Type A unit. All units on a site shall be considered to determine the total number of units and the required number of Type A units. Type A units shall be dispersed among the various classes of units.

Exceptions:

1. The number of Type A units is permitted to be reduced in accordance with Section 1107.7.
2. Existing structures on a site shall not contribute to the total number of units on a site.

1107.6.2.1.2 Type B units. Where there are four or more dwelling units or sleeping units intended to be occupied as a residence in a single structure, every dwelling unit and sleeping unit intended to be occupied as a residence shall be a Type B unit.

Exception: The number of Type B units is permitted to be reduced in accordance with Section 1107.7.

1107.6.2.2 Boarding houses, dormitories, fraternity houses and sorority houses. Accessible units and Type B dwelling units shall be provided in boarding houses, dormitories, fraternity houses and sorority houses in accordance with Sections 1107.6.2.2.1 and 1107.6.2.2.2.

1107.6.2.2.1 Accessible units. Accessible dwelling units and sleeping units shall be provided in accordance with Table 1107.6.1.1.

1107.6.2.2.2 Type B units. Where there are four or more dwelling units or sleeping units intended to be occupied as a residence in a single structure, every dwelling unit and every sleeping unit intended to be occupied as a residence shall be a Type B unit.

ACTING CITY CLERK

Exception: The number of Type B units is permitted to be reduced in accordance with Section 1107.7.

1107.6.3 Group R-3. In occupancies in Group R-3 where there are four or more dwelling units or sleeping units intended to be occupied as a residence in a single structure, every dwelling and sleeping unit intended to be occupied as a residence shall be a Type B unit.

Exception: The number of Type B units is permitted to be reduced in accordance with Section 1107.7.

1107.6.4 Group R-4. Group R-4 occupancies shall be provided with accessible features in accordance with Sections 1107.6.4.1 and 1107.6.4.2.

1107.6.4.1 Accessible units. At least one of the dwelling or sleeping units shall be an Accessible unit.

1107.6.4.2 Type B units. In structures with four or more dwelling or sleeping units intended to be occupied as a residence, every dwelling and sleeping unit intended to be occupied as a residence shall be a Type B unit.

Exception: The number of Type B units is permitted to be reduced in accordance with Section 1107.7.

Section 122. A new Subsection 1107.8 and a new Table 1107.8 are added to the Seattle Building Code, 2003 Edition, to read as follows:

1107.8 Transient lodging facilities and Group I-3 occupancies. Transient lodging facilities shall be provided with accessible features in accordance with Sections 1107.8.1 through 1107.8.2.4. Group I-3 occupancies shall be provided with accessible features in accordance with Sections 1107.8.2 through 1107.8.3.

1107.8.1 Accessible beds. In rooms or spaces having more than 25 beds, five percent of the beds shall have a clear floor space complying with ICC A117.1.

ACTING CITY CLERK

1107.8.1.1 Sleeping areas. A clear floor space complying with ICC A117.1 shall be provided on both sides of the accessible bed. The clear floor space shall be positioned for parallel approach to the side of the bed.

Exception: This requirement shall not apply where a single clear floor space complying with ICC A117.1 positioned for parallel approach is provided between two beds.

1107.8.2 Communication features. Communication features complying with ICC A117.1 shall be provided in accordance with Sections 1107.8.2.1 through 1107.8.2.4.

1107.8.2.1 Transient lodging. In transient lodging facilities, sleeping units with accessible communication features shall be provided in accordance with Table 1107.8. Units required to comply with Table 1107.8 shall be dispersed among the various classes of units.

Table 1107.8

DWELLING OR SLEEPING UNITS WITH ACCESSIBLE COMMUNICATION FEATURES

TOTAL NUMBER OF DWELLING OR SLEEPING UNITS PROVIDED	MINIMUM REQUIRED NUMBER OF DWELLING OR SLEEPING UNITS WITH ACCESSIBLE COMMUNICATION FEATURES
1	1
2 TO 25	2
26 TO 50	4
51 TO 75	7
76 TO 100	9
101 TO 150	12
151 TO 200	14
201 TO 300	17
301 TO 400	20
401 TO 500	22
501 TO 1,000	5% of total
1,001 and over	50 plus 3 for each 100 over 1,000

ACTING CITY CLERK

1107.8.2.2 Group I-3. In Group I-3 occupancies at least 2 percent, but no fewer than one of the total number of general holding cells and general housing cells equipped with audible emergency alarm systems and permanently installed telephones within the cell, shall comply with Section 1107.82.3.

1107.8.2.3 Dwelling units and sleeping units. Where dwelling units and sleeping units are altered or added, the requirements of Section 1107.8.2 shall apply only to the units being altered or added until the number of units with accessible communication features complies with the minimum number required for new construction.

1107.8.2.4 Notification devices. Visual notification devices shall be provided to alert room occupants of incoming telephone calls and a door knock or bell. Notification devices shall not be connected to visual alarm signal appliances. Permanently installed telephones shall have volume controls and an electrical outlet complying with ICC A117.1 located within 48 inches (1219 mm) of the telephone to facilitate the use of a TTY.

1107.8.3 Partitions. Solid partitions or security glazing that separates visitors from detainees in Group I-3 occupancies shall provide a method to facilitate voice communication. Such methods are permitted to include, but are not limited to, grilles, slats, talk-through baffles, intercoms or telephone handset devices. The method of communication shall be accessible to individuals who use wheelchairs and individuals who have difficulty bending or stooping. Hand-operable communication devices, if provided, shall comply with Section 1111.3.

Section 123. Subsection 1109.2 of the International Building Code, 2003 Edition, is amended as follows:

ACTING CITY CLERK

1109.2 Toilet and bathing facilities. Toilet rooms and bathing facilities shall be accessible. Where a floor level is not required to be connected by an accessible route, the only toilet rooms or bathing facilities provided within the facility shall not be located on the inaccessible floor. At least one of each type of fixture, element, control or dispenser in each accessible toilet room and bathing facility shall be accessible.

Exceptions:

1. In toilet rooms or bathing facilities accessed only through a private office, not for common or public use, and intended for use by a single occupant, any of the following alternatives are allowed:
    - 1.1. Doors are permitted to swing into the clear floor space provided the door swing can be reversed to meet the requirements in ICC A117.1,
    - 1.2. The height requirements for the water closet in ICC A117.1 are not applicable,
    - 1.3. Grab bars are not required to be installed in a toilet room, provided that reinforcement has been installed in the walls and located so as to permit the installation of such grab bars, and
    - 1.4. The requirement for height, knee and toe clearance shall not apply to a lavatory.
2. This section is not applicable to toilet and bathing facilities that serve dwelling units or sleeping units that are not required to be accessible by Section 1107.
3. Where multiple single-user toilet rooms or bathing facilities are clustered at a single location and contain fixtures in excess of the minimum required number of plumbing fixtures, at least 5 percent, but not less than one room for each use at each cluster, shall be accessible.

ACTING CITY CLERK

4. Toilet room fixtures that are in excess of those required by ((~~the International Plumbing Code~~)) Chapter 29 and that are designated for use by children in day care and primary school occupancies.
5. Where no more than one urinal is provided in a toilet room or bathing facility, the urinal is not required to be accessible.
6. Toilet rooms that are part of critical-care or intensive-care patient sleeping rooms are not required to be accessible.
7. In dwelling units where a separate bathtub and shower are provided in the same room, at least one shall be accessible.

1109.2.1 Unisex toilet and bathing rooms. In assembly and mercantile occupancies, an accessible unisex toilet room shall be provided where an aggregate of six or more male and female water closets is required. In buildings of mixed occupancy, only those water closets required for the assembly or mercantile occupancy shall be used to determine the unisex toilet room requirement. In recreational facilities where separate-sex bathing rooms are provided, an accessible unisex bathing room shall be provided. Fixtures located within unisex toilet and bathing rooms shall be included in determining the number of fixtures provided in an occupancy.

Exception: Where each separate-sex bathing room has only one shower or bathtub fixture, a unisex bathing room is not required.

1109.2.1.1 Standard. Unisex toilet and bathing rooms shall comply with Sections 1109.2.1.2 through 1109.2.1.7 and ICC A117.1.

1109.2.1.2 Unisex toilet rooms. Unisex toilet rooms shall include only one water closet and only one lavatory. A unisex bathing room in accordance with Section 1109.2.1.3 shall be considered a unisex toilet room.

ACTING CITY CLERK

Exception: A urinal is permitted to be provided in addition to the water closet in a unisex toilet room.

1109.2.1.3 Unisex bathing rooms. Unisex bathing rooms shall include only one shower or bathtub fixture. Unisex bathing rooms shall also include one water closet and one lavatory. Where storage facilities are provided for separate-sex bathing rooms, accessible storage facilities shall be provided for unisex bathing rooms.

1109.2.1.4 Location. Unisex toilet and bathing rooms shall be located on an accessible route. Unisex toilet rooms shall be located not more than one story above or below separate-sex toilet rooms. The accessible route from any separate-sex toilet room to a unisex toilet room shall not exceed 500 feet (152 m).

1109.2.1.5 Prohibited location. In passenger transportation facilities and airports, the accessible route from separate-sex toilet rooms to a unisex toilet room shall not pass through security checkpoints.

1109.2.1.6 Clear floor space. Where doors swing into a unisex toilet or bathing room, a clear floor space not less than 30 inches by 48 inches (762 mm by 1219 mm) shall be provided, within the room, beyond the area of the door swing.

1109.2.1.7 Privacy. Doors to unisex toilet and bathing rooms shall be securable from within the room.

1109.2.2 Water closet compartment. Where water closet compartments are provided in a toilet room or bathing facility, at least one wheelchair-accessible compartment shall be provided. Where the combined total water closet compartments and urinals provided in a toilet room or bathing facility is six or more, at least one ambulatory-accessible water closet compartment shall be provided in addition to the wheelchair-accessible compartment. Wheelchair-accessible and ambulatory-accessible compartments shall comply with ICC A117.1.

ACTING CITY CLERK

1109.2.3 Portable toilets and bathing rooms. Where multiple single-user portable toilet or bathing units are clustered at a single location, at least 5 percent, but not less than one toilet unit or bathing unit at each cluster, shall comply with ICC A117.1. Signs containing the International Symbol of Accessibility and complying with ICC A117.1 shall identify accessible portable toilets and bathing units.

Exception: Portable toilet units provided for use exclusively by construction personnel on a construction site.

Section 124. Subsections 1109.5 and 1109.6 of the International Building Code, 2003 Edition, are amended as follows:

1109.5 Drinking fountains. On floors where drinking fountains are provided, at least 50 percent, but not less than one fountain, shall be accessible. At least one fountain shall be mounted at a standard height.

1109.5.1 Water coolers. Where water coolers are provided, at least 50 percent, but not less than one, of such units provided on each floor shall comply with ICC A117.1.

1109.6 Elevators. Passenger elevators on an accessible route shall be accessible and comply with ((~~Section 3001.3.~~)) ICC A117.1. Elevators required to be accessible shall be designed and constructed to comply with Chapter 296-96 of the Washington Administrative Code and Chapter 30.

Section 125. Subsection 1109.9 of the International Building Code, 2003 Edition, is amended as follows:

1109.9 Detectable warnings. Passenger transit platform edges bordering a drop-off and not protected by platform screens or guards shall have a detectable warning. Curb ramps shall have

ACTING CITY CLERK

detectable warnings. Detectable warnings shall extend the full width and depth of the curb ramp.

Exception: Detectable warnings are not required at bus stops.

Section 126. Subsection 1109.12 of the International Building Code, 2003 Edition, is amended as follows:

1109.12 Service facilities. Service facilities shall provide for accessible features in accordance with Sections 1109.12.1 through 1109.12.5.

1109.12.1 Dressing, fitting and locker rooms. Where dressing rooms, fitting rooms or locker rooms are provided, at least 5 percent, but not less than one, of each type of use in each cluster provided shall be accessible.

1109.12.2 Check-out aisles. Where check-out aisles are provided, accessible check-out aisles shall be provided in accordance with Table 1109.12.2. Where check-out aisles serve different functions, at least one accessible check-out aisle shall be provided for each function. Where checkout aisles serve different functions, accessible check-out aisles shall be provided in accordance with Table 1109.12.2 for each function. Where check-out aisles are dispersed throughout the building or facility, accessible check-out aisles shall also be dispersed. Traffic control devices, security devices and turnstiles located in accessible check-out aisles or lanes shall be accessible. Accessible check-out aisles shall be identified by the International Symbol of Accessibility in accordance with ICC A117.1 Section 703.7.2.1.

Exception: Where the area of the selling space is less than 5,000 square feet (465 m^2), only one check-out aisle is required to be accessible.

1109.12.3 Point of sale and service counters. Where counters are provided for sales or distribution of goods or services, at least one of each type provided shall be accessible.

ACTING CITY CLERK

Where such counters are dispersed throughout the building or facility, accessible counters shall also be dispersed.

1109.12.4 Food service lines. Food service lines shall be accessible. Where self-service shelves are provided, at least 50 percent, but not less than one, of each type provided shall be accessible.

1109.12.5 Queue and waiting lines. Queue and waiting lines servicing accessible counters or check-out aisles shall be accessible.

Section 127. Subsection 1109.14 of the International Building Code, 2003 Edition, is amended as follows:

1109.14 Recreational facilities. Recreational facilities shall be provided with accessible features in accordance with Sections 1109.14.1 through 1109.14.3 <u>as required by the Americans with Disabilities Act Accessibility Guidelines</u>.

1109.14.1 Facilities serving a single building. In Group R-2 and R-3 occupancies where recreational facilities are provided serving a single building containing Type A or Type B units, 25 percent, but not less than one, of each type of recreational facility shall be accessible. Every recreational facility of each type on a site shall be considered to determine the total number of each type that is required to be accessible.

1109.14.2 Facilities serving multiple buildings. In Group R-2 and R-3 occupancies on a single site where multiple buildings containing Type A or Type B units are served by recreational facilities, 25 percent, but not less than one, of each type of recreational facility serving each building shall be accessible. The total number of each type of recreational facility that is required to be accessible shall be determined by considering every recreational facility of each type serving each building on the site.

ACTING CITY CLERK

1109.14.3 Other occupancies. All recreational facilities not falling within the purview of Section 1109.14.1 or 1109.14.2 shall be accessible as required by the Americans with Disabilities Ace Accessibility Guidelines.

Section 128. New Subsections 1109.16 through 1109.20 are added to the Seattle Building Code, 2003 Edition, to read as follows:

1109.16 Laundry equipment. Where provided in spaces required to be accessible, washing machines and clothes dryers shall comply with this section.

1109.16.1 Washing machines. Where three or fewer washing machines are provided, at least one shall comply with ICC A117.1. Where more than three washing machines are provided, at least two shall comply with ICC A117.1.

1109.16.2 Clothes dryers. Where three or fewer clothes dryers are provided, at least one shall comply with ICC A117.1. Where more than three clothes dryers are provided, at least two shall comply with ICC A117.1.

1109.17 Depositories, vending machines, change machines and similar equipment. Where provided, at least one of each type of depository, vending machine, change machine and similar equipment shall comply with ICC A117.1.

Exception: Drive-up-only depositories are not required to comply with this section.

1109.18 Mailboxes. Where mailboxes are provided in an interior location, at least 5 percent, but not less than one, of each type shall comply with ICC A117.1. In residential and institutional facilities, where mailboxes are provided for each dwelling unit or sleeping unit, mailboxes complying with ICC A117.1 shall be provided for each unit required to be an Accessible unit.

1109.19 Automatic teller machines and fare machines. Where automatic teller machines or self-service fare vending, collection or adjustment machines are provided, at least one machine

ACTING CITY CLERK

of each type at each location where such machines are provided shall be accessible. Where bins are provided for envelopes, wastepaper or other purposes, at least one of each type shall be accessible.

1109.20 Two-way communication systems. Where two-way communication systems are provided to gain admittance to a building or facility or to restricted areas within a building or facility, the system shall comply with ICC A117.1.

Section 129. New Sections 1111, 1112 and 1113, and a new Table 1111.2 are added to the Seattle Building Code, 2003 Edition, to read as follows:

SECTION 1111

TELEPHONES

1111.1 General. Where coin-operated public pay telephones, coinless public pay telephones, public closed-circuit telephones, courtesy phones or other types of public telephones are provided, accessible public telephones shall be provided in accordance with Sections 1111.2 through 1111.5 for each type of public telephone provided. For purposes of this section, a bank of telephones shall be considered two or more adjacent telephones.

1111.2 Wheelchair-accessible telephones. Where public telephones are provided, wheelchair-accessible telephones complying with ICC A117.1 shall be provided in accordance with Table 1111.2.

TABLE 1111.2
WHEELCHAIR ACCESSIBLE TELEPHONES

NUMBER OF TELEPHONES PROVIDED ON A FLOOR, LEVEL OR EXTERIOR SITE	MINIMUM REQUIRED NUMBER OF WHEELCHAIR-ACCESSIBLE TELEPHONES
1 or more single units	1 per floor, level and exterior site
1 bank	1 per floor, level and exterior site
2 or more banks	1 per bank

1111.3 Volume controls. All public telephones provided shall have volume control complying with ICC A117.1.

ACTING CITY CLERK

1111.4 TTYs. TTYs complying with ICC A117.1 shall be provided in accordance with Sections 1111.4.1 through 1111.4.9.

1111.4.1 Bank requirement. Where four or more public pay telephones are provided at a bank of telephones, at least one public TTY shall be provided at that bank.

Exception: TTYs are not required at banks of telephones located within 200 feet (60 960 mm) of, and on the same floor as, a bank containing a public TTY.

1111.4.2 Floor requirement. Where four or more public pay telephones are provided on a floor of a privately owned building, at least one public TTY shall be provided on that floor. Where at least one public pay telephone is provided on a floor of a publicly owned building, at least one public TTY shall be provided on that floor.

1111.4.3 Building requirement. Where four or more public pay telephones are provided in a privately owned building, at least one public TTY shall be provided in the building. Where at least one public pay telephone is provided in a publicly owned building, at least one public TTY shall be provided in the building.

1111.4.4 Site requirement. Where four or more public pay telephones are provided on a site, at least one public TTY shall be provided on the site.

1111.4.5 Rest stops, emergency road stops, and service plazas. Where a public pay telephone is provided at a public rest stop, emergency road stop or service plaza, at least one public TTY shall be provided.

1111.4.6 Hospitals. Where a public pay telephone is provided in or adjacent to a hospital emergency room, hospital recovery room or hospital waiting room, at least one public TTY shall be provided at each such location.

1111.4.7 Transportation facilities. Transportation facilities shall be provided with TTYs in accordance with Sections 1112.2.5 and E110.2 in addition to the TTYs required by Sections 1111.4.1 through 1111.4.4.

ACTING CITY CLERK

1111.4.8 Detention and correctional facilities. In detention and correctional facilities, where a public pay telephone is provided in a secured area used only by detainees or inmates and security personnel, then at least one TTY shall be provided in at least one secured area.

1111.4.9 Signs. Public TTYs shall be identified by the International Symbol of TTY complying with ICC A117.1. Directional signs indicating the location of the nearest public TTY shall be provided at banks of public pay telephones not containing a public TTY. Additionally, where signs provide direction to public pay telephones, they shall also provide direction to public TTYs. Such signs shall comply with ICC A117.1 and shall include the International Symbol of TTY.

1111.5 Shelves for portable TTYs. Where a bank of telephones in the interior of a building consists of three or more public pay telephones, at least one public pay telephone at the bank shall be provided with a shelf and an electrical outlet in accordance with ICC A117.1.

Exceptions:

1. In secured areas of detention and correctional facilities, if shelves and outlets are prohibited for purposes of security or safety shelves and outlets for TTYs are not required to be provided.
2. The shelf and electrical outlet shall not be required at a bank of telephones with a TTY.

SECTION 1112

TRANSPORTATION FACILITIES AND STATIONS

1112.1 General. Fixed transportation facilities and stations shall comply with the applicable provisions of Sections 1112.2 and 1112.3.

ACTING CITY CLERK

1112.2 New construction. New stations in rapid rail, light rail, commuter rail, intercity rail, high speed rail and other fixed guideway systems shall comply with Sections 1112.2.1 through 1112.2.8.

1112.2.1 Station entrances. Where different entrances to a station serve different transportation fixed routes or groups of fixed routes, at least one entrance serving each group or route shall comply with Section 1104 and ICC A117.1.

1112.2.2 Signs. Signage in fixed transportation facilities and stations shall comply with Sections 1112.2.2.1 through 1112.2.2.3.

1112.2.2.1 Tactile signs. Where signs are provided at entrances to stations identifying the station or the entrance, or both, at least one sign at each entrance shall be tactile. A minimum of one tactile sign identifying the specific station shall be provided on each platform or boarding area. Such signs shall be placed in uniform locations at entrances and on platforms or boarding areas within the transit system to the maximum extent practicable. Tactile signs shall comply with ICC A117.1.

Exceptions:

1. Where the station has no defined entrance but signs are provided, the tactile signs shall be placed in a central location.
2. Signs are not required to be tactile where audible signs are remotely transmitted to hand-held receivers, or are user or proximity actuated.

1112.2.2.2 Identification signs. Stations covered by this section shall have identification signs containing visual characters complying with ICC A117.1. Signs shall be clearly visible and within the sightlines of a standing or sitting passenger from within the train on both sides when not obstructed by another train.

1112.2.2.3 Informational signs. Lists of stations, routes and destinations served by the station which are located on boarding areas, platforms or mezzanines shall provide

ACTING CITY CLERK

visual characters complying with ICC A117.1 Signs covered by this provision shall, to the maximum extent practicable, be placed in uniform locations within the transit system.

1112.2.3 Fare machines. Self-service fare vending, collection and adjustment machines shall comply with ICC A117.1, Section 707. Where self-service fare vending, collection or adjustment machines are provided for the use of the general public, at least one accessible machine of each type provided shall be provided at each accessible point of entry and exit.

1112.2.4 Rail-to-platform height. Station platforms shall be positioned to coordinate with vehicles in accordance with the applicable provisions of 36 CFR, Part 1192. Low-level platforms shall be 8 inches (250 mm) minimum above top of rail.

Exception: Where vehicles are boarded from sidewalks or street level, low-level platforms shall be permitted to be less than 8 inches (250 mm).

1112.2.5 TTYs. Where a public pay telephone is provided in a transit facility (as defined by the Department of Transportation) at least one public TTY complying with ICC A117.1, Section 704.4, shall be provided in the station. In addition, where one or more public pay telephones serve a particular entrance to a transportation facility, at least one TTY telephone complying with ICC A117.1, Section 704.4, shall be provided to serve that entrance.

1112.2.6 Track crossings. Where a circulation path serving boarding platforms crosses tracks, an accessible route complying with ICC A117.1 shall be provided.

Exception: Openings for wheel flanges shall be permitted to be $2^1/_2$ inches (64 mm) maximum.

1112.2.7 Public address systems. Where public address systems convey audible information to the public, the same or equivalent information shall be provided in a visual format.

ACTING CITY CLERK

1112.2.8 Clocks. Where clocks are provided for use by the general public, the clock face shall be uncluttered so that its elements are clearly visible. Hands, numerals and digits shall contrast with the background either light-on-dark or dark-on-light. Where clocks are mounted overhead, numerals and digits shall comply with ICC A117.1, Section 703.4.

1112.3 Existing facilities: key stations. In rapid rail, light rail, commuter rail, intercity rail, high-speed rail and other fixed guideway systems, altered stations and intercity rail and key stations, as defined under criteria established by the Department of Transportation in Subpart C of 49 CFR Part 37, shall comply with Sections 1112.3.1 through 1112.3.3.

1112.3.1 Accessible route. At least one accessible route from an accessible entrance to those areas necessary for use of the transportation system shall be provided. The accessible route shall include the features specified in Section 1112.2, except that escalators shall comply with Section 3005.2.2. Where technical infeasibility in existing stations requires the accessible route to lead from the public way to a paid area of the transit system, an accessible fare collection machine complying with Section 1112.2.3 shall be provided along such accessible route.

1112.3.2 Platform and vehicle floor coordination. Station platforms shall be positioned to coordinate with vehicles in accordance with the applicable provisions of 36 CFR Part 1192. Low-level platforms shall be 8 inches (250 mm) minimum above top of rail.

Exception: Where vehicles are boarded from sidewalks or street level, low-level platforms shall be permitted to be less than 8 inches (250 mm).

1112.3.3 Direct connections. New direct connections to other facilities shall have an accessible route complying with Section 3406.6 from the point of connection to boarding platforms and transportation system elements used by the public. Any elements provided to facilitate future direct connections shall be on an accessible route connecting boarding platforms and transportation system elements used by the public.

ACTING CITY CLERK

SECTION 1113

SIGNAGE

1113.1 Signs. Required accessible portable toilets and bathing facilities shall be identified by the International Symbol of Accessibility.

1113.2 Designations. Interior and exterior signs identifying permanent rooms and spaces shall be tactile. Where pictograms are provided as designations of interior rooms and spaces, the pictograms shall have tactile text descriptors. Signs required to provide tactile characters and pictograms shall comply with ICC A117.1.

Exceptions:

1. Exterior signs that are not located at the door to the space they serve are not required to comply.
2. Building directories, menus, seat and row designations in assembly areas, occupant names, building addresses and company names and logos are not required to comply.
3. Signs in parking facilities are not required to comply.
4. Temporary (seven days or less) signs are not required to comply.

1113.3 Directional and informational signs. Signs that provide direction to, or information about, permanent interior spaces of the site and facilities shall contain visual characters complying with ICC A117.1.

Exception: Building directories, personnel names, company or occupant names and logos, menus and temporary (seven days or less) signs are not required to comply with ICC A117.1.

1113.4 Other signs. Signage indicating special accessibility provisions shall be provided as follows:

ACTING CITY CLERK

1. At bus stops and terminals, signage must be provided in accordance with Appendix Section E108.4.
2. At fixed facilities and stations, signage must be provided in accordance with Sections 1112.2.2 through 1112.2.2.3.
3. At airports, terminal information systems must be provided in accordance with Appendix Section E110.3.

Section 130. Subsection 1203.1 of the International Building Code, 2003 Edition, is amended as follows:

1203.1 General. Buildings shall be provided with natural ventilation in accordance with Section 1203.4, or mechanical ventilation in accordance with the International Mechanical Code <u>and the Washington State Ventilation and Indoor Air Quality Code</u>.

Section 131. Subsections 1203.3 and 1203.4 of the International Building Code, 2003 Edition, are amended as follows:

1203.3 Under-floor ventilation. The space between the bottom of the floor joists and the earth under any building except spaces occupied by a basement or cellar shall be provided with ventilation openings through foundation walls or exterior walls. Such openings shall be placed so as to provide cross ventilation of the under-floor space.

1203.3.1 Openings for under-floor ventilation. The minimum net area of ventilation openings shall not be less than 1 square foot for each 150 square feet (0.67 m^2 for each 100 m^2) of crawl-space area. Ventilation openings shall be covered for their height and width with any of the following materials, provided that the least dimension of the covering shall not exceed $^1/_4$ inch (6 mm):

1. Perforated sheet metal plates not less than 0.070 inch (1.8 mm) thick.

ACTING CITY CLERK

2. Expanded sheet metal plates not less than 0.047 inch (1.2 mm) thick.
3. Cast-iron grills or gratings.
4. Extruded load-bearing vents.
5. Hardware cloth of 0.035 inch (0.89 mm) wire or heavier.
6. Corrosion-resistant wire mesh, with the least dimension not exceeding $^{1}/_{8}$ inch (3.2 mm).

1203.3.2 Exceptions. The following are exceptions to Sections 1203.3 and 1203.3.1:

1. Where warranted by climatic conditions, ventilation openings to the outdoors are not required if ventilation openings to the interior are provided.
2. The total area of ventilation openings is permitted to be reduced to $^{1}/_{1,500}$ of the under-floor area where the ground surface is treated with an approved vapor retarder material and the required openings are placed so as to provide cross ventilation of the space. The installation of operable louvers shall not be prohibited.
3. Ventilation openings are not required where continuously operated mechanical ventilation is provided at a rate of 1.0 cubic foot per minute (cfm) for each 50 square feet (1.02 L/s for each 10 m^2) of crawl-space floor area and the ground surface is covered with an approved vapor retarder.
4. Ventilation openings are not required when the ground surface is covered with an approved vapor retarder, the perimeter walls are insulated and the space is conditioned in accordance with the ((~~*International Energy Conservation Code*~~)) Seattle Energy Code.
5. For buildings in flood hazard areas as established in Section 1612.3, the openings for under-floor ventilation shall be deemed as meeting the flood opening requirements of ASCE 24 provided that the ventilation openings are designed and installed in accordance with ASCE 24.

ACTING CITY CLERK

1203.4 Natural ventilation. For other than Group R Occupancies, ((~~N~~))natural ventilation of an occupied space shall be through windows, doors, louvers or other openings to the outdoors. The operating mechanism for such openings shall be provided with ready access so that the openings are readily controllable by the building occupants. All Group R Occupancies shall comply with the Washington State Ventilation and Indoor Air Quality Code.

1203.4.1 Ventilation area required. The minimum openable area to the outdoors shall be 4 percent of the floor area being ventilated.

1203.4.1.1 Adjoining spaces. Where rooms and spaces without openings to the outdoors are ventilated through an adjoining room, the opening to the adjoining room shall be unobstructed and shall have an area of not less than 8 percent of the floor area of the interior room or space, but not less than 25 square feet (2.3 m^2). The minimum openable area to the outdoors shall be based on the total floor area being ventilated.

Exception: Exterior openings required for ventilation shall be permitted to open into a thermally isolated sunroom addition or patio cover provided that the openable area between the sunroom addition or patio cover and the interior room shall have an area of not less than 8 percent of the floor area of the interior room or space, but not less than 20 square feet (1.86 m^2). The minimum openable area to the outdoors shall be based on the total floor area being ventilated.

1203.4.1.2 Openings below grade. Where openings below grade provide required natural ventilation, the outside horizontal clear space measured perpendicular to the opening shall be one and one-half times the depth of the opening. The depth of the opening shall be measured from the average adjoining ground level to the bottom of the opening.

ACTING CITY CLERK

1203.4.2 Contaminants exhausted. Contaminant sources in naturally ventilated spaces shall be removed in accordance with the *International Mechanical Code* and the *International Fire Code*.

1203.4.2.1 Bathrooms. Rooms containing bathtubs, showers, spas and similar bathing fixtures shall be mechanically ventilated in accordance with the *International Mechanical Code*.

1203.4.3 Openings on yards or courts. Where natural ventilation is to be provided by openings onto yards or courts, such yards or courts shall comply with Section 1206.

Section 132. Section 1204 of the International Building Code, 2003 Edition, is amended as follows:

1204.1 Equipment and systems. Interior spaces intended for human occupancy shall be provided with active or passive space-heating systems capable of maintaining ((~~a minimum~~)) an average indoor temperature of 68°F (20°C) at a point 3 feet (914 mm) above the floor ((~~on the design heating day~~)) when the outside temperature is 24°F.

Exception: Interior spaces where the primary purpose is not associated with human comfort.

See the Seattle Energy Code and Seattle Mechanical Code for further requirements for heating systems.

[W] 1204.2 Use of solid-fuel-burning devices.

1204.2.1 Definitions. For the purposes of this section only, the following definitions apply.

DESIGNATED AREAS are those areas designated by a county to be an urban growth area in Chapter 36.70A RCW and those areas designated by the U.S. Environmental Protection Agency as being in nonattainment for particulate matter.

ACTING CITY CLERK

SUBSTANTIALLY REMODELED means any alteration or restoration of a building exceeding 60 percent of the appraised value of such building within a 12-month period. For the purpose of this section, the appraised value is the estimated cost to replace the building and structure in-kind, based on current replacement costs.

1204.2.2 Primary heating source. Primary heating sources in all new and substantially remodeled buildings in designated areas shall not be dependent upon wood stoves.

1204.2.3 Solid fuel burning devices. No used solid fuel burning device shall be installed in new or existing buildings unless such device is United States Environmental Protection Agency certified or a pellet stove either certified or exempt from certification by the United States Environmental Protection Agency.

EXCEPTION: Antique wood cook stoves and heaters manufactured prior to 1940.

Section 133. Subsection 1205.1 of the International Building Code, 2003 Edition, is amended as follows:

1205.1 General. Every space intended for human occupancy shall be provided with natural light by means of exterior glazed openings in accordance with Section 1205.2. ((~~or~~)) In other than Group R occupancies, such spaces shall be permitted to be provided with artificial light in accordance with Section 1205.3 in lieu of natural light. Exterior glazed openings shall open directly onto a public way or onto a yard or court in accordance with Section 1206.

EXCEPTIONS:

1. Kitchens in Group R Occupancies may be provided with artificial light.
2. In Group R-1 and R-2 occupancies, artificial light may be provided in lieu of natural light in one habitable room in addition to the kitchen provided:

2.1 In Group R-2, the room is limited in size to ten percent of the area of the dwelling unit or 100 square feet (3048 mm), whichever is larger; and

ACTING CITY CLERK

2.2 In sleeping units and dwelling units located less than 75 feet below the lowest level of fire department vehicle access, the room is not used as a sleeping room.

Section 134. Subsection 1205.4 of the International Building Code, 2003 Edition, is amended as follows:

1205.4 Stairway illumination. Stairways within dwelling units and exterior stairways serving a dwelling unit shall have an illumination level on tread runs of not less than 1 foot-candle (11 lux). Stairs in other occupancies shall be governed by Chapter 10.

1205.4.1 Controls. The control for activation of the required stairway lighting shall be in accordance with the ((~~ICC~~)) *Seattle Electrical Code* and the *Seattle Energy Code*.

Section 135. Subsection 1206.3 of the International Building Code, 2003 Edition, is amended as follows:

1206.3 Courts. Courts shall not be less than 3 feet (914 mm) in width. Courts having windows opening on opposite sides shall not be less than 6 feet (1829 mm) in width. Courts shall not be less than 10 feet (3048 mm) in length unless bounded on one end by a public way or yard. For buildings more than two stories in height, the court shall be increased 1 foot (305 mm) in width and 2 feet (310 mm) in length for each additional story. For buildings exceeding 14 stories in height, the required dimensions shall be computed on the basis of 14 stories.

1206.3.1 Court access. Access shall be provided to the bottom of courts for cleaning purposes.

1206.3.2 Air intake. Courts more than two stories in height shall be provided with a horizontal air intake at the bottom not less than 10 square feet (0.93 m^2) in area and leading to the exterior of the building unless abutting a yard or public way.

ACTING CITY CLERK

1206.3.3 Court drainage. The bottom of every court shall be properly graded and drained to a public sewer or other approved disposal system complying with the *((~~International~~))* *Uniform Plumbing Code.*

Section 136. Section 1207 of the International Building Code, 2003 Edition, is amended as follows:

1207.1 Scope. This section shall apply to common interior walls, partitions and floor/ceiling assemblies between adjacent dwelling units or between dwelling units and adjacent public areas such as halls, corridors, stairs or service areas.

1207.2 Air-borne sound. Walls, partitions and floor/ceiling assemblies separating dwelling units from each other or from public or service areas shall have a sound transmission class (STC) of not less than 50 (45 if field tested) for air-borne noise when tested in accordance with ASTM E 90. Penetrations or openings in construction assemblies for piping; electrical devices; recessed cabinets; bathtubs; soffits; or heating, ventilating or exhaust ducts shall be sealed, lined, insulated or otherwise treated to maintain the required ratings. This requirement shall not apply to dwelling unit entrance doors; however, such doors shall be tight fitting to the frame and sill.

EXCEPTION: Dwelling unit or guest room entrance doors from interior corridors and interconnecting doors between separate units shall have perimeter seals and such door assemblies shall have a sound transmission class (STC) rating of not less than 28.

1207.3 Structure-borne sound. Floor/ceiling assemblies between dwelling units or between a dwelling unit and a public or service area within the structure shall have an impact insulation class (IIC) rating of not less than 50 (45 if field tested) when tested in accordance with ASTM E 492.

ACTING CITY CLERK

EXCEPTION: Floor assemblies in the bathrooms of Group R, Division 1 Occupancies are not required to meet the impact insulation class of 50 where structural concrete floor systems are used.

Joints in the perimeter of such separating wall or floor-ceiling assemblies shall be acoustically sealed with a permanent resilient material approved for such purpose. The separating wall or floor-ceiling assembly shall extend completely to and be sealed to another separating assembly or an exterior wall, roof or floor assembly.

Conduits, ducts, pipes and vents within such wall or floor-ceiling assemblies causing vibration shall be reasonably isolated from the building construction at points of support by means of resilient sleeves, mounts or underlayments. All other openings through which such conduits, ducts, pipes or vents pass shall have the excess opening fully sealed with insulative and permanently resilient materials approved for such purpose.

Electrical outlet boxes shall not be placed back-to-back and shall be offset by not less than 12 inches (305 mm) from outlets in the opposite wall surface. The back and sides of boxes shall be sealed with one-eighth-inch resilient sealant and backed by a minimum of 2-inch thick material fiber insulation or approved equivalent.

Metal ventilating and conditioned air ducts which pass between dwelling units shall be fabricated and installed to maintain required sound transmission ratings.

1207.4 Tested Assemblies. Field- or laboratory-tested wall or floor-ceiling designs having an STC or IIC of 50 or more may be used without additional field testing when, in the opinion of the building official, the tested design has not been compromised by flanking paths. Tests may be required by the building official when evidence of compromised separations are noted.

1207.5 Field Testing and Certification. Field testing, when permitted to determine airborne sound transmission or impact sound insulation class, shall be done in accordance with ASTM E 336 or ASTM E 492 under the supervision of an acoustical professional who is experienced in

ACTING CITY CLERK

the field of acoustical testing and engineering and who shall forward certified test results to the building official that minimum sound insulation requirements stated above have been met.

1207.6 Mechanical Equipment Spaces. Spaces or shafts containing air conditioning, refrigeration or ventilating equipment, elevator machinery, or other mechanical equipment shall be separated both vertically and horizontally from adjoining dwelling units or guest rooms by construction designed to provide a minimum STC rating of 50.

1207.7 Sound Transmission Control Systems. Generic systems as listed in GA 600-00 may be accepted where a laboratory test indicates that the requirements of Section 1207 are met by the system.

Note: Design and materials for sound transmission control shall not impair the fire-resistive integrity of separating walls or floor-ceiling assemblies required to be of fire-resistive construction.

Section 137. Section 1208 of the International Building Code, 2003 Edition, is amended as follows:

1208.1 Minimum room widths. Habitable spaces, other than a kitchen, shall not be less than 7 feet (2134 mm) in any plan dimension. Kitchens shall have a clear passageway of not less than 3 feet (914 mm) between counter fronts and appliances or counter fronts and walls.

((~~**1208.2 Minimum ceiling heights.** Occupiable spaces, habitable spaces and corridors shall have a ceiling height of not less than 7 feet 6 inches (2286 mm). Bathrooms, toilet rooms, kitchens, storage rooms and laundry rooms shall be permitted to have a ceiling height of not less than 7 feet (2134 mm).~~

ACTING CITY CLERK

~~**Exceptions:**~~

~~1. In one- and two-family dwellings, beams or girders spaced not less than 4 feet (1219 mm) on center and projecting not more than 6 inches (152 mm) below the required ceiling height.~~

~~2. If any room in a building has a sloped ceiling, the prescribed ceiling height for the room is required in one-half the area thereof. Any portion of the room measuring less than 5 feet (1524 mm) from the finished floor to the ceiling shall not be included in any computation of the minimum area thereof.~~

~~3. Mezzanines constructed in accordance with Section 505.1.~~

~~**1208.2.1 Furred ceiling.** Any room with a furred ceiling shall be required to have the minimum ceiling height in two-thirds of the area thereof, but in no case shall the height of the furred ceiling be less than 7 feet (2134 mm).~~))

1208.2 Minimum ceiling heights. Habitable rooms, hallways, corridors, bathrooms, toilet rooms, laundry rooms and basements shall have a ceiling height of not less than 7 feet (2134 mm). The required height shall be measured from the finished floor to the lowest projection from the ceiling.

EXCEPTIONS: 1. Beams and girders spaced not less than 4 feet (1219 mm) on center may project not more than 6 inches (153 mm) below the required ceiling height.

Interpretation I1208.2: Ducts and architectural features such as soffits and coved ceilings may project not more than 6 inches (153 mm) below the required ceiling height allowed for beams and girders.

2. Ceilings in basements may project to within 6 feet 8 inches (2032 mm) of the finished floor, and beams, girders, ducts or other obstructions may project to within 6 feet 4 inches (1931 mm) of the finished floor.

ACTING CITY CLERK

3. Not more than 50 percent of the required floor area of a room or space is permitted to have a sloped ceiling less than the prescribed height, with no portion of the required floor area less than 5 feet (1524 mm) in height.
4. The ceiling height along an accessible route of travel, as defined in Chapter 11, shall be at least 79 inches (2007 mm), including allowable projections below the minimum ceiling height.

1208.3 Room area. Every dwelling unit shall have at least one common room that shall have not less than 120 square feet (13.9 m^2) of net floor area. Every room which is used for both cooking and living or both living and sleeping quarters shall have a floor area of not less than 130 square feet (12 m^2) if used or intended to be used by only one occupant, or of not less than 150 square feet (14 m^2) if used or intended to be used by more than one occupant. Where more than two persons occupy a room used for sleeping purposes, the required floor area shall be increased at the rate of 50 square feet (4.6 m^2) for each occupant in excess of two. In a dormitory, minimum floor area shall be 60 square feet (5.5 m^2) per single or double bunk and aisles not less than 3 feet (914 mm) in width shall be provided between the sides of bunks and from every bunk to an exit or exit-access doorway. Other habitable rooms shall have a net floor area of not less than 70 square feet (6.5 m^2).

Exception: Every kitchen in a one- and two-family dwelling shall have not less than 50 square feet (4.64 m^2) of gross floor area.

1208.4 Efficiency dwelling units. An efficiency living unit shall conform to the requirements of the code except as modified herein:

1. The unit shall have a living room of not less than 220 square feet (20.4 m) of floor area. An additional 100 square feet (9.3 m) of floor area shall be provided for each occupant of such unit in excess of two.

ACTING CITY CLERK

Interpretation I1208.4: The required square footage may not include built-in equipment which extends from floor to ceiling such as wardrobes, cabinets, kitchen units or fixtures.

2. The unit shall be provided with a separate closet.
3. The unit shall be provided with a kitchen sink, cooking appliance and refrigeration facilities, each having a clear working space of not less than 30 inches (762 mm) in front. Light and ventilation conforming to this code shall be provided.
4. The unit shall be provided with a separate bathroom containing a water closet, lavatory and bathtub or shower.

1208.5 Other Requirements for Dwelling Units. In no dwelling unit or congregate residence shall the only access from a bedroom to a bathroom be through another bedroom.

Kitchens shall be provided with a kitchen sink, hot and cold running water, counter work space, cabinets for storage of cooking utensils and dishes, and stove and refrigerator or adequate space for the installation of the stove and refrigerator. Splash backs and counter tops shall have impervious surfaces.

Section 138. Subsection 1210.5 of the International Building Code, 2003 Edition, is amended as follows:

1210.5 Toilet rooms. No water closet shall be housed in any room or space used for the preparation of food. Toilet rooms shall not open directly, without a door, into a room used for the preparation of food ((~~for service to the public~~)).

Section 139. Section 1301 of the International Building Code, 2003 Edition, is amended as follows:

1301.1 Scope. This chapter governs the design and construction of buildings for energy efficiency.

1301.1.1 Criteria. Buildings shall be designed and constructed in accordance with the ((~~*International Energy Conservation Code*~~)) *Seattle Energy Code*.

Section 140. Subsection 1403.2 of the International Building Code, 2003 Edition, is amended as follows:

1403.2 Weather protection. Exterior walls shall provide the building with a weather-resistant exterior wall envelope. The exterior wall envelope shall include flashing, as described in Section 1405.3. The exterior wall envelope shall be designed and constructed in such a manner as to prevent the accumulation of water within the wall assembly by providing a water-resistive barrier behind the exterior veneer, as described in Section 1404.2 and a means for draining water that enters the assembly to the exterior of the veneer, unless it is determined that penetration of water behind the veneer shall not be detrimental to the building performance. Protection against condensation in the exterior wall assembly shall be provided in accordance with the ((~~*International Energy Conservation Code*~~)) *Seattle Energy Code*.

Exceptions:

1. A weather-resistant exterior wall envelope shall not be required over concrete or masonry walls designed in accordance with Chapters 19 and 21, respectively.
2. Compliance with the requirements for a means of drainage, and the requirements of Sections 1405.2 and 1405.3, shall not be required for an exterior wall envelope that has been demonstrated through testing to resist wind-driven rain, including joints, penetrations and intersections with dissimilar materials, in accordance with ASTM E 331 under the following conditions:
    - 2.1. Exterior wall envelope test assemblies shall include at least one opening, one control joint, one wall/eave interface and one wall sill. All tested

ACTING CITY CLERK

openings and penetrations shall be representative of the intended end-use configuration.

2.2. Exterior wall envelope test assemblies shall be at least 4 feet by 8 feet (1219 mm by 2438 mm) in size.

2.3. Exterior wall envelope assemblies shall be tested at a minimum differential pressure of 6.24 pounds per square foot (psf) (0.297 kN/m^2).

2.4. Exterior wall envelope assemblies shall be subjected to a minimum test exposure duration of 2 hours.

The exterior wall envelope design shall be considered to resist wind-driven rain where the results of testing indicate that water did not penetrate control joints in the exterior wall envelope, joints at the perimeter of openings or intersections of terminations with dissimilar materials.

Section 141. Subsection 1405.10 of the International Building Code, 2003 Edition, is amended as follows:

1405.10 Metal veneers. Veneers of metal shall be fabricated from approved corrosion-resistant materials or shall be protected front and back with porcelain enamel, or otherwise be treated to render the metal resistant to corrosion. Such veneers shall not be less than 0.0149-inch (0.378 mm) nominal thickness sheet steel mounted on wood or metal furring strips or approved sheathing on the wood construction.

1405.10.1 Attachment. Exterior metal veneer shall be securely attached to the supporting masonry or framing members with corrosion-resistant fastenings, metal ties or by other approved devices or methods. The spacing of the fastenings or ties shall not exceed 24 inches (610 mm) either vertically or horizontally, but where units exceed 4 square feet (0.4 m^2) in area there shall be not less than four attachments per unit. The metal attachments

shall have a cross-sectional area not less than provided by W 1.7 wire. Such attachments and their supports shall be capable of resisting a horizontal force in accordance with the wind loads specified in Section 1609, but in no case less than 20 psf (0.958 kg/m^2).

1405.10.2 Weather protection. Metal supports for exterior metal veneer shall be protected by painting, galvanizing or by other equivalent coating or treatment. Wood studs, furring strips or other wood supports for exterior metal veneer shall be approved pressure-treated wood or protected as required in Section 1403.2. Joints and edges exposed to the weather shall be caulked with approved durable waterproofing material or by other approved means to prevent penetration of moisture.

1405.10.3 Backup. Masonry backup shall not be required for metal veneer except as is necessary to meet the fire-resistance requirements of this code.

1405.10.4 Grounding. Grounding of metal veneers on buildings shall comply with the requirements of Chapter 27 and the ((~~ICC~~)) Seattle *Electrical Code.*

Section 142. Subsection 1503.4 of the International Building Code, 2003 Edition, is amended as follows:

[P] 1503.4 Roof drainage. Design and installation of roof drainage systems shall comply with the ((~~*International*~~)) *Uniform Plumbing Code.*

1503.4.1 Gutters. Gutters and leaders placed on the outside of buildings, other than Group R-3 as applicable in Section 101.2, private garages and buildings of Type V construction, shall be of noncombustible material or a minimum of Schedule 40 plastic pipe.

Section 143. Table 1505.1 of the International Building Code, 2003 Edition, is amended as follows:

TABLE 1505.1((~~a~~))[b]
MINIMUM ROOF COVERING CLASSIFICATION FOR TYPES OF CONSTRUCTION

IA	IB	IIA	IIB	IIIA	IIIB	IV	VA	VB

B	B	B	C[c]	B	C[c]	B	B	C[c]

For SI:1 foot = 304.8 mm, 1 square foot = 0.0929 m^2.

((~~a. Unless otherwise required in accordance with the *International Urban Wildland Interface Code* or due to the location of the building within a fire district in accordance with Appendix D.~~))

b. Nonclassified roof coverings shall be permitted on buildings of Group R-3, as applicable in Section 101.2, and Group U occupancies, where there is a minimum fire-separation distance of 6 feet measured from the leading edge of the roof.

c. Buildings that are not more than two stories in height and having not more than 6,000 square feet of projected roof area and where there is a minimum 10-foot fire-separation distance from the leading edge of the roof to a lot line on all sides of the building, except for street fronts or public ways, shall be permitted to have roofs of No. 1 cedar or redwood shakes and No. 1 shingles.

Section 144. Subsection 1603.1 of the International Building Code, 2003 Edition, is amended as follows:

1603.1 General. Construction documents shall show the size, section and relative locations of structural members with floor levels, column centers and offsets ((~~fully~~)) dimensioned. The design loads and other information pertinent to the structural design required by Sections 1603.1.1 through 1603.1.8 shall be clearly indicated on the construction documents for parts of the building or structure.

Exception: Construction documents for buildings constructed in accordance with the conventional light-frame construction provisions of Section 2308 shall indicate the following structural design information:

1 Floor and roof live loads.

2. Ground snow load, *Pg*.

ACTING CITY CLERK

3. Basic wind speed (3-second gust), miles per hour (mph) (km/hr) and wind exposure.
4. Seismic design category and site class.

1603.1.1 Floor live load. The uniformly distributed, concentrated and impact floor live load used in the design shall be indicated for floor areas. Live load reduction of the uniformly distributed floor live loads, if used in the design, shall be indicated.

1603.1.2 Roof live load. The roof live load used in the design shall be indicated for roof areas (Section 1607.11).

1603.1.3 Roof snow load. Where snow load is calculated according to Sections 1608.2 through 1608.9, ((F))the ground snow load, *Pg*, shall be indicated. In areas where the ground snow load, *Pg*, exceeds 10 pounds per square foot (psf) (0.479 kN/m^2), the following additional information shall also be provided, regardless of whether snow loads govern the design of the roof:

1. Flat-roof snow load, P_f.
2. Snow exposure factor, C_e.
3. Snow load importance factor, I_s.
4. Thermal factor, C_t.

1603.1.4 Wind design data. The following information related to wind loads shall be shown, regardless of whether wind loads govern the design of the lateral-force-resisting system of the building:

1. Basic wind speed (3-second gust), miles per hour (km/hr).
2. Wind importance factor, I_W, and building category.
3. Wind exposure, if more than one wind exposure is utilized, the wind exposure and applicable wind direction shall be indicated.
4. The applicable internal pressure coefficient.

ACTING CITY CLERK

5. Components and cladding. The design wind pressures in terms of psf (kN/m^2) to be used for the design of exterior component and cladding materials not specifically designed by the registered design professional.

1603.1.5 Earthquake design data. The following information related to seismic loads shall be shown, regardless of whether seismic loads govern the design of the lateral-force-resisting system of the building:

1. Seismic importance factor, I_E, and seismic use group.
2. Mapped spectral response accelerations S_S and S_1.
3. Site class.
4. Spectral response coefficients S_{DS} and S_{D1}.
5. Seismic design category.
6. Basic seismic-force-resisting system(s).
7. Design base shear.
8. Seismic response coefficient(s), C_S.
9. Response modification factor(s), R.
10. Analysis procedure used.

1603.1.6 Flood load. For buildings located in flood hazard areas as established in Section 1612.3, the following information, referenced to the datum on the community's Flood Insurance Rate Map (FIRM), shall be shown, regardless of whether flood loads govern the design of the building:

1. In flood hazard areas not subject to high-velocity wave action, the elevation of proposed lowest floor, including basement.
2. In flood hazard areas not subject to high-velocity wave action, the elevation to which any nonresidential building will be dry floodproofed.

ACTING CITY CLERK

3. In flood hazard areas subject to high-velocity wave action, the proposed elevation of the bottom of the lowest horizontal structural member of the lowest floor, including basement.

1603.1.7 Special loads. Special loads that are applicable to the design of the building, structure or portions thereof shall be indicated along with the specified section of this code that addresses the special loading condition.

1603.1.8 System and components requiring special inspections for seismic resistance. Construction documents or specifications shall be prepared for those systems and components requiring special inspection for seismic resistance as specified in Section 1707.1 by the registered design professional responsible for their design and shall be submitted for approval in accordance with Section ((~~106.1~~)) 106.5. Reference to seismic standards in lieu of detailed drawings is acceptable.

Section 145. Subsection 1603.3 of the International Building Code, 2003 Edition, is amended as follows:

1603.3 Live loads posted. Where the live loads for which each floor or portion thereof of a commercial or industrial building is or has been designed to exceed ((~~50~~)) 125 psf (((~~2.40 kN/m2~~))) and for all warehouse and storage areas, such design live loads shall be conspicuously posted by the owner in that part of each story in which they apply, using durable signs. It shall be unlawful to remove or deface such notices.

Section 146. Subsection 1605.3 of the International Building Code, 2003 Edition, is amended as follows:

1605.3 Load combinations using allowable stress design.

ACTING CITY CLERK

1605.3.1 Basic load combinations. Where allowable stress design (working stress design), as permitted by this code, is used, structures and portions thereof shall resist the most critical effects resulting from the following combinations of loads:

D **(Equation 16-7)**

$D + L$ **(Equation 16-8)**

$D + L + (L_r \text{ or } S \text{ or } R)$ **(Equation 16-9)**

$D + (W \text{ or } 0.7E) + L + (L_r \text{ or } S \text{ or } R)$ **(Equation 16-10)**

$0.6D + W$ **(Equation 16-11)**

$0.6D + 0.7E$ **(Equation 16-12)**

Exceptions:

1. Crane hook loads need not be combined with roof live load or with more than three-fourths of the snow load or one-half of the wind load.
2. Flat roof snow loads of 30 psf (1.44 kN/m^2) or less need not be combined with seismic loads. Where flat roof snow loads exceed 30 psf (1.44 kN/m^2), 20 percent shall be combined with seismic loads.

1605.3.1.1 Load reduction. It is permitted to multiply the combined effect of two or more variable loads by 0.75 and add to the effect of dead load. The combined load used in design shall not be less than the sum of the effects of dead load and any one of the variable loads. ((~~The 0.7 factor on *E* does not apply for this provision.~~))

Increases in allowable stresses specified in the appropriate materials section of this code or referenced standard shall not be used with the load combinations of Section 1605.3.1 except that a duration of load increase shall be permitted in accordance with Chapter 23.

1605.3.1.2 Other loads. Where F, H, P or T are to be considered in design, the load combinations of Section 2.4.1 of ASCE 7 shall be used. Where F_a is to be considered in design, the load combinations of Section 2.4.2 of ASCE 7 shall be used.

1605.3.2 Alternative basic load combinations. In lieu of the basic load combinations specified in Section 1605.3.1, structures and portions thereof shall be permitted to be

ACTING CITY CLERK

designed for the most critical effects resulting from the following combinations. When using these alternate basic load combinations that include wind or seismic loads, allowable stresses are permitted to be increased or load combinations reduced, where permitted by the material section of this code or referenced standard. Where wind loads are calculated in accordance with Section 1609.6 or Section 6 of ASCE 7, the coefficient ω in the following equations shall be taken as 1.3. For other wind loads ω shall be taken as 1.0.

$D + L + (L_r \text{ or } S \text{ or } R)$ **(Equation 16-13)**

$D + L + (\omega W)$ **(Equation 16-14)**

$D + L + \omega W + S/2$ **(Equation 16-15)**

$D + L + S + \omega W/2$ **(Equation 16-16)**

$D + L + S + E/1.4$ **(Equation 16-17)**

$0.9D + E/1.4$ **(Equation 16-18)**

Exceptions:

1. Crane hook loads need not be combined with roof live load or with more than three-fourths of the snow load or one-half of the wind load.
2. Flat roof snow loads of 30 pounds per square foot (1.44 kN/m^2) or less need not be combined with seismic loads. Where flat roof snow loads exceed 30 psf (1.44 kN/m^2), 20 percent shall be combined with seismic loads.

1605.3.2.1 Other loads. Where *F*, *H*, *P* or *T* are to be considered in design, 1.0 times each applicable load shall be added to the combinations specified in Section 1605.3.2.

Section 147. Table 1607.1 of the International Building Code, 2003 Edition, is amended as follows:

TABLE 1607.1
MINIMUM UNIFORMLY DISTRIBUTED LIVE LOADS AND MINIMUM CONCENTRATED LIVE LOADS((g))

OCCUPANCY OR USE	UNIFORM (psf)	CONCENTRATED (lbs.)
1. Apartments (see residential)	—	—

ACTING CITY CLERK

2. Access floor systems		
Office use	50	2,000
Computer use	100	2,000
3. Armories and drill rooms	150	—
4. Assembly areas and theaters		
Fixed seats (fastened to floor)	60	
Lobbies	100	
Movable seats	100	
Stages and platforms	125	—
Follow spot, projections and control rooms	50	
Catwalks	40	
5. Balconies and decks (exterior) ((~~On one- and two-family residences only, and not exceeding 100 ft.^{2}~~))	((~~100~~))	—
Private balconies and decks accessory to a dwelling unit	40	
Common use balconies and decks generally not accessible to the public	60	
All other balconies and decks	100	
((~~6. Decks~~	~~Same as occupancy served~~[h]	—))
7. Bowling alleys	75	—
8. Canopies[g] and Cornices	60	—
9. Corridors, except as otherwise indicated	100	—
10. Dance halls and ballrooms	100	—
11. Dining rooms and restaurants	100	—
12. Dwellings (see residential)	—	—
13. Elevator machine room grating (on area of 4 in.^{2})	—	300
14. Finish light floor plate construction (on area of 1 in.^{2})	—	200
15. Fire escapes	100	—
On single-family dwellings only	40	
16. Garages (passenger vehicles only)	40	Note a
Trucks and buses	See Section 1607.6	
17. Grandstands (see stadium and arena bleachers)	—	—
18. Gymnasiums, main floors and balconies	100	—
19. Handrails, guards and grab bars	See Section 1607.7	
20. Hospitals		
Operating rooms, laboratories	60	1,000
Private rooms	40	1,000
Wards	40	1,000
Corridors above first floor	80	1,000
21. Hotels (see residential)	—	—

ACTING CITY CLERK

22. Libraries		
Reading rooms	60	1,000
Stack rooms	150[b]	1,000
Corridors above first floor	80	1,000
23. Manufacturing		
Light	125	2,000
Heavy	250	3,000
((~~24. Marquees~~	~~75~~	—))
25. Office buildings		
File and computer rooms shall be designed for heavier loads based on anticipated occupancy		
Lobbies and first-floor corridors	100	2,000
Offices	50	2,000
Corridors above first floor	80	2,000
26. Penal institutions		
Cell blocks	40	—
Corridors	100	
27. Residential		
One- and two-family dwellings		
Uninhabitable attics without storage	10	
Uninhabitable attics with storage	20	—
Habitable attics and sleeping areas	30	
All other areas except balconies and decks	40	
Hotels and multifamily dwellings		
Private rooms and corridors serving them	40	
Public rooms and corridors serving them	100	
28. Reviewing stands, grandstands and bleachers	Note c	—
29. Roofs	See Section 1607.11	
30. Schools		
Classrooms	40	1,000
Corridors above first floor	80	1,000
First-floor corridors	100	1,000
31. Scuttles, skylight ribs and accessible ceilings	—	200
32. Sidewalks, vehicular driveways and yards, subject to trucking	250[d]	8,000[e]
33. Skating rinks	100	—
34. Stadiums and arenas		
Bleachers	100[c]	—
Fixed seats (fastened to floor)	60 [c]	
35. Stairs and exits	100	Note f
One- and two-family dwellings	40	
All other	100	
36. Storage warehouses (shall be designed for heavier loads if required for anticipated storage)		
Light	125	—

ACTING CITY CLERK

Heavy	250	
37. Stores		
Retail		
First floor	100	1,000
Upper floors	75	1,000
Wholesale, all floors	125	1,000
38. Vehicle barriers	See Section 1607.7	
39. Walkways and elevated platforms (other than exitways)	60	—
40. Yards and terraces, pedestrians	100	—

Notes to Table 1607.1

For SI: 1 inch = 25.4 mm, 1 square inch = 645.16 mm^2, 1 pound per square foot = 0.0479 kN/m^2, 1 pound = 0.004448 kN. 1 pound per cubic foot = 16 kg/m^3

a. Floors in garages or portions of buildings used for the storage of motor vehicles shall be designed for the uniformly distributed live loads of Table 1607.1 or the following concentrated loads: (1) for garages restricted to vehicles accommodating not more than nine passengers, 3,000 pounds acting on an area of 4.5 inches by 4.5 inches; (2) for mechanical parking structures without slab or deck which are used for storing passenger vehicles only, 2,250 pounds per wheel.

b. The loading applies to stack room floors that support nonmobile, double-faced library bookstacks, subject to the following limitations:

1. The nominal bookstack unit height shall not exceed 90 inches;

2. The nominal shelf depth shall not exceed 12 inches for each face; and

3. Parallel rows of double-faced bookstacks shall be separated by aisles not less than 36 inches wide.

c. Design in accordance with the ICC *Standard on Bleachers, Folding and Telescopic Seating and Grandstands*.

d. Other uniform loads in accordance with an approved method which contains provisions for truck loadings shall also be considered where appropriate.

e. The concentrated wheel load shall be applied on an area of 20 square inches.

ACTING CITY CLERK

f. Minimum concentrated load on stair treads (on area of 4 square inches) is 300 pounds.

((~~g. Where snow loads occur that are in excess of the design conditions, the structure shall be designed to support the loads due to the increased loads caused by drift buildup or a greater snow design determined by the building official (see Section 1608). For special-purpose roofs, see Section 1607.11.2.2.~~

~~h. See Section 1604.8.3 for decks attached to exterior walls.~~))

g. This loading condition need only be considered for canopies which meet all of the following conditions.

The upper surface is sloped less than 30 degrees from horizontal; and

The canopy is located adjacent to a right of way or assembly area; and

The canopy is located less than 10 feet above the ground at all points, or less than 10 feet below an adjacent roof, or less than 10 feet from operable openings above or adjacent to the level of the canopy.

For other canopies, roof loads as specified in this Chapter shall be applied. Canopy is defined in Section 3105.1.

Section 148. Subsection 1607.11 of the International Building Code, 2003 Edition, is amended as follows:

1607.11 Roof loads. The structural supports of roofs and ((~~marquees~~)) canopies shall be designed to resist wind and, where applicable, snow and earthquake loads, in addition to the dead load of construction and the appropriate live loads as prescribed in this section((~~, or as set forth in Table 1607.1~~)). The live loads acting on a sloping surface shall be assumed to act vertically on the horizontal projection of that surface.

1607.11.1 Distribution of roof loads. Where uniform roof live loads are involved in the design of structural members arranged so as to create continuity, the minimum applied

ACTING CITY CLERK

loads shall be the full dead loads on all spans in combination with the roof live loads on adjacent spans or on alternate spans, whichever produces the greatest effect. See Section 1607.11.2 for minimum roof live loads and Section 1608((~~.5~~)) for ((~~partial~~)) snow loading.

1607.11.2 Minimum roof live loads. Minimum roof loads shall be determined for the specific conditions in accordance with Sections 1607.11.2.1 through 1607.11.2.4.

1607.11.2.1 Flat, pitched and curved roofs. Ordinary flat, pitched and curved roofs shall be designed for the live loads specified in the following equation or other controlling combinations of loads in Section 1605, whichever produces the greater load. In structures where special scaffolding is used as a work surface for workers and materials during maintenance and repair operations, a lower roof load than specified in the following equation shall not be used unless approved by the building official.

Greenhouses shall be designed for a minimum roof live load of 10 psf (0.479 kN/m^2).

$L_r = 20R_1R_2$ **(Equation 16-24)**

where: $12 \leq L_r \leq 20$

For SI: $L_r = 0.96\ R_1\ R_2$

where: $0.58 \leq L_r \leq 0.96$

L_r = Roof live load per square foot (m^2) of horizontal projection in pounds per square foot (kN/m^2).

The reduction factors R_1 and R_2 shall be determined as follows:

$R_1 = 1$ for $A_t \leq 200$ square feet (18.58 m^2) **(Equation 16-25)**

$R_1 = 1.2 - 0.001A_t$ for 200 square feet $< A_t <$ 600 square feet **(Equation 16-26)**

For SI: $1.2 - 0.011A_t$ for 18.58 square meters $< A_t <$ 55.74 square meters

$R_1 = 0.6$ for $A_t \geq 600$ square feet (55.74 m^2) **(Equation 16-27)**

where:

A_t = Tributary area (span length multiplied by effective width) in square feet (m^2) supported by any structural member, and

F = for a sloped roof, the number of inches of rise per foot (for SI: $F = 0.12 \times$ slope, with slope expressed in percentage points), and

F = for an arch or dome, rise-to-span ratio multiplied by 32, and

$R_2 = 1$ for $F \leq 4$ **(Equation 16-28)**

$R_2 = 1.2 - 0.05\ F$ for $4 < F < 12$ **(Equation 16-29)**

$R_2 = 0.6$ for $F \geq 12$ **(Equation 16-30)**

ACTING CITY CLERK

1607.11.2.2 Special-purpose roofs. Roofs used for promenade purposes shall be designed for a minimum live load of 60 psf (2.87 kN/m^2). Roofs used for roof gardens ((~~or assembly purposes~~)) shall be designed for a minimum live load of 100 psf (4.79 kN/m^2). Roofs used for assembly purposes shall be designed for the loads specified in Table 1607.1. Roofs used for other special purposes shall be designed for appropriate loads, as directed or approved by the building official.

1607.11.2.3 Landscaped roofs. Where roofs are to be landscaped, the ((~~uniform design live load in the landscaped area shall be 20 psf (0.958 kN/m^2). The~~)) weight of the landscaping materials shall be considered as dead load and shall be computed on the basis of saturation of the soil.

1607.11.2.4 Awnings and canopies. Awnings and canopies shall be designed for a uniform live load of 5 psf (0.240 kN/m^2) as well as for snow loads and wind loads as specified in Sections 1608 and 1609.

Section 149. Subsection 1608.1 of the International Building Code, 2003 Edition, is amended as follows:

1608.1 General. Design snow loads shall be determined in accordance with Section 7 of ASCE 7, but the design roof load shall not be less than that determined by Section 1607. Roof snow loads are permitted to be assumed to be 25 psf in lieu of compliance with Sections 1608.2 through 1608.9.

Section 150. Subsection 1614.1 of the International Building Code, 2003 Edition, is amended as follows:

1614.1 Scope. Every structure, and portion thereof, shall as a minimum, be designed and constructed to resist the effects of earthquake motions and assigned a seismic design category

ACTING CITY CLERK

as set forth in Section 1616.3. Structures determined to be in Seismic Design Category A need only comply with Section 1616.4.

Exceptions:

1. Structures designed in accordance with the provisions of Sections 9.1 through 9.6, 9.13 and 9.14 of ASCE 7 shall be permitted.
2. Detached one- and two-family dwellings as applicable in Section 101.2 in Seismic Design Categories A, B and C, or located where the mapped short-period spectral response acceleration, S_S, is less than 0.4 g, are exempt from the requirements of Sections 1613 through 1622.
3. The seismic-force-resisting system of wood frame buildings that conform to the provisions of Section 2308 are not required to be analyzed as specified in Section 1616.1.
4. Agricultural storage structures intended only for incidental human occupancy are exempt from the requirements of Sections 1613 through 1623.
5. Structures located where mapped short-period spectral response acceleration, S_S, determined in accordance with Section 1615.1, is less than or equal to 0.15g and where the mapped spectral response acceleration at 1-second period, S_1, determined in accordance with Section 1615.1, is less than or equal to 0.04g shall be categorized as Seismic Design Category A. Seismic Design Category A structures need only comply with Section 1616.4.
6. Structures located where the short-period design spectral response acceleration, S_{DS}, determined in accordance with Section 1615.1, is less than or equal to 0.167g and the design spectral response acceleration at 1-second period, S_{D1}, determined in accordance with Section 1615.1, is less than or equal to 0.067g, shall be

ACTING CITY CLERK

categorized as Seismic Design Category A and need only comply with Section 1616.4.

((~~[EB] **1614.1.1 Additions to existing buildings.** An addition that is structurally independent from an existing structure shall be designed and constructed as required for a new structure in accordance with the seismic requirements for new structures. An addition that is not structurally independent from an existing structure shall be designed and constructed such that the entire structure conforms to the seismic-force resistance requirements for new structures unless the following conditions are satisfied:~~

~~1. The addition conforms with the requirements for new structures,~~

~~2. The addition does not increase the seismic forces in any structural element of the existing structure by more than 5 percent, unless the element has the capacity to resist the increased forces determined in accordance with Sections 1613 through 1622, and~~

~~3. Additions do not decrease the seismic resistance of any structural element of the existing structure by more than 5 percent cumulative since the original construction, unless the element has the capacity to resist the forces determined in accordance with Sections 1613 through 1622.~~

Section 151. Sections 1614.2 and 1614.3 of the International Building Code are repealed.

Section 152. A new Section 1614.6 is added to the Seattle Building Code, 2003 Edition, to read as follows:

1614.6 Predesign Conference. At least 60 days prior to application, the applicant shall arrange a predesign conference with the structural engineer of record and the building official

ACTING CITY CLERK

to review the proposed building structural system when it is not defined Chapter 9 of ASCE 7 or when an alternate procedure is used under the provisions in Section 104.11. It is the purpose of the meeting to obtain conceptual approval from the building official of the proposed structural system and to allow for design based upon the latest state of the art.

Section 153. Subsections 1616.5 and 1616.6 of the International Building Code, 2003 Edition, are amended as follows:

1616.5 Building configuration. Buildings shall be classified as regular or irregular based on the criteria in Section 9.5.2.3 of ASCE 7.

((~~**Exception:** Buildings designed using the simplified analysis procedure in Section 1617.5 shall be classified in accordance with Section 1616.5.1.~~

~~**1616.5.1 Building configuration (for use in the simplified analysis procedure of Section 1617.5).** Buildings designed using the simplified analysis procedure in Section 1617.5 shall be classified as regular or irregular based on the criteria in this section. Such classification shall be based on the plan and vertical configuration. Buildings shall not exceed the limitations of Section 1616.6.1.~~

~~**1616.5.1.1 Plan irregularity.** Buildings having one or more of the features listed in Table 1616.5.1.1 shall be designated as having plan structural irregularity and shall comply with the requirements in the sections referenced in that table.~~

~~**1616.5.1.2 Vertical irregularity.** Buildings having one or more of the features listed in Table 1616.5.1.2 shall be designated as having vertical irregularity and shall comply with the requirements in the sections referenced in that table.~~

~~**Exceptions:**~~

~~1. Structural irregularities of Type 1a, 1b or 2 in Table 1616.5.1.2 do not apply where no story drift ratio under design lateral load is greater than 130~~

ACTING CITY CLERK

~~percent of the story drift ratio of the next story above. Torsional effects need not be considered in the calculation of story drifts for the purpose of this determination. The story drift ratio relationship for the top two stories of the building is not required to be evaluated.~~

~~2. Irregularities of Types 1a, 1b and 2 of Table 1616.5.1.2 are not required to be considered for one-story buildings in any seismic design category or for two-story buildings in Seismic Design Category A, B, C or D.~~))

1616.6 Analysis procedures. A structural analysis conforming to one of the types permitted in Section 9.5.2.5.1 of ASCE 7 ((~~or to the simplified procedure in Section 1617.5~~)) shall be made for all structures. The analysis shall form the basis for determining the seismic forces, E and E_m, to be applied in the load combinations of Section 1605 and shall form the basis for determining the design drift as required by Section 9.5.2.8 of ASCE 7 ((~~or Section 1617.3~~)).

Exception((s)):

((~~1.~~)) Structures assigned to Seismic Design Category A.

((~~2. Design drift need not be evaluated in accordance with Section 1617.3 when the simplified analysis method of Section 1617.5 is used.~~))

Note: ASCE 7 Section 9.5.4 contain a simplified analysis procedure.

((~~**1616.6.1 Simplified analysis.** A simplified analysis, in accordance with Section 1617.5, shall be permitted to be used for any structure in Seismic Use Group I, subject to the following limitations, or a more rigorous analysis shall be made:~~

~~1. Buildings of light-framed construction not exceeding three stories in height, excluding basements.~~

~~2. Buildings of any construction other than light-framed construction, not exceeding two stories in height, excluding basements, with flexible diaphragms at every level as defined in Section 1602.~~))

ACTING CITY CLERK

1616.6.1 Modification of ASCE 7, Section 9.5.6.8. Modify ASCE 7 Section 9.5.6.8 as follows

9.5.6.8 Design Values. The design value for the modal base shear (V_t), each of the story shear, moment and drift quantities, and the deflection at each level shall be determined by combining their modal values as obtained from Sections 9.5.6.6 and 9.5.6.7. The combination shall be carried out by taking the square root of the sum of the squares of each of the modal values or where closely spaced periods in the translational and torsional modes result in significant cross-correlation of the modes, the complete quadratic combination (CQC) method, in accordance with ASCE-4, shall be used.

A base shear (V) shall be calculated using the equivalent lateral force procedure in Section 9.5.5. For the purpose of this calculation, a fundamental period of the structure (T), in seconds, shall not exceed the coefficient for upper limit on the calculated period (C_u) times the approximate fundamental period of the structure (T_a). Where the design value for the modal base shear (V_t) is less than 85% of the calculated base shear (V) using the equivalent lateral force procedure, the design forces shall be multiplied by the following modification factor:

$$0.85 \frac{V}{V_t} \qquad \textbf{(Eq. 9.5.6.8)}$$

Section 154. Tables 1616.5.1.1 and 1616.5.1.2 of the International Building Code, 2003 Edition are repealed.

Section 155. Section 1617 of the International Building Code, 2003 Edition, is amended as follows:

1617.1 Seismic load effect E and E_m. The seismic load effect, E, for use in the basic load combinations of Sections 1605.2 and 1605.3 shall be determined from Section 9.5.2.7 of ASCE

ACTING CITY CLERK

7. The maximum seismic load effect, E_m, for use in the special seismic load combination of Section 1605.4 shall be the special seismic load determined from Section 9.5.2.7.1 of ASCE 7.

((~~**Exception:** For structures designed using the simplified analysis procedure in Section 1617.5, the seismic load effects, E and E_m, shall be determined from Section 1617.1.1.~~))

~~**1617.1.1 Seismic load effects, E and E_m (for use in the simplified analysis procedure of Section 1617.5).** Seismic load effects, E and E_m, for use in the load combinations of Section 1605 for structures designed using the simplified analysis procedure in Section 1617.5 shall be determined as follows.~~

~~**1617.1.1.1 Seismic load effect, E.** Where the effects of gravity and the seismic ground motion are additive, seismic load, E, for use in Equations 16-5, 16-10 and 16-17, shall be defined by Equation 16-50:~~

~~$E = \rho Q_E + 0.2 S_{DS} D$ **(Equation 16-50)**~~

~~where:~~

~~D = The effect of dead load.~~

~~E = The combined effect of horizontal and vertical earthquake-induced forces.~~

~~ρ = A redundancy coefficient obtained in accordance with Section 1617.2.~~

~~Q_E = The effect of horizontal seismic forces.~~

~~S_{DS} = The design spectral response acceleration at short periods obtained from Section 1615.1.3 or 1615.2.5.~~

~~Where the effects of gravity and seismic ground motion counteract, the seismic load, E, for use in Equations 16-6, 16-12 and 16-18 shall be defined by Equation 16-51.~~

~~$E = \rho Q_E - 0.2 S_{DS} D$ **(Equation 16-51)**~~

~~Design shall use the load combinations prescribed in Section 1605.2 for strength or load and resistance factor design methodologies, or Section 1605.3 for allowable stress design methods.~~))

1617.1.1 Modification of ASCE 7, Section 9.5.2.2.2. Modify ASCE 7 Section 9.5.2.2.2 as follows:

9.5.2.2.2 Combinations of framing systems. Different seismic-force-resisting systems are permitted to be combined in accordance with this section.

ACTING CITY CLERK

9.5.2.2.2.1 Combinations in different directions. Different seismic-force-resisting systems are permitted to be used to resist seismic forces along each of the two orthogonal axes of the structure. Where different systems are used, the respective R, C_d and Ω_0 coefficients shall apply to each system, including the limitations on system use contained in Table 9.5.2.2-1.

9.5.2.2.2.2 Combinations in the same direction. When different seismic-force-resisting systems are used in combination to resist seismic forces in the same direction of structural response, other than those combinations considered as dual systems, design shall comply with the requirements of this section.

9.5.2.2.2.2.1 Vertical combinations. The value of the response modification coefficient, R, used for design at any story shall not exceed the lowest value of R that is used in the same direction at any story above that story. Likewise, the value of system overstrength factor, Ω_0 used for design at any story shall not be less than the largest value of Ω_0 that is used in the same direction at any story above that story.

Exceptions:

1. Rooftop structures not exceeding two stories in height and 10% of the total structure weight.
2. Other supported structural systems with a weight equal to or less than 10% of the weight of the structure.
3. Detached one- and two-family dwellings of light-frame construction.
4. The following two-stage equivalent lateral force analysis procedure is permitted to be used for structures having a flexible upper portion above a rigid lower portion, provided that the design of the structure complies with the following:

   4.1 The stiffness of the lower portion must be at least 10 times the stiffness of the upper portion;

ACTING CITY CLERK

4.2 The period of the entire structure shall not be greater than 1.1 times the period of the upper portion considered as a separate structure fixed at the base;

4.3 The flexible upper portion shall be designed as a separate structure using the appropriate values of R and ρ.

4.4 The rigid lower portion shall be designed as a separate structure using the appropriate values of R and ρ. The reactions from the upper portion shall be those determined from the analysis of the upper portion amplified by the ratio of the R/ρ of the upper portion over R/ρ of the lower portion. The ratio shall not be less than 1.0.

9.5.2.2.2.2.2 Horizontal combinations. Where a combination of different structural systems is used to resist lateral forces in the same direction, the value of R used for design in that direction shall not be greater than the least value of R for any of the systems used in that direction.

Exception: For buildings of light frame construction or having flexible diaphragms that are classified as Seismic Use Group I and are two stories or less in height, resisting elements are permitted to be designed using the lease value of R for the different structural systems found in each independent line of resistance. The value of R used for design of diaphragms in such structures shall not be greater than the least value for any of the systems used in that direction.

9.5.2.2.2.2.3 Combination framing detailing requirements. Structure components common to different framing systems used to resist seismic motions in any direction shall be designed using the detailing requirements of Section 9.5.2.6 required by the highest response modification coefficient, R, of the connected framing systems.

((~~**1617.1.1.2 Maximum seismic load effect, E_m.** The maximum seismic load effect, E_m, shall be used in the special seismic load combinations in Section 1605.4.~~

~~Where the effects of the seismic ground motion and gravity loads are additive, seismic load, E_m, for use in Equation 16-19, shall be defined by Equation 16-52.~~

$$\cancel{E_m = \Omega_0 Q_E + 0.2S_{DS}D} \qquad \cancel{\textbf{(Equation 16-52)}}$$

~~Where the effects of the seismic ground and gravity loads counteract, seismic load, E_m, for use in Equation 16-20, shall be defined by Equation 16-53.~~

$$\cancel{Em = \Omega_0 Q_E - 0.2S_{DS}D} \qquad \cancel{\textbf{(Equation 16-53)}}$$

~~where E, Q_E, S_{DS} are as defined above and Ω_0 is the system overstrength factor as given in Table 1617.6.2.~~

~~The term $\Omega_0 Q_E$ need not exceed the maximum force that can be transferred to the element by the other elements of the lateral-force-resisting system.~~

~~Where allowable stress design methodologies are used with the special load combinations of Section 1605.4, design strengths are permitted to be determined using an allowable stress increase of 1.7 and a resistance factor, Φ, of 1.0. This increase shall not be combined with increases in allowable stresses or load combination reductions otherwise permitted by this code or the material reference standard except that combination with the duration of load increases in Chapter 23 is permitted.~~))

1617.2 Redundancy. The provisions given in Section 9.5.2.4 of ASCE 7 shall be used.

((~~**Exception:** Structures designed using the simplified analysis procedure in Section 1617.5 shall use the redundancy provisions in Sections 1617.2.2.~~))

1617.2.1 ASCE 7, Sections 9.5.2.4.2 and 9.5.2.4.3. Modify Sections 9.5.2.4.2 and 9.5.2.4.3 as follows:

9.5.2.4.2 Seismic Design Category D: For structures in Seismic Design Category D, ρ shall be taken as the largest of the values of ρ_x calculated at each story "x" of the structure in accordance with Equation 9.5.2.4.2-1 as follows:

$$\rho_x = 2 - \frac{20}{r_{\max_x}\sqrt{A_x}}$$

ACTING CITY CLERK

where:

$r_{max\,x}$ = The ratio of the design story shear resisted by the single element carrying the most shear force in the story to the total story shear, for a given direction of loading. For braced frames, the value of $r_{max\,x}$ is equal to the lateral force component in the most heavily loaded brace element divided by the story shear. For moment frames, $r_{max\,x}$ shall be taken as the maximum of the sum of the shears in any two adjacent columns in the plane of a moment frame divided by the story shear. For columns common to two bays with moment-resisting connections on opposite sides at the level under consideration, 70 percent of the shear in that column is permitted to be used in the column shear summation. For shear walls, $r_{max\,x}$ shall be taken equal to shear in the most heavily loaded wall or wall pier multiplied by $10/l_w$ (the metric coefficient is $3.3/l_w$), divided by the story shear, where l_w is the wall or wall pier length in feet (m). The value of the ratio of $10/l_w$ need not ((~~to~~)) be greater than 1.0 for buildings of light-framed construction. For dual systems, $r_{max\,x}$ shall be taken as the maximum value defined above, considering all lateral-load-resisting elements in the story. The lateral loads shall be distributed to elements based on relative rigidities considering the interaction of the dual system. For dual systems, the value of ρ need not exceed 80 percent of the value calculated above.

A_x = The floor area in square feet of the diaphragm level immediately above the story.

Calculation of $r_{max\,x}$ need not consider the effects of accidental torsion and any dynamic amplification of torsion required by Section 9.5.5.5.2.

For a story with a flexible diaphragm immediately above, $r_{max\,x}$ shall be permitted to be calculated from an analysis that assumes rigid diaphragm behavior and ρ_x, need not exceed 1.25.

The value of ρ need not exceed 1.5, which is permitted to be used for any structure. The value of ρ shall not be taken as less than 1.0.

ACTING CITY CLERK

Exception: For structures with seismic-force-resisting systems in any direction comprised solely of special moment frames, the seismic-force-resisting system shall be configured such that the value of ρ calculated in accordance with this section does not exceed 1.25. The calculated value of ρ is permitted to exceed this limit when the design story drift, Δ, as determined in Section 9.5.5.7, does not exceed Δ_a/ρ for any story where Δ_a is the allowable story drift from Table 9.5.2.8.

The metric equivalent of Equation 9.5.2.4.2-1 is:

$$\rho_x = 2 - \frac{6.1}{r_{\max_x}\sqrt{A_x}}$$

where: A_x is in square meters.

The value ρ shall be permitted to be taken equal to 1.0 in the following circumstances:

1. When calculating displacements for dynamic amplification of torsion in Section 9.5.5.5.2.
2. When calculating deflections, drifts and seismic shear forces related to Sections 9.5.5.7.1 and 9.5.5.7.2.
3. For design calculations required by Section 9.5.2.6, 9.6 or 9.14.

For structures with vertical combinations of seismic-force-resisting systems, the value of ρ shall be determined independently for each seismic-force-resisting system. The redundancy coefficient of the lower portion shall not be less than the following:

$$\rho_L = \frac{R_L \rho_u}{R_u}$$

where:
$\rho_L = \rho$ of lower portion.
$R_L = R$ of lower portion.
$\rho_u = \rho$ of upper portion.
$R_u = R$ of upper portion.

ACTING CITY CLERK

9.5.2.4.3 Seismic Design Categories E and F. For structures in Seismic Design Categories E and F, the value of ρ shall be calculated as indicated in Section 9.5.2.4.2, above.

Exception: For structures with lateral-force-resisting systems in any direction consisting solely of special moment frames, the lateral-force-resisting system shall be configured such that the value of ρ calculated in accordance with Section 9.5.2.4.2 does not exceed 1.1. The calculated value of ρ is permitted to exceed this limit when the design story drift, Δ, as determined in Section 9.5.5.7, does not exceed Δ_a/ρ for any story where Δ_a is the allowable story drift from Table 9.5.2.8.

((~~1617.2.2 Redundancy (for use in the simplified analysis procedure of Section 1617.5).~~ ~~A redundancy coefficient, ρ, shall be assigned to each structure designed using the simplified analysis procedure in Section 1617.5 in accordance with this section. Buildings shall not exceed the limitations of Section 1616.6.1.~~

~~1617.2.2.1 Seismic Design Category A, B or C.~~ ~~For structures assigned to Seismic Design Category A, B or C (see Section 1616), the value of the redundancy coefficient ρ is 1.0.~~

~~1617.2.2.2 Seismic Design Category D, E or F.~~ ~~For structures in Seismic Design Category D, E or F (see Section 1616), the redundancy coefficient, ρ, shall be taken as the largest of the values of, ρ_i, calculated at each story "i" of the structure in accordance with Equation 16-54, as follows:~~

$$\rho_i = 2 - \frac{20}{r_{\max_i}\sqrt{A_i}}$$ **~~(Equation 16-54)~~**

~~For SI:~~

$$\rho_i = 2 - \frac{6.1}{r_{\max_i}\sqrt{A_i}}$$

~~where:~~

$r_{\max_i}$ ~~= The ratio of the design story shear resisted by the most heavily loaded single element~~

ACTING CITY CLERK

~~in the story to the total story shear, for a given direction of loading.~~

r_{max_i} ~~= For braced frames, the value r_{max_i}, is equal to the horizontal force component in the most heavily loaded brace element divided by the story shear.~~

r_{max_i} ~~= For moment frames, r_{max_i}, shall be taken as the maximum of the sum of the shears in any two adjacent columns in a moment frame divided by the story shear. For columns common to two bays with moment-resisting connections on opposite sides at the level under consideration, it is permitted to use 70 percent of the shear in that column in the column shear summation.~~

r_{max_i} ~~= For shear walls, r_{max_i}, shall be taken as the maximum value of the product of the shear in the wall or wall pier and $10/l_w$ ($3.3/l_w$ for SI), divided by the story shear, where l_w is the length of the wall or wall pier in feet (m). In light-framed construction, the value of the ratio of $10/l_w$ need not be greater than 1.0.~~

r_{max_i} ~~= For dual systems, r_{max_i}, shall be taken as the maximum value defined above, considering all lateral-load-resisting elements in the story. The lateral loads shall be distributed to elements based on relative rigidities considering the interaction of the dual system. For dual systems, the value of r need not exceed 80 percent of the value calculated above.~~

~~A_i = The floor area in square feet of the diaphragm level immediately above the story.~~

~~For a story with a flexible diaphragm immediately above, r_{max_i} shall be permitted to be calculated from an analysis that assumes rigid diaphragm behavior and ρ need not exceed 1.25.~~

~~The value, ρ, shall not be less than 1.0, and need not exceed 1.5.~~

~~Calculation of r_{max_i} need not consider the effects of accidental torsion and any dynamic amplification of torsion required by Section 9.5.5.5.2 of ASCE 7.~~

~~For structures with seismic-force-resisting systems in any direction comprised solely of special moment frames, the seismic-force-resisting system shall be configured such that the~~

ACTING CITY CLERK

~~value of ρ calculated in accordance with this section does not exceed 1.25 for structures assigned to Seismic Design Category D, and does not exceed 1.1 for structures assigned to Seismic Design Category E or F.~~

~~**Exception:** The calculated value of ρ is permitted to exceed these limits when the design story drift, Δ, as determined in Section 1617.5.4, does not exceed Δ_a/ρ for any story where Δ_a is the allowable story drift from Table 1617.3.1.~~

~~The value ρ shall be permitted to be taken equal to 1.0 in the following circumstances:~~

~~1. When calculating displacements for dynamic amplification of torsion in Section 9.5.5.5.2 of ASCE 7.~~

~~2. When calculating deflections, drifts and seismic shear forces related to Sections 9.5.5.7.1 and 9.5.5.7.2 of ASCE 7.~~

~~3. For design calculations required by Section 1620, 1621 or 1622.~~

~~For structures with vertical combinations of seismic-force-resisting systems, the value, ρ, shall be determined independently for each seismic-force-resisting system. The redundancy coefficient of the lower portion shall not be less than the following:~~

$$\rho_L = \frac{R_L \rho_u}{R_u}$$ ~~**(Equation 16-55)**~~

~~where:~~

~~$\rho_L = \rho$ of lower portion.~~

~~$R_L = R$ of lower portion.~~

~~$\rho_u = \rho$ of upper portion.~~

~~$R_u = R$ of upper portion.~~

1617.3 Deflection and drift limits. The provisions given in Section 9.5.2.8 of ASCE 7 shall be used.

ACTING CITY CLERK

~~((**Exception:** Structures designed using the simplified analysis procedure in Section 1617.5 shall meet the provisions in Section 1617.3.1.~~

~~**1617.3.1 Deflection and drift limits (for use in the simplified analysis procedure of Section 1617.5).** The design story drift, Δ, as determined in Section 1617.5.4, shall not exceed the allowable story drift, Δ_a, as obtained from Table 1617.3.1 for any story. All portions of the building shall be designed to act as an integral unit in resisting seismic forces unless separated structurally by a distance sufficient to avoid damaging contact under total deflection as determined in Section 1617.5.4. Buildings shall not exceed the limitations of Section 1616.6.1.~~

~~**1617.4 Equivalent lateral force procedure for seismic design of buildings.** The provisions given in Section 9.5.5 of ASCE 7 shall be used.~~

~~**1617.5 Simplified analysis procedure for seismic design of buildings.** See Section 1616.6.1 for limitations on the use of this procedure. For purposes of this analytical procedure, a building is considered to be fixed at the base.~~

~~**1617.5.1 Seismic base shear.** The seismic base shear, *V*, in a given direction shall be determined in accordance with the following equation:~~

$$V = \frac{1.2 S_{DS}}{R} W \qquad \text{~~(Equation 16-56)~~}$$

~~where:~~

~~S_{DS} = The design elastic response acceleration at short period as determined in accordance with Section 1615.1.3.~~

~~R = The response modification factor from Table 1617.6.2.~~

~~W = The effective seismic weight of the structure, including the total dead load and other loads listed below:~~

~~1. In areas used for storage, a minimum of 25 percent of the reduced floor live load (floor live load in public garages and open parking structures need not be included).~~

~~2. Where an allowance for partition load is included in the floor load design, the actual partition weight or a minimum weight of 10 psf of floor area, whichever is greater (0.48 kN/m²).~~

~~3. Total weight of permanent operating equipment.~~

~~4. 20 percent of flat roof snow load where flat snow load exceeds 30 psf (1.44 kN/m²).~~

~~**1617.5.2 Vertical distribution.** The forces at each level shall be calculated using the following equation:~~

$$F_x = \frac{1.2S_{DS}}{R} W_x \qquad \text{~~(Equation 16-57)~~}$$

~~where:~~

~~w_x = The portion of the effective seismic weight of the structure, W, at Level x.~~

~~**1617.5.3 Horizontal distribution.** Diaphragms constructed of untopped steel decking or wood structural panels or similar light-framed construction are permitted to be considered as flexible.~~

~~**1617.5.4 Design drift.** For the purposes of Sections 1617.3.1 and 1620.4.6, the design story drift, Δ, shall be taken as 1 percent of the story height unless a more exact analysis is provided.~~))

1617.6 Seismic-force-resisting systems. The provisions given in Section 9.5.2.2 of ASCE 7 shall be used except as modified in Section 1617.6.1.

((~~**Exception:** For structures designed using the simplified analysis procedure in Section 1617.5, the provisions of Section 1617.6.2 shall be used.~~))

1617.6.1 Modifications to ASCE 7, Section 9.5.2.2.

1617.6.1.1 ASCE 7, Table 9.5.2.2. Modify Table 9.5.2.2 as follows:

1. Bearing wall systems: Ordinary reinforced masonry shear walls shall use a response modification coefficient of 21/2. Light-framed walls sheathed with wood structural panels rated for shear resistance or steel sheets shall use a response modification coefficient of 6-1/2. Table 1617.6.2 entries for ordinary plain prestressed masonry shear walls, intermediate prestressed masonry shear walls and special prestressed masonry shear walls shall apply.
2. Building frame systems: Ordinary reinforced masonry shear walls shall use a response modification coefficient of 3. Light-framed walls sheathed with wood structural panels rated for shear resistance or steel sheets shall use a response modification coefficient of 7. Table 1617.6.2 entries for ordinary plain prestressed masonry shear walls, intermediate prestressed masonry shear walls and special prestressed masonry shear walls shall apply.
3. Dual systems with intermediate moment frames capable of resisting at least 25 percent of prescribed seismic forces. Special steel concentrically braced frames shall use a deflection amplification factor of 4.
4. The table column titled Detailing Reference Section in Table 1617.6.2 shall apply.

1617.6.1.2 ASCE 7, Section 9.5.2.2.2.1. Modify Section 9.5.2.2.2.1 by adding Exception 3 as follows:

3. The following two-stage static analysis procedure is permitted to be used for structures having a flexible upper portion supported on a rigid lower portion where both portions of the structure considered separately can be classified as being regular, the average story stiffness of the lower portion is at least 10 times the average story stiffness of the upper portion and the period of the entire structure is not greater than 1.1 times the period of the upper portion considered as a separate structure fixed at the base:

ACTING CITY CLERK

3.1. The flexible upper portion shall be designed as a separate structure using the appropriate values of R and ρ.

3.2. The rigid lower portion shall be designed as a separate structure using the appropriate values of R and ρ. The reactions from the upper portion shall be those determined from the analysis of the upper portion amplified by the ratio of the R/ρ of the upper portion over R/ρ of the lower portion. This ratio shall not be less than 1.0.

1617.6.1.3 ASCE 7, Section 9.5.2.2.4.3. Modify Section 9.5.2.2.4.3 by changing exception to read as follows:

Exception: Reinforced concrete frame members not designed as part of the seismic-force-resisting system and slabs shall comply with Section 21.11 of Ref. 9.9-1.

((~~**1617.6.2 Seismic-force-resisting systems (for use in the Simplified analysis procedure of Section 1617.5).** The basic lateral and vertical seismic-force-resisting systems shall conform to one of the types indicated in Table 1617.6.2 subject to the limitations on height indicated in the table based on seismic design category as determined in Section 1616. The appropriate response modification coefficient, R, system overstrength factor, Ω_0, and deflection amplification factor, C_d, indicated in Table 1617.6.2 shall be used in determining the base shear, element design forces and design story drift. For seismic-force-resisting systems not listed in Table 1617.6.2, analytical and test data shall be submitted that establish the dynamic characteristics and demonstrate the lateral-force resistance and energy dissipation capacity to be equivalent to the structural systems listed in Table 1617.6.2 for equivalent response modification coefficient, R, system overstrength coefficient, Ω_0, and deflection amplification factor, C_d, values. Buildings shall not exceed the limitations of Section 1616.6.1.~~

~~**Exception:** Structures assigned to Seismic Design Category A.~~

ACTING CITY CLERK

~~**1617.6.2.1 Dual systems.** For a dual system, the moment frame shall be capable of resisting at least 25 percent of the design forces. The total seismic force resistance is to be provided by the combination of the moment frame and the shear walls or braced frames in proportion to their stiffness.~~

~~**1617.6.2.2 Combination along the same axis.** For other than dual systems and shear wall-frame interactive systems, where a combination of different structural systems is utilized to resist lateral forces in the same direction, the value, *R*, used for design in that direction shall not be greater than the least value for any of the systems utilized in that same direction.~~

~~**Exception:** For light-framed, flexible diaphragm buildings, of Seismic Use Group I and two stories or less in height: Resisting elements are permitted to be designed using the least value of *R* for the different structural systems found on each independent line of resistance. The value of *R* used for design of diaphragms in such structures shall not be greater than the least value for any of the systems utilized in that same direction.~~

~~**1617.6.2.3 Combinations of framing systems.** Where different seismic-force-resisting systems are used along the two orthogonal axes of the structure, the appropriate response modification coefficient, *R*, system overstrength factor, Ω_0, and deflection amplification factor, C_d, indicated in Table 1617.6.2 for each system shall be used.~~

~~**1617.6.2.3.1 Combination framing factor.** The response modification coefficient, *R*, in the direction under consideration at any story shall not exceed the lowest response modification coefficient, *R*, for the seismic-force-resisting system in the same direction considered above that story, excluding penthouses. The system overstrength factor, Ω_0, in the direction under consideration at any story, shall not be less than the largest value of this factor for the seismic-force-resisting system in~~

ACTING CITY CLERK

~~the same direction considered above that story. In structures assigned to Seismic Design Category D, E or F, if a system with a response modification coefficient, *R*, with a value less than five is used as part of the seismic-force-resisting system in any direction of the structure, the lowest such value shall be used for the entire structure.~~

~~**Exceptions:**~~

~~1. Detached one- and two-family dwellings constructed of light framing.~~

~~2. The response modification coefficient, *R*, and system overstrength factor, Ω_0, for supported structural systems with a weight equal to or less than 10 percent of the weight of the structure are permitted to be determined independent of the values of these parameters for the structure as a whole.~~

~~3. The following two-stage static analysis procedure is permitted to be used for structures having a flexible upper portion supported on a rigid lower portion where both portions of the structure considered separately can be classified as being regular, the average story stiffness of the lower portion is at least 10 times the average story stiffness of the upper portion and the period of the entire structure is not greater than 1.1 times the period of the upper portion considered as a separate structure fixed at the base:~~

~~3.1. The flexible upper portion shall be designed as a separate structure using the appropriate values of *R* and ρ.~~

~~3.2. The rigid lower portion shall be designed as a separate structure using the appropriate values of *R* and ρ. The reactions from the upper portion shall be those determined from the analysis of the upper portion amplified by the ratio of, R/ρ, of the upper~~

ACTING CITY CLERK

~~portion over, R/ρ, of the lower portion. This ratio shall not be less than 1.0.~~

~~**1617.6.2.3.2 Combination framing detailing requirements.** The detailing requirements of Section 1620 required by the higher response modification coefficient, *R*, shall be used for structural components common to systems having different response modification coefficients.~~

~~**1617.6.2.4 System limitations for Seismic Design Category D, E or F.** In addition to the system limitation indicated in Table 1617.6.2, structures assigned to Seismic Design Category D, E or F shall be subject to the following.~~

~~**1617.6.2.4.1 Limited building height.** For buildings that have steel braced frames or concrete cast-in-place shear walls, the height limits in Table 1617.6.2 for Seismic Design Category D or E are increased to 240 feet (73 152 mm) and for Seismic Design Category F to 160 feet (48 768 mm) provided that the buildings are configured such that the braced frames or shear walls arranged in any one plane conform to the following:~~

~~1. The braced frames or shear walls in any one plane shall resist no more than 50 percent of the total seismic forces in each direction, neglecting torsional effects.~~

~~2. The seismic force in the braced frames or shear walls in any one plane resulting from torsional effects shall not exceed 20 percent of the total seismic force in the braced frames or shear walls.~~

~~**1617.6.2.4.2 Interaction effects.** Moment resisting frames that are enclosed or adjoined by stiffer elements not considered to be part of the seismic-force-resisting system shall be designed so that the action or failure of those elements will not impair the vertical load and seismic-force-resisting capability of the frame. The design shall consider and provide for the effect of these rigid elements on the~~

ACTING CITY CLERK

~~structural system at deformations corresponding to the design story drift, *Δ*, as determined in Section 1617.5.4. In addition, the effects of these elements shall be considered when determining whether a structure has one or more of the irregularities defined in Section 1616.5.1.~~

~~**1617.6.2.4.3 Deformational compatibility.** Every structural component not included in the seismic-force-resisting system in the direction under consideration shall be designed to be adequate for vertical load-carrying capacity and the induced moments and shears resulting from the design story drift, Δ, as determined in accordance with Section 1617.5.4. Where allowable stress design is used, Δ shall be computed without dividing the earthquake force by 1.4. The moments and shears induced in components that are not included in the seismic-force-resisting system in the direction under consideration shall be calculated including the stiffening effects of adjoining rigid structural and nonstructural elements.~~

~~**Exception:** Reinforced concrete frame members not designed as part of the seismic-force-resisting system and slabs shall comply with Section 21.11 of ACI 318.~~

~~**1617.6.2.4.4 Special moment frames.** A special moment frame that is used but not required by Table 1617.6.2 is permitted to be discontinued and supported by a stiffer system with a lower response modification coefficient, *R*, provided the requirements of Sections 1620.2.3 and 1620.4.1 are met. Where a special moment frame is required by Table 1617.6.2, the frame shall be continuous to the foundation.~~))

Section 156. Table 1617.3.1 of the International Building Code, 2003 Edition is repealed.

ACTING CITY CLERK

Section 157. Table 1617.6.2 of the International Building Code, 2003 Edition is repealed.

Section 158. Subsection 1620.1 of the International Building Code, 2003 Edition, is amended as follows:

1620.1 Structural component design and detailing. The design and detailing of the components of the seismic-force-resisting system shall comply with the requirements of Section 9.5.2.6 of ASCE 7 in addition to the nonseismic requirements of this code except as modified in Sections 1620.1.1, 1620.1.2 and 1620.1.3.

((~~**Exception:** For structures designed using the simplified analysis procedure in Section 1617.5, the provisions of Sections 1620.2 through 1620.5 shall be used.~~))

1620.1.1 ASCE 7, Section 9.5.2.6.2.5. Section 9.5.2.6.2.5 of ASCE 7 shall not apply.

1620.1.2 ASCE 7, Section 9.5.2.6.2.11. Modify ASCE 7, Section 9.5.2.6.2.11, to read as follows:

9.5.2.6.2.11 Elements supporting discontinuous walls or frames. Columns, beams, trusses or slabs supporting discontinuous walls or frames of structures and the connections of the discontinuous element to the supporting member having plan irregularity Type 4 of Table 9.5.2.3.2 or vertical irregularity Type 4 of Table 9.5.2.3.3 shall have the design strength to resist the maximum axial force that can develop in accordance with the special seismic loads of Section 9.5.2.7.1.

Exceptions:

1. The quantity E in Section 9.5.2.7.1 need not exceed the maximum force that can be transmitted to the element by the lateral-force-resisting system at yield.
2. Concrete slabs supporting light-framed walls.

ACTING CITY CLERK

1620.1.3 ASCE 7, Section 9.5.2.6.3. Modify ASCE 7, Section 9.5.2.6.3, to read as follows: 9.5.2.6.3 Seismic Design Category C. Structures assigned to Category C shall conform to the requirements of Section 9.5.2.6.2 for Category B and to the requirements of this section. Structures that have plan structural irregularity Type 1a or 1b of Table 9.5.2.3.2 along both principal plan axes, or plan structural irregularity Type 5 of Table 9.5.2.3.2, shall be analyzed for seismic forces in compliance with Section 9.5.2.5.2.2. When the square root of the sum of the squares method of combining directional effects is used, each term computed shall be assigned the sign that will yield the most conservative result.

The orthogonal combination procedure of Section 9.5.2.5.2.2, Item a, shall be required for any column or wall that forms part of two or more intersecting seismic-force-resisting systems and is subjected to axial load due to seismic forces acting along either principal plan axis equaling or exceeding 20 percent of the axial load design strength of the column or wall.

Section 159. Subsections 1620.2, 1620.3, 1620.4 and 1620.5 of the International Building Code, 2003 Edition are repealed.

Section 160. Subsection 1702 of the International Building Code, 2003 Edition, is amended by amending the definition of "structural observation" as follows:

STRUCTURAL OBSERVATION. The visual observation of the structural system by a registered design professional for general conformance to the approved construction documents at significant construction stages and at completion of the structural system. Structural observation does not include or
waive the responsibility for the inspection required by Section ((~~109~~)) 108, 1704 or other sections of this code.

ACTING CITY CLERK

Section 161. Subsections 1703.1, 1703.2, 1703.3 and 1703.4 of the International Building Code, 2003 Edition, are amended as follows:

1703.1 Approved agency. Whenever tests or certification of any material or fabricated assembly are required by this code, the tests or certification shall be made by an agency approved by the building official to conduct the tests or provide the certification. The building official may establish rules and regulations setting forth conditions and provisions for approval of agencies and for the conduct of any agency so approved. An approved agency shall provide all information as necessary for the building official to determine that the agency meets the applicable requirements. The building official may suspend or revoke approval of an agency upon evidence of failure of the agency to properly conduct any test, certify any material, or to perform any inspection in a manner required by this code.

1703.1.1 Independent. An approved agency shall be objective and competent. The agency shall also disclose possible conflicts of interest so that objectivity can be confirmed.

1703.1.2 Equipment. An approved agency shall have adequate equipment to perform required tests. The equipment shall be periodically calibrated.

1703.1.3 Personnel. An approved agency shall employ experienced personnel educated in conducting, supervising and evaluating tests and/or inspections. Unless otherwise approved by the building official, all special inspectors shall be registered with the Washington Association of Building Officials. A registered civil or structural engineer or registered architect may serve as a special inspector when approved by the building official.

1703.1.4 Approval of tests and inspections. Special inspectors and inspection and testing agencies shall not conduct any inspections or tests until the building official has authorized the inspection or test in writing. The special inspectors or inspection/testing agency approved by the building official may not be changed without obtaining prior approval of the responsible architect/engineer/owner and the building official.

ACTING CITY CLERK

((~~**1703.2 Written approval.** Any material, appliance, equipment, system or method of construction meeting the requirements of this code shall be approved in writing after satisfactory completion of the required tests and submission of required test reports.~~

~~**1703.3 Approved record.** For any material, appliance, equipment, system or method of construction that has been approved, a record of such approval, including the conditions and limitations of the approval, shall be kept on file in the building official's office and shall be open to public inspection at appropriate times.~~))

1703.4 Performance. Specific information consisting of test reports conducted by an approved testing agency in accordance with standards referenced in Chapter 35, or other such information as necessary, shall be provided for the building official to determine that the material meets the applicable code requirements.

1703.4.1 Research and investigation. When required by the building official, ((S))ufficient technical data shall be submitted to the building official to substantiate the proposed use of any material or assembly. If it is determined that the evidence submitted is satisfactory proof of performance for the use intended, the building official shall approve the use of the material or assembly subject to the requirements of this code. The cost offsets, reports and investigations required under these provisions shall be paid by the permit applicant.

1703.4.2 Research reports. Supporting data, where necessary to assist in the approval of materials or assemblies not specifically provided for in this code, shall consist of valid research reports from approved sources.

Section 162. New Subsections 1703.8 and 1703.9 are added to the Seattle Building Code, 2003 Edition, to read as follows:

1703.8 Preconstruction Conference. When required by the building official, the owner or the owner's agent shall arrange a conference with the project contractor, the design team, the special inspection agency and the building official prior to commencing work on any portion of construction requiring special inspection. The intent of the conference is to identify and clarify the special inspection requirements of the project.

1703.9 Revocation of Registration or Approval to Inspect. The building official may revoke, suspend or refuse to renew registration or approval of inspection agencies, special inspectors and non-registered special inspectors, including inspectors registered by the Washington Association of Building Officials. This may be done upon evidence submitted to the building official of incompetence, of willful or negligent failure to observe or report violations of the Seattle Building Code or of any other failure to perform properly and effectively the duties of this document or other duties assumed by an inspection agency or non-registered special inspector.

The inspection agency or special inspector shall be notified in writing of the building official's decision to revoke, suspend or refuse to renew the Certificate or approval to perform inspections. The agency or inspector may request in writing a hearing before the building official for reconsideration of the decision. The request shall be filed with the building official by five o'clock of the fifteenth working day following service of the notice. The hearing shall be held no later than 15 working days from receipt of a written request. After the hearing, the building official shall issue a final decision, in writing, sustaining, modifying or withdrawing the initial decision.

Section 163. Subsections 1704.1 through 1704.4 of the International Building Code, 2003 Edition, are amended as follows:

ACTING CITY CLERK

1704.1 General. Where application is made for construction as described in this section, the owner or the registered design professional in responsible charge acting as the owner's agent shall employ one or more special inspectors to provide inspections during construction on the types of work listed under Section 1704. The building official may require additional special inspectors when the building official determines they are needed due to the magnitude or complexity of the job.

The special inspector shall be a qualified person who shall demonstrate competence, to the satisfaction of the building official, for inspection of the particular type of construction or operation requiring special inspection. Unless otherwise approved by the building official, all special inspectors shall be registered with the Washington Association of Building Officials. These inspections are in addition to the inspections specified in Section ((~~109~~)) 108.

Exceptions:

1. Special inspections are not required for work of a minor nature or as warranted by conditions in the jurisdiction as approved by the building official.
2. Special inspections are not required for building components unless the design involves the practice of professional engineering or architecture as defined by applicable state statutes and regulations governing the professional registration and certification of engineers or architects.
3. Unless otherwise required by the building official, special inspections are not required for occupancies in Group R-3 as applicable in Section 101.2 and occupancies in Group U that are accessory to a residential occupancy including, but not limited to, those listed in Section 312.1.

1704.1.1 Building permit requirement. The permit applicant shall submit a statement of special inspections prepared by the registered design professional in responsible charge or owner in accordance with Section ((~~106.1~~)) 106.5 as a condition for permit issuance. This

ACTING CITY CLERK

statement shall include a complete list of materials and scope of work requiring special inspections by this section, the inspections to be performed and ((~~a list of the individuals,~~)) approved agencies or firms intended to be retained for conducting such inspections.

1704.1.2 Registration of Special Inspectors.

1704.1.2.1. Application for Registration. Criteria for registration of special inspectors shall be established by the building official.

1704.1.2.2 Issuance of Certificate of Registration. When the building official is satisfied that the applicant is qualified, a Certificate of Registration or a Limited Certificate of Registration shall be issued which specifies the types of inspection the applicant has been authorized to perform. Valid registration from the Washington Association of Building Officials may substitute for registration by the building official.

1704.1.2.3 Renewal of Special Inspector's Registration. A Certificate of Registration or Limited Certificate of Registration shall be valid for a period of time to be determined by the building official. Upon application for renewal of a Certificate of Registration, the applicant may be re-examined to ascertain his/her fitness to perform the inspection of the type or types for which the application was made.

1704.1.3 Report requirements. ((~~Special inspectors shall keep records of inspections. The special inspector shall furnish inspection reports to the building official, and to the registered design professional in responsible charge. Reports shall indicate that work inspected was done in conformance to approved construction documents. Discrepancies shall be brought to the immediate attention of the contractor for correction. If the discrepancies are not corrected, the discrepancies shall be brought to the attention of the building official and to the registered design professional in responsible charge prior to the completion of that phase of the work. A final report documenting required special inspections and correction of any discrepancies noted in the inspections shall be submitted~~

CITY CLERK

~~at a point in time agreed upon by the permit applicant and the building official prior to the start of work.~~))

1704.1.3.1 Daily Reports. The registered special inspector shall immediately report all irregularities, substitution of materials and violations to the contractor for correction, then if uncorrected, to the architect or engineer of record and to the building official.

At the conclusion of each inspection, the registered special inspector shall submit a report to the architect, engineer and owner relative to the portion of the work inspected, stating whether the work requiring special inspection was, to the best of his/her knowledge, in conformance with the approved plans and specifications and the applicable workmanship provisions of this code and related standards. The report shall be signed by the special inspector. One copy of the report shall be submitted to the building official by the approved inspection or testing agency no later than one week from the date of the inspection and shall be filed in the records of the agency's office. One copy of the report shall be left at the job site by the special inspector. The special inspector shall also provide, as directed by the building official or by the architect, engineer or owner, such other information as may be required during his/her assigned employment.

1704.1.3.2. Final Report. The inspection/testing agency shall submit a final signed report listing the scope of required inspection and stating whether all work requiring special inspection was, to the best of the agency's knowledge, inspected and reported as specified on permit documents.

1704.1.4 Notification. The owner, or an authorized agent, is responsible for notifying the special inspector when construction activity is scheduled which requires special inspection. If the owner designates another person to notify the special inspector, the owner retains the

responsibility to assure that the special inspections are conducted and required reports submitted to the building official.

The approved testing agency shall notify the building official and the architect, engineer or owner of his/her commencement of inspection of a job and shall specify the type of inspection for which he/she has been engaged. This notification shall be made prior to commencement of inspection.

The approved testing agency shall notify the building official prior to commencement of each day's inspection thereafter.

The building official may require that every request for special inspection be filed at least one working day before the special inspection is desired. The request may be in writing or by telephone at the option of the building official.

1704.1.5 Access to Work. It is the duty of the person requesting any special inspections required by this code to provide access to and means for proper inspection of the work.

1704.1.6 Posting Special Inspection Record. The building official may require that work requiring special inspection not be commenced until the permit holder or his/her agent posts an inspection log in a conspicuous place on the premises. The record shall be posted in a position which allows the special inspector to conveniently enter his/her identification, the date and type of inspection performed. This record shall be maintained there by the permit holder until final approval has been granted by the building official.

1704.1.7 Responsibilities of Special Inspectors.

1704.1.7.1 General. The special inspector is responsible for conducting all special inspections for which he/she was employed and notified and for carrying out the duties of a special inspector as specified in this Section.

ACTING CITY CLERK

1704.1.7.2 Specific Duties. Registered special inspectors are regularly authorized deputies of the building official and are subject to all duties imposed by the building official, in addition to the following:

1. The registered special inspector shall be present during the execution of all assigned work. The registered special inspector shall report to the job sufficiently in advance of construction to become familiar with the plans and to inspect all materials to be used or concealed within the work; and shall inspect the construction, erection, placing, or other use of materials; and shall observe whether there is compliance with the approved design as to all of the foregoing. During the execution of all assigned work, the registered special inspector shall not undertake or engage in any other task or occupation which interferes with the proper performance of his/her inspection duties.
2. The registered special inspector shall not approve the placing of foundation concrete or pile caps prior to the approval of the soil condition or pile driving reports by the engineer who performed the special inspection for the pile installation.
3. The registered special inspector shall be employed only by an approved inspection or testing agency.
4. The registered special inspector shall not inspect work performed, or material supplied, by any contractor, subcontractor, or material vendor with whom the inspector is employed.
5. If any registered special inspector is negligent in the performance of his/her duties, the work may be stopped.

1704.2 Inspection of fabricators. Where fabrication of structural members and assemblies is being performed on the premises of a fabricator's shop, special inspection of the fabricated items shall be required by this section and as required elsewhere in this code.

1704.2.1 Fabrication and implementation procedures. The special inspector shall verify that the fabricator maintains detailed fabrication and quality control procedures that provide a basis for inspection control of the workmanship and the fabricator's ability to conform to approved construction documents and referenced standards. The special inspector shall review the procedures for completeness and adequacy relative to the code requirements for the fabricator's scope of work.

Exception: Special inspections as required by Section 1704.2 shall not be required where the fabricator is approved in accordance with Section 1704.2.2.

1704.2.2 Fabricator approval. Special inspections required by this code are not required where the work is done on the premises of a fabricator registered and approved <u>according to the provisions of this Chapter</u> to perform such work without special inspection. ((~~Approval shall be based upon review of the fabricator's written procedural and quality control manuals and periodic auditing of fabrication practices by an approved special inspection agency. At completion of fabrication, the approved fabricator shall submit a certificate of compliance to the building official stating that the work was performed in accordance with the approved construction documents.~~))

<u>**1704.2.2.1 Application for Registration.** Application for registration as an approved fabricator may be made to the building official by plants engaged in the manufacture of:</u>

<u>1. Prestressed or precast concrete structural products, and premixed concrete.</u>

<u>2. Unit masonry products.</u>

<u>3. Engineered wood products.</u>

<u>4. Prefabricated or assembly-line produced metal products.</u>

ACTING CITY CLERK

5. Other prefabricated products as the building official may, from time to time, designate.

1704.2.2.2 Requirements for Registration. The building official may examine manufacturing plants which submit applications for registration and shall issue certificates of registration when the plants have complied with the following requirements:

1. Develop and submit a detailed fabrication procedural manual reflecting key quality control procedures which will provide a basis for inspection control of the fabricating process.
2. Have the fabricator's quality control capabilities, operation of equipment and personnel as outlined in the fabrication procedural manual verified by an approved inspection or quality control agency.
3. Agree to have periodic plant inspections conducted by an approved inspection or quality control agency to monitor the effectiveness of the quality control program and to allow unannounced audits of the plant by the building official.
4. Agree to require the inspection or quality control agency to notify the building official in writing of any changes to the procedural manual.
5. Agree to submit a Certificate of Compliance when required by the building official that work was performed in accordance with the approved plans and specifications to the building official and to the engineer or architect of record.
6. Pay a registration fee as determined by the building official in accordance with provisions of the Fee Subtitle.

1704.2.2.3 Renewal of Registration. Registration of approved fabricators shall be valid for one year from the date of issuance and shall be subject to renewal annually. Registration may be renewed upon application, contingent on compliance with quality

ACTING CITY CLERK

control procedures during the past year and payment of a fee in accordance with provisions of the Fee Subtitle. The building official may revoke registration for cause.

1704.2.2.4 Fees. Fees for examination and registration of special inspectors shall be as determined by the building official in accordance with the Fee Subtitle.

1704.3 Steel construction. The special inspections for steel elements of buildings and structures shall be as required by Section 1704.3 and Table 1704.3. Where required, special inspection of steel shall also comply with Section 1715.

Exceptions:

1. Special inspection of the steel fabrication process shall not be required where the fabricator does not perform any welding, thermal cutting or heating operation of any kind as part of the fabrication process. ((~~In such cases, the fabricator shall be required to submit a detailed procedure for material control that demonstrates the fabricator's ability to maintain suitable records and procedures such that, at any time during the fabrication process, the material specification, grade and mill test reports for the main stress-carrying elements are capable of being determined.~~))
2. The special inspector need not be continuously present during welding of the following items, provided the materials, welding procedures and qualifications of welders are verified prior to the start of the work; periodic inspections are made of the work in progress and a visual inspection of all welds is made prior to completion or prior to shipment of shop welding.
   - 2.1. Single-pass fillet welds not exceeding 5/16 inch (7.9 mm) in size.
   - 2.2. Floor and roof deck welding.
   - 2.3. Welded studs when used for structural diaphragm.
   - 2.4. Welded sheet steel for cold-formed steel framing members such as studs and joists.

2.5. Welding of stairs and railing systems.

3. Welding done in an approved fabricator's shop, *e.g.* AISC-certified or equivalent.

1704.3.1 Welding. Welding inspection shall be in compliance with AWS D1.1, or AWS D1.3 for cold-formed steel framing. ((~~The basis for welding inspector qualification shall be AWS D1.1.~~))

1704.3.2 Details. The special inspector shall perform an inspection of the steel frame to verify compliance with the details shown on the approved construction documents, such as bracing, stiffening, member locations and proper application of joint details at each connection.

1704.3.3 High-strength bolts. Installation of high-strength bolts shall be periodically inspected in accordance with AISC specifications.

1704.3.3.1 General. While the work is in progress, the special inspector shall determine that the requirements for bolts, nuts, washers and paint; bolted parts and installation and tightening in such standards are met. For bolts requiring pretensioning, the special inspector shall observe the preinstallation testing and calibration procedures when such procedures are required by the installation method or by project plans or specifications; determine that all plies of connected materials have been drawn together and properly snugged and monitor the installation of bolts to verify that the selected procedure for installation is properly used to tighten bolts. For joints required to be tightened only to the snug-tight condition, the special inspector need only verify that the connected materials have been drawn together and properly snugged.

1704.3.3.2 Periodic monitoring. Monitoring of bolt installation for pretensioning is permitted to be performed on a periodic basis when using the turn-of-nut method with matchmarking techniques, the direct tension indicator method or the alternate design

ACTING CITY CLERK

fastener (twist-off bolt) method. Joints designated as snug tight need be inspected only on a periodic basis.

1704.3.3.3 Continuous monitoring. Monitoring of bolt installation for pretensioning using the calibrated wrench method or the turn-of-nut method without matchmarking shall be performed on a continuous basis.

1704.4 Concrete construction. The special inspections and verifications for concrete construction shall be as required by this section and Table 1704.4.

Exception: Special inspections shall not be required for:

1. Isolated spread concrete footings of buildings three stories or less in height that are fully supported on earth or rock.
2. Continuous concrete footings supporting walls of buildings three stories or less in height that are fully supported on earth or rock <u>and the building official finds the work is of a minor nature and no special hazard exists,</u> where:
   2.1. The footings support walls of light frame construction;
   2.2. The footings are designed in accordance with Table 1805.4.2; or
   2.3. The structural design is based on a $f'c$ no greater than 2,500 pounds per square inch (psi) (17.2 Mpa).
3. Nonstructural concrete slabs supported directly on the ground, including prestressed slabs on grade, where the effective prestress in the concrete is less than 150 psi (1.03 Mpa).
4. Concrete foundation walls constructed in accordance with Table 1805.5(1), 1805.5(2), 1805.5(3) or 1805.5(4).
5. Concrete patios, driveways and sidewalks, on grade.

1704.4.1 Materials. In the absence of sufficient data or documentation providing evidence of conformance to quality standards for materials in Chapter 3 of ACI 318, the building

ACTING CITY CLERK

official shall require testing of materials in accordance with the appropriate standards and criteria for the material in Chapter 3 of ACI 318. Weldability of reinforcement, except that which conforms to ASTM A706, shall be determined in accordance with the requirements of Section 1903.5.2.

1704.4.2 Inspection during concrete mixing. Special inspections shall be required during mixing of concrete under one of the following circumstances:

1. Concrete mixes prepared in a batch plant that is not certified by the City of Seattle;
2. All structural lightweight concrete mixes;
3. Concrete mixes with f'_c greater than 6,000 psi;
4. Concrete mixes containing alternative materials addressed in Section 1704.4.1
5. Other unusual circumstances as determined by the building official.

Exception: Inspection during the mixing of concrete shall not be required when the proportions of ingredients are established in accordance with Table 1905.2 or when a mix has been granted continuous approval by the building official.

Section 164. Table 1704.3 of the International Building Code, 2003 Edition, is amended as follows:

TABLE 1704.3

REQUIRED VERIFICATION AND INSPECTION OF STEEL CONSTRUCTION

VERIFICATION AND INSPECTION	CONTINUOUS	PERIODIC	REFERENCED STANDARD[a]	IBC REFERENCE
1. Material verification of high-strength bolts, nuts and washers:				
a. Identification markings to conform to ASTM standards specified in the approved construction documents.	—	X	Applicable ASTM material specifications; AISC 335, Section A3.4; AISC LRFD, Section A3.3	—
b. Manufacturer's certificate	—	X	—	—

of compliance required.				
2.Inspection of high-strength bolting:				
a. Bearing-type connections.	—	X	AISC LRFD Section M2.5	1704.3.3
b. Slip-critical connections.	X	X		
3. Material verification of structural steel:				
a. Identification markings to conform to ASTM standards specified in the approved construction documents.	—	—	ASTM A 6 or ASTM A 568	1708.4
b. Manufacturers' certified mill test reports.	—	—	ASTM A 6 or ASTM A 568	
4. Material verification of weld filler materials:				
a. Identification markings to conform to AWS specification in the approved construction documents.		—	AISC, ASD, Section A3.6; AISC LRFD, Section A3.5	—
b. Manufacturer's certificate of compliance required.	—	—	—	—
5. Inspection of welding: a. Structural steel:	—	—		
1) Complete and partial penetration groove welds.	X	—	AWS D1.1	1704.3.1
2) Multipass fillet welds.	X	—		
3) Single-pass fillet welds > $^5/_{16}$"	X	—		
4) Single-pass fillet welds ≤ $^5/_{16}$"	—	X		
5) Floor and deck welds.	—	X	AWS D1.3	—
b. Reinforcing steel:	—	—	AWS D1.4 ACI 318: 3.5.2	1903.5.2
1) Verification of weldability of reinforcing steel other than ASTM A 706.	—	X		
2) Reinforcing steel-resisting flexural and axial forces in intermediate and special moment frames, and boundary elements of special reinforced concrete shear walls and shear reinforcement.	X	—		
3) Shear reinforcement.	X	—		
4) Other reinforcing steel.	—	X		
c. Cold-formed steel framing	—	X	AWS D1.3	1704.3.1 & 1707.4

6. Inspection of steel frame joint details for compliance with approved construction documents:		X		
a. Details such as bracing and stiffening.	—	—		1704.3.2
b. Member locations.	—	—		
c. Application of joint details at each connection.	—			

For SI:1 inch = 25.4 mm.

a. Where applicable, see also Section 1707.1, Special inspection for seismic resistance.

Section 165. Subsection 1704.11 of the International Building Code, 2003 Edition, is amended as follows:

1704.11 Sprayed fire-resistant materials. Special inspections for sprayed fire-resistant materials applied to structural elements and decks shall be in accordance with Sections 1704.11.1 through 1704.11.5. Special inspections shall be based on the fire-resistance design as designated in the approved construction documents.

1704.11.1 Structural member surface conditions. The surfaces shall be prepared in accordance with the approved fire-resistance design and the approved manufacturer's written instructions. The prepared surface of structural members to be sprayed shall be inspected before the application of the sprayed fire-resistant material.

1704.11.2 Application. The substrate shall have a minimum ambient temperature before and after application as specified in the approved manufacturer's written instructions. ((~~The area for application shall be ventilated during and after application as required by the approved manufacturer's written instructions.~~))

1704.11.3 Thickness. The average thickness of the sprayed fire-resistant materials applied to structural elements shall not be less than the thickness required by the approved fire-resistant design. Individual measured thickness, which exceeds the thickness specified in a

ACTING CITY CLERK

design by 1/4 inch (6.4 mm) or more, shall be recorded as the thickness specified in the design plus 1/4 inch (6.4 mm). For design thicknesses 1 inch (25 mm) or greater, the minimum allowable individual thickness shall be the design thickness minus 1/4 inch (6.4 mm). For design thicknesses less than 1 inch (25 mm), the minimum allowable individual thickness shall be the design thickness minus 25 percent. Thickness shall be determined in accordance with ASTM E 605. Samples of the sprayed fire-resistant materials shall be selected in accordance with Sections 1704.11.3.1 and 1704.11.3.2.

1704.11.3.1 Floor, roof and wall assemblies. The thickness of the sprayed fire-resistant material applied to floor, roof and wall assemblies shall be determined in accordance with ASTM E 605, taking the average of not less than four measurements for each 1,000 square feet ($93m^2$) of the sprayed area on each floor or part thereof.

1704.11.3.2 Structural framing members. The thickness of the sprayed fire-resistant material applied to structural members shall be determined in accordance with ASTM E 605. Thickness testing shall be performed on not less than 25 percent of the structural members on each floor.

1704.11.4 Density. The density of the sprayed fire-resistant material shall not be less than the density specified in the approved fire-resistant design. Density of the sprayed fire-resistant material shall be determined in accordance with ASTM E 605.

1704.11.5 Bond strength. The cohesive/adhesive bond strength of the cured sprayed fire-resistant material applied to structural elements shall not be less than 150 pounds per square foot (psf) (7.18 kN/m^2). The cohesive/adhesive bond strength shall be determined in accordance with the field test specified in ASTM E 736 by testing in-place samples of the sprayed fire-resistant material selected in accordance with Sections 1704.11.5.1 and 1704.11.5.2.

1704.11.5.1 Floor, roof and wall assemblies. The test samples for determining the cohesive/adhesive bond strength of the sprayed fire-resistant materials shall be selected from each floor, roof and wall assembly at the rate of not less than one sample for every 10,000 square feet (929 m^2) or part thereof of the sprayed area in each story.

1704.11.5.2 Structural framing members. The test samples for determining the cohesive/adhesive bond strength of the sprayed fire-resistant materials shall be selected from beams, girders, joists, trusses and columns at the rate of not less than one sample for each type of structural framing member for each 10,000 square feet (929 m^2) of floor area or part thereof in each story.

Section 166. Subsection 1704.12 of the International Building Code, 2003 Edition, is repealed.

Section 167. Subsection 1705.1 of the International Building Code, 2003 Edition, is amended as follows:

1705.1 Scope. A quality assurance plan for seismic requirements shall be provided in accordance with Section 1705.2 for the following:

1. The seismic-force-resisting systems in structures assigned to Seismic Design Category C, D, E or F, in accordance with Section 1616.
2. Designated seismic systems in structures assigned to Seismic Design Category D, E or F.
3. The following additional systems in structures assigned to Seismic Design Category C:
    - 3.1. Heating, ventilating and air-conditioning (HVAC) ductwork containing hazardous materials and anchorage of such ductwork.

ACTING CITY CLERK

3.2. Piping systems and mechanical units containing flammable, combustible or highly toxic materials.

3.3. Anchorage of electrical equipment used for emergency or standby power systems.

4. The following additional systems in structures assigned to Seismic Design Category D:

4.1. Systems required for Seismic Design Category C.

4.2. Exterior wall panels and their anchorage.

4.3. Suspended ceiling systems and their anchorage.

4.4. Access floors and their anchorage.

4.5. Steel storage racks and their anchorage, where the factor, *Ip*, determined in Section 9.6.1.5 of ASCE 7, is equal to 1.5.

5. The following additional systems in structures assigned to Seismic Design Category E or F:

5.1. Systems required for Seismic Design Categories C and D.

5.2. Electrical equipment.

Exceptions:

1. A quality assurance plan is not required for structures designed and constructed in accordance with the conventional construction provisions of Section 2308.
2. A quality assurance plan is not required for structures designed and constructed in accordance with the following:

2.1. The structure is constructed of light wood framing or light framed cold-formed steel; the design spectral response acceleration at short periods, S_{DS}, as determined in Section 1615.1, does not exceed 0.5g, and the height of the structure does not exceed 35 feet (10 668 mm) above grade plane; or

2.2. The structure is constructed using a reinforced masonry structural system or reinforced concrete structural system; the design spectral response acceleration at short periods, S_{DS}, as determined in Section 1615.1, does not exceed 0.5g, and the height of the structure does not exceed 25 feet (7620 mm) above grade plane; or

2.3. The structure is a detached one- or two-family dwelling not exceeding ((~~two~~)) three stories in height; and

2.3.1. The structure is classified as Seismic Use Group I, as determined in Section 1616.2; and

2.3.2. The structure does not have any of the following plan or vertical irregularities as defined in Section 1616.5:

a. Torsional irregularity.

b. Nonparallel systems.

c. Stiffness irregularity–extreme soft story and soft story.

d. Discontinuity in capacity–weak story.

Section 168. Subsection 1707.3 of the International Building Code, 2003 Edition, is amended as follows:

1707.3 Structural wood. Continuous special inspection during field gluing operations of elements of the seismic-force-resisting system. Periodic special inspections for nailing, bolting, anchoring and other fastening of components within the seismic-force-resisting system, including drag struts, braces and hold-downs.

Exceptions:

1. Fastening of wood sheathing used for wood shear walls, shear panels and diaphragms where the fastener spacing is more than 4 inches (102 mm) on center (o.c.).

ACTING CITY CLERK

2. Special inspection is not required for Group R-3 detached structures where fastener spacing is more than 4 inches (102 mm) on center (o.c.) and hold down capacities are less than 5000 pounds.

Section 169. Subsection 1709.1 of the International Building Code, 2003 Edition, is amended as follows:

1709.1 Structural observations. Structural observations shall be provided for those structures included in Seismic Design Category D, E or F, as determined in Section 1616, where one or more of the following conditions exist:

1. The structure is included in Seismic Use Group II or III (Category III or IV according to Table 1604.5),
2. The height of the structure is greater than 75 feet (22 860 mm) above the base,
3. The structure is in Seismic Design Category E and Seismic Use Group I and greater than two stories in height,
4. When so designated by the registered design professional in responsible charge of the design,
5. The structure includes five stories of wood-frame construction,
6. When such observation is specifically required by the building official.

Structural observations shall also be provided for those structures sited where the basic wind speed exceeds 110 mph (49 m/sec) determined from Figure 1609, where one or more of the following conditions exist:

1. The structure is included in Category III or IV according to Table 1604.5.
2. The height of the structure is greater than 75 feet (22 860 mm).
3. When so designated by the registered design professional in responsible charge of the design,

4. When such observation is specifically required by the building official.

The owner shall employ a registered design professional to perform structural observations as defined in Section 1702.

((~~Deficiencies shall be reported in writing to the owner and the building official.~~)) At the conclusion of the work included in the permit, the structural observer shall submit to the building official a written statement that the site visits have been made and identify any reported deficiencies which, to the best of the structural observer's knowledge, have not been resolved.

Section 170. Subsection 1711.1 of the International Building Code, 2003 Edition, is amended as follows:

1711.1 General. In the absence of approved rules or other approved standards, the building official shall make, or cause to be made, the necessary tests and investigations; or the building official shall accept duly authenticated reports from approved agencies in respect to the quality and manner of use of new materials or assemblies as provided for in Section ((~~104.11~~)) 104.14 and 104.15. The cost of all tests and other investigations required under the provisions of this code shall be borne by the permit applicant.

Section 171. Subsection 1801.2 of the International Building Code, 2003 Edition, is amended as follows:

1801.2 Design. Allowable bearing pressures, allowable stresses and design formulas provided in this chapter shall be used with the allowable stress design load combinations specified in Section 1605.3. The quality and design of materials used structurally in excavations, footings and foundations shall conform to the requirements specified in Chapters 16, 19, 21, 22 and 23 of this code. Excavations and fills shall also comply with Chapter 33, the Seattle Stormwater,

ACTING CITY CLERK

Grading and Drainage Control Code (Seattle Municipal Code Title 22), and the Regulations for Environmentally Critical Areas (Seattle Municipal Code Title 25.09).

1801.2.1 Foundation design for seismic overturning. Where the foundation is proportioned using the strength design load combinations of Section 1605.2, the seismic overturning moment need not exceed 75 percent of the value computed from Section 9.5.5.6 of ASCE 7 for the equivalent lateral force method, or Section 1618 for the modal analysis method.

Section 172. Subsection 1802.1 and 1802.2 of the International Building Code, 2003 Edition, are amended as follows:

1802.1 General. Foundation and soils investigations shall be conducted in conformance with Sections 1802.2 through 1802. Where ((~~required by the building official,~~)) the classification and investigation of the soil is required by this code, such analysis shall be made by a registered design professional.

1802.2 Where required. The owner or applicant shall submit a foundation and soils investigation to the building official where required in Sections 1802.2.1 through 1802.2.7.

Exception: The building official need not require a foundation or soils investigation where satisfactory data from adjacent areas is available that demonstrates an investigation is not necessary for any of the conditions in Sections 1802.2.1 through 1802.2.6.

1802.2.1 Questionable soil. Where the ((~~safe-sustaining power~~)) strength characteristics of the soil ((~~is~~)) are in doubt, or where a load-bearing value superior to that specified in this code is claimed, the building official ((~~shall~~)) may require that the necessary investigation be made. Such investigation shall comply with the provisions of Sections 1802.4 through 1802.6.

ACTING CITY CLERK

1802.2.2 Expansive soils. In areas likely to have expansive soil, the building official shall require soil tests to determine where such soils do exist.

1802.2.3 Ground-water table. A subsurface soil investigation shall be performed to determine whether the existing static ground-water table is above or within 5 feet below the elevation of the lowest floor level where such floor is located below the finished ground level adjacent to the foundation.

Exception: A subsurface soil investigation shall not be required where waterproofing is provided in accordance with Section 1807.

1802.2.4 Pile and pier foundations. Pile and pier foundations shall be designed and installed on the basis of a foundation investigation and report as specified in Sections 1802.4 through 1802.6 and Section ((~~1808.2.1~~)) 1808.2.2.

1802.2.5 Rock strata. Where subsurface explorations at the project site indicate variations or doubtful characteristics in the structure of the rock upon which foundations are to be constructed, the building official may require a sufficient number of borings ((~~shall~~)) to be made to a depth of not less than 10 feet below the level of the foundations to provide assurance of the soundness of the foundation bed and its load-bearing capacity.

1802.2.6 Seismic Design Category C. Where a structure is determined to be in Seismic Design Category C in accordance with Section 1616, and where the structure is located in an area known to be a geologic hazard area as defined in the Regulations for Environmentally Critical Areas, a((~~n~~)) soils investigation shall be conducted, and shall include an evaluation of the following potential hazards resulting from earthquake motions: slope instability, liquefaction and surface rupture due to faulting or lateral spreading.

Exception: The building official may waive this evaluation upon receipt of the written opinion of a qualified geotechnical engineer that the building's foundation design adequately addresses liquefaction.

1802.2.6.1 Slope Instability. The potential for soil strength loss due to slope instability shall be evaluated for an earthquake ground motion that, as a minimum, has a 40% probability of exceedance in 50 years. This is achieved by assuming a near crustal event of magnitude 6.5 directly below the site. Peak ground acceleration may be determined based on a site-specific study taking into account soil amplification effects. In the absence of such a study, peak ground acceleration may be assumed equal to 0.2g for the purpose of determining soil strength loss due to slope instability.

1802.2.7 Seismic Design Category D, E or F. Where the structure is determined to be in Seismic Design Category D, E or F, in accordance with Section 1616 and the structure is located in an area known to be a geologic hazard area as defined in the Regulations for Environmentally Critical Areas, or where basement or retaining walls in geologic hazard areas exceed 12 feet in height, the soils investigation requirements for Seismic Design Category C, given in Section 1802.2.6, shall be met, in addition to the following. The investigation shall include:

1. A determination of lateral pressures on basement and retaining walls due to earthquake motions.
2. An assessment of potential consequences of any liquefaction and soil strength loss, including estimation of differential settlement, lateral movement or reduction in foundation soil-bearing capacity, and shall address mitigation measures. Such measures shall be given consideration in the design of the structure and can include, but are not limited to, ground stabilization, selection of appropriate foundation type and depths, selection of appropriate structural systems to accommodate anticipated displacements or any combination of these measures. The potential for liquefaction and soil strength loss shall be evaluated for site peak ground acceleration magnitudes and source characteristics consistent with the design earthquake ground

ACTING CITY CLERK

motions. Peak ground acceleration shall be determined from a site-specific study taking into account soil amplification effects, as specified in Section 1615.2.

Exceptions:

1. A site-specific study need not be performed provided that peak ground acceleration equal to $S_{DS}/2.5$ is used, where S_{DS} is determined in accordance with Section 1615.2.1.
2. A site-specific study need only be performed for one- and two-family dwellings if they are located on Site Class F soils.

Section 173. Subsection 1802.6 of the International Building Code, 2003 Edition, is amended as follows:

1802.6 Reports. The soil classification and design load-bearing capacity shall be shown on the construction document. Where required by the building official, a written report of the investigation shall be submitted that includes, but need not be limited to, the following information:

1. A plot plan showing the location of test borings and/or excavations.
2. A complete record of the soil samples.
3. A record of the soil profile.
4. Elevation of the water table, if encountered.
5. Recommendations for foundation type and design criteria, including but not limited to: bearing capacity of natural or compacted soil; provisions to mitigate the effects of expansive soils; mitigation of the effects of liquefaction, differential settlement and varying soil strength; mitigation of the effects of slope instability; and the effects of adjacent loads.
6. Expected total and differential settlement.

7. Pile and pier foundation information in accordance with Section 1808.2.2.
8. Special design and construction provisions for footings or foundations founded on expansive soils, as necessary.
9. Compacted fill material properties and testing in accordance with Section 1803.5.

Section 174. Subsection 1807.4 of the International Building Code, 2003 Edition, is amended as follows:

1807.4 Subsoil drainage system. Where a hydrostatic pressure condition does not exist, dampproofing shall be provided and a base shall be installed under the floor and a drain installed around the foundation perimeter. A subsoil drainage system designed and constructed in accordance with Section 1807.1.3 shall be deemed adequate for lowering the ground-water table.

1807.4.1 Floor base course. Floors of basements, except as provided for in Section 1807.1.1, shall be placed over a floor base course not less than 4 inches (102 mm) in thickness that consists of gravel or crushed stone containing not more than 10 percent of material that passes through a No. 4 (4.75 mm) sieve.

Exception: Where a site is located in well-drained gravel or sand/gravel mixture soils, a floor base course is not required.

1807.4.2 Foundation drain. A drain shall be placed around the perimeter of a foundation that consists of gravel or crushed stone containing not more than 10-percent material that passes through a No. 4 (4.75 mm) sieve. The drain shall extend a minimum of 12 inches (305 mm) beyond the outside edge of the footing. The thickness shall be such that the bottom of the drain is not higher than the bottom of the base under the floor, and that the top of the drain is not less than 6 inches (152 mm) above the top of the footing. The top of the drain shall be covered with an approved filter membrane material. Where a drain tile or

perforated pipe is used, the invert of the pipe or tile shall not be higher than the floor elevation. The top of joints or the top of perforations shall be protected with an approved filter membrane material. The pipe or tile shall be placed on not less than 2 inches (51 mm) of gravel or crushed stone complying with Section 1807.4.1, and shall be covered with not less than 6 inches (152 mm) of the same material.

1807.4.3 Drainage discharge. The floor base and foundation perimeter drain shall discharge by gravity or mechanical means into an approved drainage system that complies with the ((~~*International*~~)) *Uniform Plumbing Code.*

Exception: Where a site is located in well-drained gravel or sand/gravel mixture soils, a dedicated drainage system is not required.

Section 175. A new subsection 1813 is added to the Seattle Building Code, 2003 Edition, to read as follows:

SECTION 1813

METHANE REDUCTION MEASURES

1813.1 Applicability. This section applies to all construction activities on or within 1,000 feet (305 m) of an active, closed or abandoned landfill that has been identified by the building official to be generating levels of methane gas on-site at the lower explosive limits or greater levels. The distance shall be calculated from the location of the proposed structure to the nearest property line of the active or former landfill site. The building official may waive these requirements if technical studies demonstrate that dangerous amounts of methane are not present on the site.

1813.2 Protection of Structures. All enclosed structures to be built within the 1,000 foot (305 m) landfill zone must be protected from potential methane migration. The method for insuring a structure's protection from methane shall be addressed in a report prepared by a

ACTING CITY CLERK

licensed civil engineer and submitted by the applicant to the department for approval. The report shall contain a description of the investigation and recommendations for preventing the accumulation of explosive concentrations of methane gas within or under enclosed portions of the building or structure. At the time of final inspection, the civil engineer shall furnish a signed statement attesting that, to the best of the engineer's knowledge, the building or structure has been constructed in accordance with the recommendations for addressing methane gas migration.

Section 176. Subsections 1905.1 and 1905.2 of the International Building Code, 2003 Edition, are amended as follows:

1905.1 General. The required strength and durability of concrete shall be determined by compliance with the proportioning, testing, mixing and placing provisions of Sections 1905.1.1 through 1905.13.

1905.1.1 Strength. Concrete shall be proportioned to provide an average compressive strength as prescribed in Section 1905.3, and shall satisfy the durability criteria of Section 1904. Concrete shall be produced to minimize the frequency of strengths below f'_c as prescribed in Section 1905.6.3.3. For concrete designed and constructed in accordance with this chapter, f'_c shall not be less than ((~~2,500~~)) 2,000 psi (((~~17.22~~)) 13.79 Mpa). No maximum specified compressive strength shall apply unless restricted by a specific provision of this code or ACI 318.

1905.1.2 Cylinder tests. Requirements for f'_c shall be based on tests of cylinders made and tested as prescribed in Section 1905.6.3.

1905.1.3 Basis of f'_c. Unless otherwise specified, f'_c shall be based on 28-day tests. If other than 28 days, test age for f'_c shall be as indicated in construction documents.

CITY CLERK

1905.1.4 Lightweight aggregate concrete. Where design criteria in ACI 318, Sections 9.5.2.3, 11.2 and 12.2.4, provide for use of a splitting tensile strength value of concrete (f_{ct}), laboratory tests shall be made in accordance with ASTM C 330 to establish the value of f_{ct} corresponding to the specified value of f'_c.

1905.1.5 Field acceptance. Splitting tensile strength tests shall not be used as a basis for field acceptance of concrete.

1905.2 Selection of concrete proportions. Concrete proportions shall be determined in accordance with the provisions of Sections 1905.2.1 through 1905.2.3.

1905.2.1 General. Proportions of materials for concrete shall be established to provide:

1. Workability and consistency to permit concrete to be worked readily into forms and around reinforcement under the conditions of placement to be employed, without segregation or excessive bleeding.
2. Resistance to special exposures as required by Section 1904.
3. Conformance with the strength test requirements of Section 1905.6.

1905.2.2 Different materials. Where different materials are to be used for different portions of proposed work, each combination shall be evaluated.

1905.2.3 Basis of proportions. Concrete proportions shall be established according to Table 1905.2. Table 1905.2 shall be used only for concrete to be made with cements meeting strength requirements for Type I, II, or III of ASTM C 150, and shall not be applied to concrete containing lightweight aggregates. When approved by the building official, Table 1905.2 may be used with air-entraining admixtures (conforming to ASTM C260) and/or normal-range water-reducing admixtures (conforming to ASTM C494, Types A, D or E).

For strengths greater than 4000 psi, proportions shall be established on the basis of field experience and trial mixtures according to Section 1905.3. When approved by the building official, ((~~C~~))concrete proportions ((~~shall~~)) may be established in accordance with Section

ACTING CITY CLERK

1905.3 or Section 1905.4, and shall comply with the applicable requirements of Section 1904.

Section 177. A new Table 1905.2 is added to the Seattle Building Code, 2003 Edition, to read as follows:

TABLE 1905.2—MINIMUM PERMISSIBLE CEMENT CONTENT FOR CONCRETE (WHEN STRENGTH DATA FROM TRIAL BATCHES OR FIELD EXPERIENCE ARE NOT AVAILABLE)

Specified 28-day Compressive Strength in psi (f'_c)	Minimum Permissible Cement Content in Pounds/cu. yd.	Minimum Permissible Cement Content in Std. 94-lb. Sacks/cu. yd.
2000	423	4-1/2[1]
2500	470	5[1]
3000	517	5-1/2
4000[2]	611	6-1/2

Mixes shall be proportioned to produce a five-inch or less slump. No more than a one-inch plus tolerance shall be allowed.

[1]Where special inspection is not required under Section 1704, the minimum permissible cement content shall be increased 1/2 sack per cubic yard of concrete.

[2]For strengths above 4000 p.s.i., see Section 1905.2.3.

Section 178. Subsection 2104.1 of the International Building Code, 2003 Edition, is amended as follows:

2104.1 Masonry construction. Masonry construction shall comply with the requirements of Sections 2104.1.1 through 2104.5 and with ACI 530.1/ASCE 6/TMS 602.

2104.1.1 Tolerances. Masonry, except masonry veneer, shall be constructed within the tolerances specified in ACI 530.1/ASCE 6/TMS 602.

2104.1.2 Placing mortar and units. Placement of mortar and units shall comply with Sections 2104.1.2.1 through 2104.1.2.5.

ACTING CITY CLERK

2104.1.2.1 Bed and head joints. Unless otherwise required or indicated on the construction documents, head and bed joints shall be $^3/_8$ inch (9.5 mm) thick, except that the thickness of the bed joint of the starting course placed over foundations shall not be less than $^1/_4$ inch (6.4 mm) and not more than $^3/_4$ inch (19.1 mm).

2104.1.2.1.1 Open-end units. Open-end units with beveled ends shall be fully grouted. Head joints of open-end units with beveled ends need not be mortared. The beveled ends shall form a grout key that permits grouts within $^5/_8$ inch (15.9 mm) of the face of the unit. The units shall be tightly butted to prevent leakage of the grout.

2104.1.2.2 Hollow units. Hollow units shall be placed such that face shells of bed joints are fully mortared. Webs shall be fully mortared in all courses of piers, columns, pilasters, in the starting course on foundations where adjacent cells or cavities are to be grouted, and where otherwise required. Head joints shall be mortared a minimum distance from each face equal to the face shell thickness of the unit.

2104.1.2.3 Solid units. Unless otherwise required or indicated on the construction documents, solid units shall be placed in fully mortared bed and head joints. The ends of the units shall be completely buttered. Head joints shall not be filled by slushing with mortar. Head joints shall be constructed by shoving mortar tight against the adjoining unit. Bed joints shall not be furrowed deep enough to produce voids.

2104.1.2.4 Glass unit masonry. Glass units shall be placed so head and bed joints are filled solidly. Mortar shall not be furrowed.

Unless otherwise required, head and bed joints of glass unit masonry shall be $^1/_4$ inch (6.4 mm) thick, except that vertical joint thickness of radial panels shall not be less than $^1/_8$ inch (3.2 mm). The bed joint thickness tolerance shall be minus $^1/_{16}$ inch (1.6 mm) and plus $^1/_8$ inch (3.2 mm). The head joint thickness tolerance shall be plus or minus $^1/_8$ inch (3.2 mm).

ACTING CITY CLERK

2104.1.2.5 All units. Units shall be placed while the mortar is soft and plastic. Any unit disturbed to the extent that the initial bond is broken after initial positioning shall be removed and relaid in fresh mortar.

2104.1.3 Installation of wall ties. The ends of wall ties shall be embedded in mortar joints. Wall tie ends shall engage outer face shells of hollow units by at least $^1/_2$ inch (12.7 mm). Wire wall ties shall be embedded at least $1^1/_2$ inches (38 mm) into the mortar bed of solid masonry units or solid-grouted hollow units. Wall ties shall not be bent after being embedded in grout or mortar.

2104.1.4 Chases and recesses. Chases and recesses shall be constructed as masonry units are laid. Masonry directly above chases or recesses wider than 12 inches (305 mm) shall be supported on lintels.

2104.1.5 Lintels. The design for lintels shall be in accordance with the masonry design provisions of either Section 2107 or 2108. Minimum length of end support shall be 4 inches (102 mm).

2104.1.6 Support on wood. Masonry shall not be supported on wood girders or other forms of wood construction except as permitted in Section 2304.12.

2104.1.7 Masonry protection. The top of unfinished masonry work shall be covered to protect the masonry from the weather.

2104.1.8 Weep holes. Weep holes provided in the outside wythe of masonry walls shall be at a maximum spacing of 33 inches (838 mm) on center (o.c.). Weep holes shall not be less than $^3/_{16}$ inch (4.8 mm) in diameter.

2104.1.9 Grout construction joint. Between grout pours, a horizontal construction joint shall be formed by stopping all wythes at the same elevation and with the grout stopping a minimum of 1 ½ inches (38 mm) below a mortar joint, except at the top of the wall. Where

ACTING CITY CLERK

bond beams occur, the grout pour shall be stopped a minimum of ½ inch (12.7 mm) below the top of the masonry.

Section 179. Subsection 2304.12 of the International Building Code, 2003 Edition, is amended as follows:

2304.12 Wood supporting masonry or concrete. Wood members shall not be used to permanently support the dead load of any masonry or concrete.

Exceptions:

1. Masonry or concrete nonstructural floor or roof surfacing not more than 4 inches (102 mm) thick is permitted to be supported by wood members. Precast concrete structural stair treads may be supported by wood stringers.
2. Any structure is permitted to rest upon wood piles constructed in accordance with the requirements of Chapter 18.
3. Veneer of brick, concrete or stone applied as specified in Section 1405.5 having an installed weight of 40 pounds per square foot (psf) (1.9 kN/m^2) or less is permitted to be supported by an approved treated wood foundation when the maximum height of veneer does not exceed 30 feet (9144 mm) above the foundation. Such veneer used as an interior wall finish is permitted to be supported on wood floor construction. The wood floor construction shall be designed to support the additional weight of the veneer plus any other loads and to limit the deflection and shrinkage to $^1/_{600}$ of the span of the supporting members.
4. Glass unit masonry having an installed weight of 20 psf (0.96 kN/m^2) or less is permitted to be installed in accordance with the provisions of Section 2110. The wood construction supporting the glass unit masonry shall be designed for dead and

live loads to limit deflection and shrinkage to $^{1}/_{600}$ of the span of the supporting members.

Section 180. Subsection 2305.1 of the International Building Code, 2003 Edition, is amended as follows:

2305.1 General. Structures using wood shear walls and diaphragms to resist wind, seismic and other lateral loads shall be designed and constructed in accordance with the provisions of this section.

2305.1.1 Shear resistance based on principles of mechanics. Shear resistance of diaphragms and shear walls are permitted to be calculated by principles of mechanics using values of fastener strength and sheathing shear resistance.

2305.1.2 Framing. Boundary elements shall be provided to transmit tension and compression forces. Perimeter members at openings shall be provided and shall be detailed to distribute the shearing stresses. Diaphragm and shear wall sheathing shall not be used to splice boundary elements. Diaphragm chords and collectors shall be placed in, or tangent to, the plane of the diaphragm framing unless it can be demonstrated that the moments, shears and deformations, considering eccentricities resulting from other configurations can be tolerated without exceeding the adjusted resistance and drift limits.

2305.1.2.1 Framing members. Framing members shall be at least 2 inch (51 mm) nominal width. In general, adjoining panel edges shall bear and be attached to the framing members and butt along their centerlines. Nails shall be placed not less than $^{3}/_{8}$ inch (9.5 mm) from the panel edge, not more than 12 inches (305 mm) apart along intermediate supports, and 6 inches (152 mm) along panel edge bearings, and shall be firmly driven into the framing members.

ACTING CITY CLERK

2305.1.3 Openings in shear panels. Openings in shear panels that materially affect their strength shall be fully detailed on the plans, and shall have their edges adequately reinforced to transfer all shearing stresses.

2305.1.4 Shear panel connections. Positive connections and anchorages, capable of resisting the design forces, shall be provided between the shear panel and the attached components. In Seismic Design Category D, E or F, toenails shall not be used to transfer lateral forces in excess of 150 pounds per foot (2189 N/m) from diaphragms to shear walls, drag struts (collectors) or other elements, or from shear walls to other elements.

2305.1.5 Wood members resisting horizontal seismic forces contributed by masonry and concrete. Wood shear walls, diaphragms, horizontal trusses and other members shall not be used to resist horizontal seismic forces contributed by masonry or concrete construction in structures over one story in height.

Exceptions:

1. Wood floor and roof members are permitted to be used in horizontal trusses and diaphragms to resist horizontal seismic forces contributed by masonry or concrete ((~~construction (including those due to masonry veneer, fireplaces and chimneys)~~))) walls provided such forces do not result in torsional force distribution through the truss or diaphragm.
2. Wood structural panel sheathed shear walls are permitted to be used to provide resistance to seismic forces contributed by masonry or concrete ((~~construction~~)) walls, in two-story structures of masonry or concrete construction, provided the following requirements are met:
    2.1. Story-to-story wall heights shall not exceed 12 feet (3658 mm).

2.2. Diaphragms shall not be designed to transmit lateral forces by rotation. Diaphragms shall not cantilever past the outermost supporting shear wall.

2.3. Combined deflections of diaphragms and shear walls shall not permit story drift of supported masonry or concrete walls to exceed the limit of Section 1617.3.

2.4. Wood structural panel sheathing in diaphragms shall have unsupported edges blocked. Wood structural panel sheathing for both stories of shear walls shall have unsupported edges blocked and, for the lower story, shall have a minimum thickness of $^{15}/_{32}$ inch (11.9 mm).

2.5. There shall be no out-of-plane horizontal offsets between the first and second stories of wood structural panel shear walls.

2305.1.6 Wood members resisting seismic forces from non-structural concrete or masonry. Wood members shall be permitted to resist horizontal seismic forces from non-structural concrete, masonry veneer, concrete floors or chimneys.

Section 181. Table 2306.4.1 of the International Building Code, 2003 Edition, is amended as follows:

ACTING CITY CLERK

TABLE 2306.4.1
ALLOWABLE SHEAR (POUNDS PER FOOT) FOR WOOD STRUCTURAL PANEL SHEAR WALLS WITH FRAMING OF DOUGLAS-FIR-LARCH, OR SOUTHERN PINE[a] FOR WIND OR SEISMIC LOADING[b, h, i, j]

PANEL GRADE	MINIMUM NOMINAL PANEL THICKNESS (inch)	MINIMUM FASTENER PENETRATION IN FRAMING (inches)	PANELS APPLIED DIRECT TO FRAMING					PANELS APPLIED OVER 1/2" OR 5/8" GYPSUM SHEATHING				
			NAIL (common or galvanized box) or staple size[k]	Fastener spacing at panel edges (inches)				NAIL (common or galvanized box) or staple size[k]	Fastener spacing at panel edges (inches)			
				6	4	3	2[e]		6	4	3	2[e]
Structural I Sheathing	5/16	1-1/4	6d	200	300	390	510	8d	200	300	390	510
		1	1-1/2 16 Gage	165	245	325	415	2 16 Gage	125	185	245	315
	3/8	1-3/8	8d	230[d]	360[d]	460[d]	610[d]	10d	280	430	550[f]	730
		1	1-1/2 16 Gage	155	235	315	400	2 16 Gage	155	235	310	400
	7/16	1-3/8	8d	255[d]	395[d]	505[d]	670[d]	10d	280	430	550[f]	730
		1	1-1/2 16 Gage	170	260	345	440	2 16 Gage	155	235	310	400
	15\32	1-3/8	8d	280	430	550	730	10d	280	430	550[f]	730
		1	1-1/2 16 Gage	185	280	375	475	2 16 Gage	155	235	300	400
		1-1/2	10d	340	510	665[f]	870	10d	—	—	—	—
Sheathing, plywood siding[g] except Group 5 Species	5/16 or 1/4 [c]	1-1/4	6d	180	270	350	450	8d	180	270	350	450
		1	1-1/2 16 Gage	145	220	295	375	2 16 Gage	110	165	220	285
	3/8	1-1/4	6d	200	300	390	510	8d	200	300	390	510
		1-3/8	8d	220[d]	320[d]	410[d]	530[d]	10d	260	380	490[f]	640

		1	1-1/2 16 Gage	140	210	280	360	2 16 Gage	140	210	280	360
	7/16	1-3/8	8d	240[d]	350[d]	450[d]	585[d]	10d	260	380	490[f]	640
		1	1-1/2 16 Gage	155	230	310	395	2 16 Gage	140	210	280	360
	15/32	1-3/8	8d	260	380	490	640	10d	260	380	490[f]	640
		1-1/2	10d	310	460	600[f]	770	—	—	—	—	—
		1	1-1/2 16 Gage	170	255	335	430	2 16 Gage	140	210	280	360
	19/32	1-1/2	10d	340	510	665[f]	870	—	—	—	—	—
		1	1-3/4 16 Gage	185	280	375	475	—	—	—	—	—
			Nail Size (galvanized casing)					Nail Size (galvanized casing)				
	5/16[c]	1-1/4	6d	140	210	275	360	8d	140	210	275	360
	3/8	1-3/8	8d	160	240	310	410	10d	160	240	310[f]	410

a. For framing of other species: (1) Find specific gravity for species of lumber in AF&PA National Design Specification. (2) For staples find shear value from table above for Structural I panels (regardless of actual grade) and multiply value by 0.82 for species with specific gravity of 0.42 or greater, or 0.65 for all other species. (3) For nails find shear value from table above for nail size for actual grade and multiply value by the following adjustment factor: Specific Gravity Adjustment Factor = [1-(0.5 - SG)], where SG = Specific Gravity of the framing lumber. This adjustment factor shall not be greater than 1.

b. Panel edges backed with 2-inch nominal or wider framing. Install panels either horizontally or vertically. Space fasteners maximum 6 inches on center along intermediate framing members for 3/8-inch and 7/16-inch panels installed on studs spaced 24 inches on center. For other conditions and panel thickness, space fasteners maximum 12 inches on center on intermediate supports.

ACTING CITY CLERK

c. 3/8-inch panel thickness or siding with a span rating of 16 inches on center is the minimum recommended where applied direct to framing as exterior siding.

d. Shears are permitted to be increased to values shown for 15/32-inch sheathing with same nailing provided (a) studs are spaced a maximum of 16 inches on center, or (b) if panels are applied with long dimension across studs.

e. Framing at adjoining panel edges shall be 3 inches nominal or wider, and nails shall be staggered where nails are spaced 2 inches on center.

f. Framing at adjoining panel edges shall be 3 inches nominal or wider, and nails shall be staggered where both of the following conditions are met: (1) 10d nails having penetration into framing of more than 1 1/2 inches and (2) nails are spaced 3 inches on center.

g. Values apply to all-veneer plywood. Thickness at point of fastening on panel edges governs shear values.

h. Where panels are applied on both faces of a wall and nail spacing is less than 6 inches o.c. on either side, panel joints shall be offset to fall on different framing members. Or framing shall be 3 inch nominal or thicker and nails on each side shall be staggered.

i. In Seismic Design Category D, E or F, where shear design values exceed 490 pounds per lineal foot (LRFD) or 350 pounds per lineal foot (ASD) all framing members receiving edge nailing from abutting panels shall not be less than a single 3-inch nominal member<u>, or 2 two-inch nominal members fastened together in accordance with Section 2307.1 (LRFD) or Section 2306.1 (ASD) to transfer the design shear value between framing members</u>. Plywood joint and sill plate nailing shall be staggered in all cases. See Section 2305.3.10 for sill plate size and anchorage requirements.

j. Galvanized nails shall be hot dipped or tumbled.

k. Staples shall have a minimum crown width of 7/16 inch.

ACTING CITY CLERK

Section 182. Subsection 2503.1 of the International Building Code, 2003 Edition, is amended as follows:

2503.1 Inspection. Lath and gypsum board shall be inspected in accordance with Section ((~~109.3.5~~)) 108.

Section 183. Subsections 2509.2 and 2509.3 of the International Building Code, 2003 Edition, are amended as follows:

2509.2 Base for tile. When gypsum board is used as a base for tile or wall panels for tubs, shower or water closet compartment walls, water-resistant gypsum ((~~backing~~)) board shall be used as a substrate. Regular gypsum wallboard is permitted under tile or wall panels in other wall and ceiling areas when installed in accordance with GA-216 or ASTM C 840.

2509.3 Limitations. Water-resistant gypsum ((~~backing~~)) board shall not be used in the following locations:

1. Over a vapor retarder in shower or bathtub compartments.

2. Where there will be direct exposure to water or in areas subject to continuous high humidity.

3. On ceilings where frame spacing exceeds ((~~12~~)) 16 inches (((~~305~~)) 406 mm) o.c. for 1/2-inch-thick (12.7 mm) water-resistant gypsum ((~~backing~~)) board and more than ((~~16~~)) 24 inches (406 mm) o.c. for 5/8-inch-thick (15.9 mm) water-resistant gypsum ((~~backing~~)) board.

Section 184. Sections 2701 and 2702 of the International Building Code, 2003 Edition, are amended as follows:

2701.1 Scope. This chapter governs the electrical components, equipment and systems used in buildings and structures covered by this code. Electrical components, equipment and systems

ACTING CITY CLERK

shall be designed and constructed in accordance with the provisions of the ((~~ICC~~)) *Seattle Electrical Code*.

2702.1 Installation. Emergency and standby power systems shall be installed in accordance with the ((~~ICC~~)) *Seattle Electrical Code*, NFPA 110 and NFPA 111.

2702.1.1 Stationary generators. Emergency and standby power generators shall be listed in accordance with UL 2200.

2702.2 Where required. Emergency and standby power systems shall be provided where required by Sections 2702.2.1 through 2702.2.19 and other sections of this code.

2702.2.1 Group A occupancies. Emergency power shall be provided for voice communication systems in Group A occupancies in accordance with Section 907.2.1.2.

2702.2.2 Smoke control systems. ((~~Standby~~)) Emergency power shall be provided for smoke control systems in accordance with Section 909.11. Standby power shall be provided for pressurization systems in low-rise buildings in accordance with Section 909.22.

2702.2.3 Exit signs. Emergency power shall be provided for exit signs in accordance with Section 1011.5.3.

2702.2.4 Means of egress illumination. Emergency power shall be provided for means of egress illumination in accordance with Section 1006.3.

2702.2.5 Accessible means of egress elevators. Standby power shall be provided for elevators that are part of an accessible means of egress in accordance with Section 1007.4.

2702.2.6 Horizontal sliding doors. Standby power shall be provided for horizontal sliding doors in accordance with Section 1008.1.3.3.

2702.2.7 Semiconductor fabrication facilities. Emergency power shall be provided for semiconductor fabrication facilities in accordance with Section 415.9.10.

2702.2.8 Membrane structures. Standby power shall be provided for auxiliary inflation systems in accordance with Section 3102.8.2. Emergency power shall be provided for exit

ACTING CITY CLERK

signs in temporary tents and membrane structures in accordance with the *International Fire Code*.

2702.2.9 Hazardous materials. Emergency or standby power shall be provided in occupancies with hazardous materials in accordance with Section 414.5.4 and the *International Fire Code*.

2702.2.10 Highly toxic and toxic materials. Emergency power shall be provided for occupancies with highly toxic or toxic materials in accordance with the *International Fire Code*.

2702.2.11 Organic peroxides. Standby power shall be provided for occupancies with silane gas in accordance with the *International Fire Code*.

2702.2.12 Pyrophoric materials. Emergency power shall be provided for occupancies with silane gas in accordance with the *International Fire Code*.

2702.2.13 Covered mall buildings. ((~~Standby~~)) Emergency power shall be provided for voice/alarm communication systems in covered mall buildings in accordance with Section 402.12.

2702.2.14 High-rise buildings. Emergency ((~~and standby~~)) power shall be provided in high-rise buildings in accordance with Section((~~s 403.10 and~~)) 403.11.

2702.2.15 Underground buildings. Emergency ((~~and standby~~)) power shall be provided in underground buildings in accordance with Section((~~s 405.9 and~~)) 405.10.

2702.2.16 Group I-3 occupancies. Emergency power shall be provided for doors in Group I-3 occupancies in accordance with Section 408.4.2.

2702.2.17 Airport traffic control towers. Standby power shall be provided in airport traffic control towers in accordance with Section 412.1.5.

2702.2.18 Elevators. ((~~Standby~~)) Emergency power for elevators shall be provided as set forth in Section ((~~3003.1~~)) 403.11 and 3016.7.

ACTING CITY CLERK

2702.2.19 Smokeproof enclosures. ((~~Standby~~)) Emergency power shall be provided for smokeproof enclosures as required by Section 909.20.

2702.3 Maintenance. Emergency and standby power systems shall be maintained and tested in accordance with the *International Fire Code*.

Section 185. Chapter 29 of the Seattle Building Code, 2003 Edition, shall read as follows:

Chapter 29

PLUMBING SYSTEMS

SECTION 2901

PLUMBING AND FOOD CODES

Plumbing systems shall comply with the *Uniform Plumbing Code*. See also the Seattle Food Code, SMC Title 10, Subchapter XLI.

SECTION 2902

GENERAL

2902.1 Enforcement. Authority to enforce Section 2902 is vested in the Director of Public Health.

2902.1.1 General. Plumbing fixtures shall be provided in the minimum number shown in Table 2902.1 and in this Chapter. Where the proposed occupancy is not listed in Table 2902.1, the building official shall determine fixture requirements based on the occupancy which most nearly resembles the intended occupancy.

Plumbing fixtures need not be provided for unoccupied buildings or facilities.

2902.1.2 Private offices. Fixtures only accessible to private offices shall not be counted to determine compliance with this section.

CITY CLERK

2902.1.3 Occupant load distribution. The occupant load shall be divided equally between the sexes, unless data approved by the building official indicates a different distribution of the sexes.

2902.1.4 Food preparation areas. In food preparation, serving and related storage areas, additional fixture requirements may be dictated by health codes.

2902.1.5 Other requirements. For other requirements for plumbing facilities, see Sections 419.15, 1210 and Chapter 11.

2902.2 Access to Fixtures.

2902.2.1 Location. Plumbing fixtures shall be located in each building or conveniently in a building adjacent thereto on the same property.

2902.2.2 Multiple tenants. Access to toilets serving multiple tenants shall be through a common use area and not through an area controlled by a tenant.

2902.2.3 Multi-story buildings. Required fixtures shall not be located more than one vertical story above or below the area served.

2902.3 Separate Facilities.

2902.3.1 Requirements. Separate toilet facilities shall be provided for each sex.

EXCEPTIONS: 1. In occupancies serving 10 or fewer persons, one toilet facility designed for use by no more than one person at a time shall be permitted for use by both sexes.

2. In Groups B and M occupancies with a total floor area of 1500 square feet (139 m^2) or less, one toilet facility designed for use by no more than one person at a time shall be permitted for use by both sexes.

2902.3.2 Food service establishments. When customers and employees share the same facilities, customers accessing the facilities shall be excluded from food preparation and storage areas.

SEATTLE CITY CLERK

2902.4 Pay Facilities. Required facilities shall be free of charge. Where pay facilities are installed, they shall be in addition to the minimum required facilities.

SECTION 2903

SPECIAL PROVISIONS

2903.1 Group R Occupancies.

2903.1.1 Dwelling units. Dwelling units shall contain within a separate room(s), accessible from inside the dwelling unit or residence, a water closet, a lavatory, and a bathtub or shower.

2903.1.2 Hotels and Other Buildings Containing Guest Rooms. In hotels and other buildings containing guest rooms, where private water closets, lavatories and baths are not provided, there shall be provided on each floor at least one water closet and lavatory and one bathtub or shower accessible from a public hallway. Additional water closets, lavatories, and bathtubs or showers shall be provided on each floor at the rate of one for every additional 8 guests or occupants, or fractional number thereof in excess of 8.

On floors with fewer than 8 occupants, the required sanitary facilities may be provided on an adjacent floor if the floor on which the facilities are provided is directly and readily accessible to such occupants and if such use does not cause the facilities to be used by a total of more than 8 persons.

2903.1.3 Kitchens. Dwelling units shall be provided with a kitchen. Kitchens shall be provided with a kitchen sink, hot and cold running water.

2903.2 Water closet space requirements. The water closet stool in all occupancies shall be located in a clear space not less than 30 inches (762 mm) in width, with a clear space in front of the stool of not less than 24 inches (610 mm).

2903.3 Water. Each required sink, lavatory, bathtub and shower stall shall be equipped with hot and cold running water necessary for its normal operation.

ACTING CITY CLERK

2903.4 Drinking Fountains.

2903.4.1 Number. Occupant loads over 30 shall have one drinking fountain for the first 150 occupants, then one per each additional 500 occupants.

EXCEPTIONS: 1. Sporting facilities with concessions serving drinks shall have one drinking fountain for each 1000 occupants.

2. A drinking fountain need not be provided in a drinking or dining establishment.

2903.4.2 Multi-story buildings. Drinking fountains shall be provided on each floor having more than 30 occupants in schools, dormitories, auditoriums, theaters, offices and public buildings.

2903.4.3 Penal institutions. Penal institutions shall have one drinking fountain on each cell block floor and one on each exercise floor.

2903.4.4 Location. Drinking fountains shall not be located in toilet rooms.

2903.5 Fixtures. All plumbing fixtures shall be trapped and vented and connected to a sanitary sewer or to an approved private sewage disposal system. There shall be an approved system of water supply, providing both hot and cold running water at a rate of not less than one gallon per minute. All water closets shall be flush type in good working order.

Exception: Composting toilets shall comply with standards specified by the Director of Public Health.

TABLE 2902.1 -- MINIMUM PLUMBING FIXTURES[1,2,4,6]

TYPE OF BUILDING OR OCCUPANCY	WATER CLOSETS (fixtures per person)		LAVATORIES[5] (fixtures per person)		BATHTUB OR SHOWER (fixtures per person)
	MALE[3]	FEMALE	MALE	FEMALE	
For the occupancies listed below, use 30 square feet (2.79 m²) per occupant for the minimum number of plumbing fixtures.					
Group A					
Conference rooms, dining rooms, drinking establishments, exhibit rooms, gymnasiums,	1:1-25	1:1-25	One per 2 water closets		
	2:26-75	2:26-75			
	3:76-125	3:76-125			
	4:126-200	4:126-200			

ACTING CITY CLERK

lounges, stages and similar uses including restaurants classified as Group B Occupancies	5:201-300	5:201-300			
	6:301-400	6:301-400			
	Over 400, add one fixture for each additional 200 males or 150 females				
For the assembly occupancies listed below, use the number of fixed seating or, where no fixed seating is provided, use 15 square feet (1.39 m^2) per occupant for the minimum number of plumbing fixtures.					
Assembly places -- Theaters, auditoriums, convention halls, dance floors, lodge rooms, casinos, and such places which have limited time for fixture use (intermissions)	1:1-100	One per 25	1:1-200	1:1-200	
	2:101-200	Up to 400	2:201-400	2:201-400	
	3:201-400		3:401-750	3:401-750	
	Over 400, add one fixture for each additional 250 males or 50 females		Over 750, add one fixture for each additional 500 persons		
Assembly places -- Stadiums, arena and other sporting facilities where fixture use is not limited to intermissions	1:1-100	One per 50	1:1-200	1:1-200	
	2:101-200	Up to 400	2:201-400	2:201-400	
	3:201-400		3:401-750	3:401-750	
	Over 400, add one fixture for each additional 300 males or 100 females		Over 750, add one fixture for each additional 500 persons		
For the assembly occupancies listed below, use the number of fixed seating or, where no fixed seating is provided, use 30 square feet (2.79 m^2) per occupant for the minimum number of plumbing fixtures.					
Worship places					
Principal assembly area	One per 150	One per 75	One per 2 water closets		
Educational & activity unit	One per 125	One per 75	One per 2 water closets		
For the occupancies listed below, use 200 square feet (18.58 m^2) per occupant for the minimum number of plumbing fixtures.					
Group B and other clerical or administrative employee accessory use	1:1-15	1:1-15	One per 2 water closets		
	2:16-35	2:16-35			
	3:36-55	3:36-55			
	Over 55, add one for each additional 50 persons				
For the occupancies listed below, use 100 square feet (9.3 m^2) per student for the minimum number of plumbing fixtures.					
Group E	1:1-15	1:1-15	One per 2 water closets		
Schools - for staff use	2:16-35	2:16-35			
All schools	3:36-55	3:36-55			
(One staff per 20 students)	Over 55, add one fixture for each additional 40 persons				
Schools - for student use	1:1-20	1:1-20	1:1-20	1:1-20	

ACTING CITY CLERK

Day care	2:21-50	2:21-50	2:21-50	2:21-50	
	Over 50, add one fixture for each additional 50 persons		Over 50, add one fixture for each additional 50 persons		
Elementary	One per 30	One per 25	One per 2 water closets		
Secondary	One per 40	One per 30	One per 2 water closets		
For the occupancies listed below, use 50 square feet (4.65 m^2) per occupant for the minimum number of plumbing fixtures.					
Education facilities other than Group E					
Others (colleges, universities, adult centers, etc.)	One per 40	One per 25	One per 2 water closets		
For the occupancies listed below, use 2,000 square feet (185.8 m^2) per occupant for the minimum number of plumbing fixtures.					
Group F and Group H	1:1-10	1:1-10	One per 2 water closets		
Workshop, foundries and similar establishments, and hazardous occupancies	2:11-25	2:11-25			One shower for each 15 persons exposed to excessive heat or to skin contamination with irritating materials
	3:26-50	3:26-50			
	4:51-75	4:51-75			
	5:76-100	5:76-100			
	Over 100, add one fixture for each additional 30 persons				
For the occupancies listed below, use the designated application and 200 square feet (18.58 m^2) per occupant of the general use area for the minimum number of plumbing fixtures.					
Group I[7]					
Hospital waiting rooms	One per room (usable by either sex)		One per room		
Hospital general use areas	1:1-15	1:1-15	One per 2 water closets		
	2:16-35	3:16-35			
	3:36-55	3:36-55			
	Over 55, add one fixture for each additional 40 persons				
Hospital patient rooms:					
Single Bed	One adjacent to and directly accessible from		One per toilet room		One per toilet room
Isolation	One adjacent to and directly accessible from		One per toilet room		One per toilet room
Multibed	One per 4 patients		One per 4 patients		One per 8 patients
Long-term	One per 4 patients		One per 4 patients		One per 15 patients
Jails and reformatories					
Cell	One per cell		One per cell		

Exercise room	One per exercise room		One per exercise room		
Other institutions (on each occupied floor)	One per 25	One per 25	One per 2 water closets		One per 8
Group LC	For Group LC Occupancies, the minimum number of plumbing fixtures is specified in Section 419.15.				
For the occupancies listed below, use 200 square feet (18.58 m^2) per occupant for the minimum number of plumbing fixtures.					
Group M					
Retail or wholesale stores	1:1-50	1:1-50	One per 2 water closets		
	2:51-100	2:51-100			
	3:101-400	3:101-200			
		4:201-300			
		5:301-400			
	Over 400, add one fixture for each additional 300 males or 150 females				
For Group R Occupancies containing dwelling units or guest rooms, use the table below. For dormitories, use 200 square feet (18.58 m^2) per occupant for the minimum number of plumbing fixtures.					
Group R					
Dwelling units	One per dwelling unit		One per dwelling unit		One per dwelling unit
Hotel, motel, and boarding house guest rooms	One per guest room		One per guest room		One per guest room
Dormitories	One per 10	One per 8	One per 12	One per 12	One per 8
	Over 10, add one fixture for each additional 25 males and over 8, add one for each additional 20 females		Over 12, add one fixture for each additional 20 males and one for each additional 15 females		For females, add one additional unit per each additional 30. Over 150 persons, add one additional unit per each additional 20 persons
For the occupancies listed below, use 5,000 square feet (464.5 m^2) per occupant for the minimum number of plumbing fixtures.					
Group S	1:1-10	1:1-10	One per 40 occupants of each sex		One shower for each 15 persons exposed to excessive heat or to skin contamination with poisonous, infectious or irritating materials
Warehouses	2:11-25	2:11-25			
	3:26-50	3:26-50			
	4:51-75	4:51-75			
	5:76-100	5:76-100			
	Over 100, add one for each 30 persons				

ACTING CITY CLERK

Section 186. Chapter 30 of the Seattle Building Code, 2003 edition, shall read as follows:

CHAPTER 30

ELEVATORS AND CONVEYING SYSTEMS

Section 3001 — PURPOSE

The purpose of this chapter is to protect persons, buildings and the contents thereof from hazards arising from the use of elevators, dumbwaiters, material lifts, escalators and moving walks by establishing minimum requirements regulating the design, construction, alteration, operation and maintenance of elevators, dumbwaiters, material lifts, escalators and moving walks, and by establishing procedures by which these requirements may be enforced.

Section 3002 — SCOPE

3002.1 General. This code of safety standards covers the design, construction, installation, operation, inspection testing, maintenance, alteration and repair of elevators, dumbwaiters, material lifts, escalators, moving walks and their hoistways.

3002.2 Application to Existing Conveyances.

3002.2.1 Minimum Standard for Existing Conveyances. All existing conveyances shall comply with Washington Administrative Code (WAC) Chapter 296-96 Part D as a minimum standard.

3002.2.2 Maintenance. All conveyances covered under this chapter, both existing and new, and all parts thereof shall be maintained in a safe condition. All devices and safeguards that are required by this chapter shall be maintained in good working order. All devices or safeguards that were required by a code in effect when the conveyance was installed, altered, or repaired shall be maintained in good working order. The owner or the owner's designated agent is responsible for the maintenance of such equipment.

ACTING CITY CLERK

3002.2.3 Repairs and Replacements. Repairs to existing conveyances and replacements of devices and components shall be made with parts of at least equivalent material, strength and design. They shall comply with WAC 296-96 Part D and ASME A17.1 Section 8.6.

3002.2.4 Additions and Alterations. Additions and alterations may be made to the conveyance system of existing buildings or structures without making the entire system comply with all of the requirements of this chapter for new buildings or structures, provided the additions and alterations that are made shall comply with the requirements of this chapter for a new system, except as otherwise specifically provided in this code and in other applicable retroactive ordinances of the city.

Unless otherwise approved by the building official, alterations, repairs, replacements and maintenance of conveyances shall comply with the requirements of Section 8.7 of ASME A17.1. Where Section 8.7 refers to a requirement which has been amended by this chapter, the requirements of this chapter shall take precedence. Where Section 8.7 refers to ASME A17.3, the requirements of WAC 296-96 Part D shall apply. Alterations to existing material lifts shall conform with the requirements of WAC Chapter 296-96 Part C1 Material Lifts.

3002.2.5 Seismic Improvements. The Director may promulgate rules to establish standards for seismic improvements to existing conveyances.

3002.2.6 Change of Use. When the use of an existing freight elevator is changed to conveyance of passengers, the elevator must comply with the retroactive requirements of this code and WAC 296-96 Part D for passenger elevators.

3002.2.7 Historic Buildings and Structures. See Section 3403.9 for regulations regarding historic buildings or structures.

3002.3 References to the National Electrical Code. For the purpose of this chapter, all references in the ASME Code to the National Electrical Code shall include the Seattle Electrical

ACTING CITY CLERK

Code. All electrical work shall be done in accordance with the requirements of the Seattle Electrical Code.

3002.4 Conflicts. In any case where the codes adopted by reference in Section 3003 conflict with the requirements of this chapter, this chapter shall control.

SECTION 3003 — CODES ADOPTED BY REFERENCE

The following codes are hereby adopted by reference and together with the provisions of this chapter shall constitute the Elevator Code of the City of Seattle. A copy of each is filed with the City Clerk.

1. ASME Codes:
   - 1.1. Safety Code for Elevators and Escalators, ASME A17.1-2000, A17.1a-2002, A17.1b-2003 and Appendices A through M, and Appendix O.

     EXCEPTION: ASME A17.1 Section 5.10, Elevators Used for Construction, is not adopted.
   - 1.2 Safety Standard For Platform Lifts and Stairway Chairlifts, ASME A18.1-1999, A18.1a-2001 and A18.1b-2001.
2. The building official may adopt by administrative rule, in accordance with Section 104.17 of this code, addenda to the Safety Code for Elevators and Escalators, ASME A17.1-2000 which further the intent and purpose of this code, which encourage the use of state of the art technology, materials or methods of construction, and which provide standards which are equal or better than those contained in this code.
3. Safety regulations for all elevators, dumbwaiters, escalators and other conveyances, Washington Administrative Code Chapter 296-96, effective January 22, 2001.

   EXCEPTIONS: The following sections of WAC Chapter 296-96 are not adopted:

ACTING CITY CLERK

1. Part B, Licenses and Fees for all Elevators, Dumbwaiters, Escalators, and Other Devices, WAC 296-96-00900 through -01075.
2. Part C3, Construction, Operation, Maintenance and Inspection of Private Residence Conveyances for Transporting Property for Residential Use, WAC 296-96-08010 through -08250.
3. Part C4, Temporary Hoists, WAC 296-96-09001 through -10002.
4. Part C5, Additional Types of Conveyances, WAC 296-96-11001 through -20005.

SECTION 3004 — DEFINITIONS

The following definitions are in addition to Section 1.3 of ASME A17.1, RCW 70.87, Laws Governing Elevators and Other Lifting Devices, and Chapter 2 of this code.

ALTERATIONS, REPAIRS AND REPLACEMENTS - See ASME A17.1 Section 1.3.

ASME CODE means the American National Standard Safety Code for Elevators and Escalators as adopted in Section 3003.

AUTOMATIC ELEVATOR shall mean a type of elevator which does not require an attendant. All calls are registered by the passengers.

AUTOMOBILE PARKING ELEVATOR shall mean an elevator located in either a stationary or horizontally moving hoistway and used exclusively for parking automobiles where, during the parking process, each automobile is moved under its own power onto and off the elevator directly into parking spaces or cubicles in line with the elevator and where no persons are normally stationed on any level except the receiving level.

CONVEYANCE shall mean an elevator, escalator, dumbwaiter, material lift, automobile parking elevator or moving walk.

CONVEYANCES IN SERVICE shall mean that the units are in operation, are inspected and certified for operation by the building official.

ACTING CITY CLERK

CONVEYANCES OUT OF SERVICE shall mean the use of the unit has been prohibited either temporarily or permanently in accordance with Section 3005 below.

ENFORCING AUTHORITY as used in the ASME Code means the building official.

EXISTING INSTALLATIONS means all conveyances which have been tested and approved for use by the building official.

INSPECTOR means inspectors employed by the City of Seattle and working under order from the building official.

MATERIAL LIFT means a fixed, stationary conveyance that:

1. Has a car or platform that moves in guides;
2. Serves two or more floors or landings of a building or structure;
3. Has a vertical rise of at least five feet (1524 mm) and no more than sixty feet (18 288 mm);
4. Has a maximum speed of fifty feet (15 240 mm) per minute;
5. Is an isolated, self-contained lift and is not a part of a conveying system;
6. Travels in an inclined or vertical, but not horizontal, direction;
7. Is operated only by, or under the direct supervision of, an individual designated by the employer; and
8. Is installed in a commercial or industrial area, and not in an area that is open to access by the general public.

SECTION 3005 — AUTHORITY TO DISCONNECT UTILITIES, TAKE CONVEYANCES OUT OF SERVICE AND INVESTIGATE ACCIDENTS

3005.1 Disconnection of Utilities. In addition to the provisions for Emergency Orders provided in Section 102.2 of this code, the building official shall have the authority to disconnect or order discontinuance of any utility service or energy supply to equipment regulated by this code in cases of emergency or where necessary for safety to life and property. Such utility service shall

ACTING CITY CLERK

be discontinued until the equipment, appliances, devices or wiring found to be defective or defectively installed are replaced, repaired, or restored to a safe condition. Proper posting and seals shall be affixed to the equipment to prevent inadvertent use.

3005.2 Conveyances Out of Service. A conveyance shall be taken out of service temporarily after the building official has inspected the unit for proper parking of the car, securing the hoistway openings, and disconnection of power. A seal and tag shall be placed on the equipment to insure against unauthorized use. A conveyance may remain in a temporarily out-of-service status for a period not to exceed two years, after which time it shall be placed in a permanently out-of-service status.

EXCEPTION: Elevators which could be returned to service without repair may remain in a temporary out-of-service status with approval of the building official.

A conveyance shall be deemed permanently out of service by landing the car and counterweights and removing the hoisting cables or fluid lines. Conveyances placed in a permanently out-of-service status shall have the hoistway sealed off for fire protection by securing existing doors.

Conveyances in an out-of-service status either temporarily or permanently may be placed back into service and classified as an existing installation unless determined to be hazardous by the building official. Requirements in effect at that time must be completed before certification and use. No installation or reconnection of hydraulic elevators powered by city water pressure will be permitted.

3005.3 Report and Investigation of Accidents. The owner or the owner's authorized agent shall promptly notify the building official of each accident involving a conveyance which requires the service of a physician or results in a disability exceeding one day, and shall afford the building official every facility for investigating and inspecting the accident. The building official shall without delay, after being notified, make an inspection and shall place on file a full

ACTING CITY CLERK

and complete report of the accident. The report shall give in detail all material facts and information available and the cause or causes, so far as they can be determined. The report shall be open to public inspection at all reasonable hours. When an accident involves the failure or destruction of any part of the construction or the operating mechanism of a conveyance, the use of the conveyance is forbidden until it has been made safe; it has been reinspected and any repairs, changes, or alterations have been approved by the department; and a permit has been issued by the building official. The removal of any part of the damaged construction or operating mechanism from the premises is forbidden until the building official grants permission to do so.

SECTION 3006 — INSTALLATION AND ALTERATION PERMITS

3006.1 Installation Permits. A permit issued by the building official shall be required to install any elevator, escalator, dumbwaiter, automobile parking elevator, material lift or moving walk. A separate permit shall be obtained for each conveyance installed regardless of location and/or contract arrangements.

3006.2 Alteration/Repair Permits. A permit is required to make any alterations to existing elevators, escalators, dumbwaiters, automobile parking elevators, material lifts, moving walks or lifts for people with disabilities. A separate permit shall be obtained for each conveyance altered or relocated regardless of location and/or contract arrangements.

EXCEPTIONS: 1. Permits for repairs required by inspection reports may be combined for a single building.

2. The building official may issue a single permit for minor alterations to more than one conveyance which do not require individual retesting of each conveyance.
3. No permit shall be required for ordinary repairs, made with parts of the same materials, strength and design normally necessary for maintenance.
4. No permit shall be required for: modifications of cars which do not change the weight or materials (see ASME A17.1, Sections 8.7.2.15.2 and 8.7.3.21); connection of alarm to

ACTING CITY CLERK

stop switch; securing of car top exit cover; installation of door extension panels; cable guards; switch covers; access ladders or access modification; capacity posting; repairs of lighting fixtures; counterweight and pit guards; photoelectric eye devices and/or repairs to hoistway enclosures. All such installations and/or modifications shall be in conformance with the requirements of this code.

3006.3 Expiration and Renewal of Permits. Section 106.9 of the Seattle Building Code shall apply to permits required by this chapter.

SECTION 3007 — PLANS AND SPECIFICATIONS

Two sets of drawings shall be submitted with applications for installations of new elevators, escalators, dumbwaiters, automobile parking elevators, material lifts and moving walks.

In lieu of complete erection drawings and plans the building official may require details of any portion of an installation. When an installation requires material, fabrication or construction other than recognized standard types, has an offset car frame or is an observation-type elevator installed in other than a fully enclosed hoistway, drawings and details shall be submitted with the application for permit.

SECTION 3008 — REQUIRED INSTALLATION INSPECTIONS

It shall be the duty of the person doing the work authorized by a permit to notify the building official that such work is ready for inspection.

It shall be the duty of the person requesting any inspections required by this code to provide access to and means for proper inspection of such work.

Final inspection shall be called for when the work described on the permit has been completed, and when ready for testing with weights and instruments as may be needed. A final inspection is required after all wiring has been completed and all permanent fixtures such as switches, outlet receptacles, plates, lighting fixtures and all other equipment has been properly installed and the hoistway and machine rooms are properly completed.

ACTING CITY CLERK

SECTION 3009 — CERTIFICATES OF INSPECTION AND OPERATION

3009.1 Certificates Required. It shall be unlawful to operate any elevator, escalator, dumbwaiter, automobile parking elevator, material lift or moving walk without a certificate of inspection issued by the building official. A certificate of inspection shall be issued following an inspection by the building official showing that the conveyance has been found to be in safe operating condition and applicable fees for inspection time, as put forth in the Fee Subtitle, have been paid. The certificate shall remain valid until 45 days after the next inspection or until the certificate is withdrawn, whichever comes first.

EXCEPTION: The building official may, after inspection of a conveyance under construction, authorize temporary use of the conveyance without issuing a certificate of inspection if the building official determines that temporary operation of the conveyance is reasonably safe. The building official may authorize temporary use for a period not to exceed 60 days to allow completion of the installation and passing of the final inspection.

If, at any time during the period of temporary use, the building official determines that the building owner is not making adequate progress toward obtaining a certificate of inspection, the building official may withdraw the temporary use approval on 7-day notice. The building official may forbid further use of the conveyance until a certificate of inspection is obtained.

Operation of a conveyance without either a valid certificate of inspection or authorization of temporary use shall be a violation of this code, as described in Section 103.

Whenever any conveyance is found to be unsafe or fails to comply with a notice of correction, the building official may withdraw the certificate of inspection.

3009.2 Periodic Inspections. The building official shall cause inspections to be made of every conveyance at intervals of 12 months or as soon thereafter as is practical. The inspector shall file a full and correct report on each conveyance with the building official that shall note any ordinance violations, corrections required and/or the general condition of the conveyance.

ACTING CITY CLERK

3009.3 Inspection Report by Building Official. After each required inspection of a conveyance the building official shall mail a copy of the inspection report to the owner of the conveyance inspected. If inspection shows a conveyance to be in violation of the requirements of this chapter, the building official shall issue a notice in writing listing the corrections to be made to the conveyance which are necessary to bring it into compliance with this chapter and may order the operation thereof discontinued until the corrections are made.

3009.4 Inspections, Tests and Test Reports. Reports of required tests shall be submitted to the owner and to the building official on forms furnished by the building official. Performance of required tests and their cost shall be the responsibility of the owner. Identification of conveyances shall be noted by use of assigned city numbers.

SECTION 3010 — REQUIREMENTS FOR OPERATION AND MAINTENANCE

The owner shall be responsible for the safe operation and maintenance of each device regulated by this chapter. The installation of pipes, ducts, conduits, wiring and the storage of materials not required for the operation of the elevator is prohibited in machine rooms and hoistways. Sidewalk elevators on public places are also subject to the requirements of Title 15, Seattle Municipal Code, Street and Sidewalk Use, as amended. (See also Section 3022.)

SECTION 3011 — RETROACTIVE REQUIREMENTS FOR EXISTING INSTALLATIONS

3011.1 General. Existing conveyances shall be made to comply with WAC 296-96 Part D, Regulations for Existing Elevators, Dumbwaiters, and Escalators and the provisions of this section.

3011.2 Doors to Elevator and Dumbwaiter Machine Rooms. Elevator and dumbwaiter machine room doors shall be self-closing and self-locking. The lock shall be a spring-type lock arranged to permit the door to be opened from the inside without a key, incapable of being left in the unlocked position, and accessible only by a key from the outside.

ACTING CITY CLERK

3011.3 Key Retainer Box. A key retainer box locked and keyed to the standard City access key for elevator access and operation keys shall be provided. The retainer box shall meet the following standards:

1. Dimensions - eight inches high, six inches wide, one inch deep.
2. Material - sixteen gauge steel welded.
3. Color - red (unless located in the main lobby above the hall call button, six feet nominal above the floor).
4. Labeling - "FOR FIRE DEPARTMENT USE."
5. Lock - Ace one-inch cylinder cam lock key #39504.

The key box is to be installed at the designated recall floor above the Phase I recall switch or in the main lobby above the hall call button when no recall feature exists. The key box is to be mounted six feet nominal above the floor. Other locations may be approved by the building official upon request.

Boxes are permitted to comply with Section 3016.9 as an alternative to complying with this section.

3011.4 Elevator Access Keys. Keys for access to and for the operation of elevator equipment shall be tagged and retained in the key box. The key box shall contain fire emergency service keys (Phase I and II, one key for each switch) and any or all of the following additional keys:

1. Machine room door;
2. Secondary level door;
3. Pit door;
4. Roof door;
5. Independent, hospital emergency and/or attendant operation;
6. Hoistway access;
7. Mechanical hoistway access devices (broken arm, lunar, etc.);

ACTING CITY CLERK

8. Miscellaneous switch keys;
9. Fire alarm panel room;
10. Sprinkler valve control room.

3011.5 Dumbwaiter Machinery Access. Access doors to dumbwaiter machinery space shall be provided with electric contacts and labeled on the exterior side "DANGER - DUMBWAITER MACHINE" in one-inch letters.

3011.6 Machine Space Lighting and Receptacles. Permanent electric lighting shall be provided in all machine rooms and machinery spaces. The illumination shall be not less than 10 footcandles (108 lux) at the floor level. The lighting control switch shall be located within easy reach of the access to the room or space. Where practicable, the light control switch shall be located on the lock-jamb side of the access door. Where practical, elevator pits and machine rooms shall be provided with an electrical receptacle.

3011.7 Access to Terminal Landings. Mechanical access to terminal landings of elevator hoistways shall be provided in accordance with WAC 296-96-23162 (1).

3011.8 Wall Covering Material for Passenger Cars. All materials exposed to the car interior and the hoistway shall be metal or shall conform to the following:

(1) Materials in their end use configuration, other than those covered by paragraph (2) below, shall conform to the following requirements, based on the tests conducted in accordance with the requirements of ASTM E84:

(a) flame spread rating of 0 to 75;

(b) smoke development of 0 to 450.

(2) Napped, tufted, wove, looped, and similar materials in their end use configuration on car enclosure walls shall have a flame spread rating of 0-25.

ACTING CITY CLERK

(3) Padded protective linings, for temporary use in passenger cars during the handling of freight, shall be of materials conforming to either paragraph (1) or (2) above. The protective lining shall clear the floor by not less than 4 inches (102 mm).

(4) Floor covering, underlayment, and its adhesive shall have a critical radiant flux of not less than 0.45 W/cm^2 as measured by ASTM E 648. Floor finish materials of a traditional type such as wood, vinyl, linoleum and terrazzo may be used.

Exception: Handrails, operating devices, ventilating devices, signal fixtures, audio and visual communication devices, and their housings are not required to comply with this Section 3011.8.

3011.9 Control and Operating Circuits and Overcurrent Protection. Overcurrent protection shall be maintained in accordance with *1984 National Electrical Code* Section 620-61.

3011.9.1 Control and Operating Circuits.

3011.9.1.1 Electric Elevators. 1. For electric elevators, the normal and final terminal stopping device shall not control the same controller switches unless two or more separate and independent switches are provided, two of which shall be closed to complete the driving-machine motor-and-brake circuit in either direction of travel. Where a two- or three-phase alternating current driving-machine motor is used, these switches shall be of the multipole type.

The control shall be so designed and installed that a single ground or short circuit may permit either, but not prevent both, the normal and final stopping device circuits from stopping the car.

2. In the design and installation of the control and operating circuits in electric elevators, the following requirements shall be met:

ACTING CITY CLERK

a. If springs are used to actuate switches, contactors or relays to break the circuit to stop an elevator at the terminal landings, they shall be of the compression type.

b. The completion or maintenance of an electric circuit shall not be used to interrupt the power to the elevator driving-machine motor or brake at the terminal landings, nor to stop the car when the emergency stop switch is opened or any of the electrical protective devices operate.

Exception: The requirements of this rule do not apply to dynamic braking, nor to speed control switches.

c. The failure of any single magnetically operated switch, contactor or relay to release in the intended manner, or the failure of any static control device to operate as intended, or the occurrence of a single accidental ground, shall not permit the car to start or run if any hoistway door interlock is unlocked or if any hoistway door or car door or gate electric contact is not in the closed position.

d. Where generator-field control is used, means shall be provided to prevent the generator from building up and applying sufficient current to the elevator driving-machine motor to move the car when the elevator motor control switches are in the "OFF" position. The means used shall not interfere with maintenance of an effective dynamic-braking circuit during stopping and standstill conditions.

e. The control circuits shall be so designed and installed that the car speed in the down direction with rated load in the car, under normal operating conditions with the power supply on or off shall not exceed governor tripping speed or 125 percent of rated speed, whichever is the lesser.

ACTING CITY CLERK

3. Elevators with driving motors employing static control without motor generator sets shall conform to the following requirements:
    a. Two devices shall be provided to remove power independently from the driving-machine motor. At least one device shall be an electromechanical contactor.
    b. The contactor shall be arranged to open each time the car stops.
    c. The contactor shall open the driving-machine brake circuit.
    d. An additional contactor shall be provided to also open the driving-machine brake circuit. This contactor is not required to have contacts in the driving-machine motor circuit.
    e. The electrical protective devices required by Rule 210.2 of ASME A17.1d-1986 shall control the solid state device and both contactors.
    Exception: Leveling can take place with power opening of doors and gates as restricted by the requirements of Rules 112.2a(1) and 112.2b(1) of ASME A17.1d-1986.
    f. After each elevator stop, the car shall not respond to a signal to start unless both contactors are in the de-energized position.
    Exception: Elevators employing alternating-current hoist motors driven from a direct-current source through a static inverter.
4. Elevators employing alternating-current driving motors driven from a direct-current power source through a static inverter shall conform to the following requirements:
    a. Two separate means shall be provided to independently inhibit the flow of alternating current through the solid state devices that connect the direct-

ACTING CITY CLERK

current power source to the alternating-current driving motor. At least one of the means shall be an electromechanical relay.

b. The relay shall be arranged to open each time the car stops.

c. The relay shall cause the driving-machine brake circuit to open.

d. An additional contactor shall be provided to also open the driving-machine brake circuit. This contactor is not required to have contacts in the driving-machine motor circuit.

e. The electrical protective devices required by Rule 210.2 of ASME A17.1d-1986 shall control both the means that inhibit the flow of alternating current through the solid state devices and the contactors in the brake circuit.

Exception: Leveling can take place with power opening of the doors and gates as restricted by the requirements of Rules 112.2a(1) and 112.2b(1) of ASME A17.1d-1986.

f. After each elevator stop, the car shall not respond to a signal to start unless the relay that inhibits the flow of alternating current through the solid state devices, and the contactors in the brake circuit, are in the de-energized position.

3011.9.1.2 Hydraulic Elevators. The design and installation of the control and operating circuits for hydraulic elevators shall conform to the following requirements:

a. Springs, where used to actuate switches, contactors or relays to stop an elevator at the terminals or to actuate electrically operated valves, shall be of the compression type.

b. The completion or maintenance of an electric circuit shall not be used to interrupt the power to control-valve-operating magnets nor to the pump

ACTING CITY CLERK

driving motor of electro-hydraulic elevators under the following conditions:

1. To stop the car at the terminals.
2. To stop the car when the emergency-stop switch or any of the electrical protective devices operate.

c. The failure of any single magnetically operated switch, contactor or relay to release in the intended manner or the occurrence of a single accidental ground shall not permit the car to start or run if any hoistway door interlock is unlocked or if any hoistway-door or car-door or gate contact is not in the closed position.

3011.10 Roped Hydraulic Elevators. Roped horizontal hydraulic elevators may continue in service but once taken out of service may not be reactivated.

3011.11 Pit Access and Equipment. Access ladders shall be installed in elevator pits deeper than 3 feet.

Pits shall be illuminated by a permanent luminaire that provides not less than 5 footcandles (54 lux) of illumination at the pit floor. Light bulbs shall be externally guarded to prevent contact and accidental breakage.

Pit light control switches shall be located inside the hoistway of every elevator approximately 48 inches above the threshold, and either within 18 inches of the access door or within reach from the access floor and adjacent to the pit ladder if provided.

Access shall be provided for safe maintenance and inspection of all equipment located in the pit.

3011.12 Floor Numbers. Elevator hoistways shall have floor numbers, not less than 2 inches in height, placed on the walls and/or doors of hoistways at intervals such that a person in a stalled elevator upon opening the car door could determine the floor position.

ACTING CITY CLERK

3011.13 Car Top Work Light. A permanently wired work light and outlet shall be installed on top of freight and passenger elevators to provide adequate illumination for inspection and work in the hoistway. The light shall be provided with a non-keyed switch in or adjacent to the fixture. The fixture shall be protected from accidental breakage.

3011.14 Labeling. All equipment (disconnect switches, machines and controllers) operating on a voltage in excess of 250 volts shall be labeled for the voltage used in letters 3/4 inches high.

3011.15 Interior Alterations. Alterations or modifications of elevator car interiors shall comply with ASME A17.1, Section 8.7.2.15.2 (increase or decrease in deadweight of car), Building Code requirements concerning flame spread ratings for wall coverings (See Chapter 8), and lighting requirements of ASME A17.1.

3011.16 Illumination. Illumination in the elevator car shall be maintained unless it is turned off manually by the switch in the car. A readily-accessible and labeled toggle-type test switch shall be provided on the top of the car to cut lighting power manually and test the emergency lighting.

3011.17 Conveyance Number Designation. In any building with more than one elevator, escalator or other type of conveyance a designating number (not less than two inches in height) shall be located at the door of the main entrance lobby, inside the car, on the machine, on the disconnect switch or stop switch, and on escalator upper and lower front plates.

3011.18 Escalator Starting Switches. "Up" and "Down" positions shall be clearly indicated on all starting switches.

3011.19 Anchorage for Elevator Equipment. All elevator equipment, hydraulic or cable type shall be anchored.

3011.20 Restricted Opening of Doors. All existing passenger elevators in Group R, Division 1 hotels and dormitory buildings shall comply with the following.

ACTING CITY CLERK

1. When a car is outside the unlocking zone, the hoistway doors or car doors shall be so arranged that the hoistway doors or car doors cannot be opened more than 4 inches (102 mm) from inside the car.
2. When the car doors are so arranged that they cannot be opened when the car is outside the unlocking zone, the car doors shall be openable from outside the car without the use of special tools.
3. The doors shall be unlocked when the car is within 3 inches (76 mm) above or below the landing and may be configured to be unlocked up to 18 inches (457 mm) above or below the landing.

SECTION 3012 — RETROACTIVE REQUIREMENTS FOR EXISTING MATERIAL LIFTS

3012.1 General. Existing material lifts shall be made to comply with the following requirements. (Note: New material lifts shall comply with Section 3013).

3012.2 Hoistway Enclosure Gates and Doors. The openings at each material lift landing must have gates or doors that guard the full width of the opening. A hoistway door shall be vertically sliding, bi-parting, counter-balanced, or horizontally swinging or sliding. Gates and doors must meet the following requirements:

1. A balanced-type, vertically sliding hoistway gate shall extend from not more than two inches from the landing threshold to not less than sixty-six inches above the landing threshold.
2. A gate shall be solid or openwork of a design that will reject a ball two inches in diameter. A gate shall be located so that the distance from the hoistway face of the gate to the hoistway edge of the landing sill is not more than two and one-half inches. A gate shall be designed and guided so that it will withstand a lateral pressure of one hundred

ACTING CITY CLERK

pounds applied at approximately its center without breaking or being permanently deformed and without displacing the gate from its guides or tracks.

3. Hoistway gates or doors shall have a combination mechanical lock and electric contact, which shall prevent operation of the material lift by the normal operating devices unless the door or gate is closed.

3012.3 Controls.

1. The control station shall be remotely mounted so that it is inaccessible from the material lift car.
2. Controls shall be clearly marked or labeled to indicate the function of control.
3. All control stations shall have a stop switch. When opened, the stop switch shall remove the electrical power from the driving machine and brake. The stop switch shall:
   - 3.1 Be manually operated;
   - 3.2 Have red operating handles or buttons;
   - 3.3 Be conspicuously and permanently marked "STOP";
   - 3.4 Indicate the stop and run positions; and
   - 3.5 Be arranged to be locked in the open position.

3012.4 Capacity Posting and No-Riders Sign.

Each material lift shall have a capacity sign permanently and securely fastened in place in the material lift car and on the landings. The sign shall indicate the rated load of the material lift in pounds. The sign shall be metal with black letters two inches high on yellow background.

A sign stating "NO PERSONS PERMITTED TO RIDE THIS DEVICE" shall be conspicuously and securely posted on the landing side of all hoistway gates and doors and in the enclosure of each material lift car. The sign shall be metal with black letters two inches high on red background.

ACTING CITY CLERK

SECTION 3013 — REQUIREMENTS FOR NEW MATERIAL LIFTS.

New material lifts shall comply with ASME A17.1, Sections 2.7, 2.8 and 3.7 and the requirements of WAC 296–96 Part C1, Minimum Standards for All Material Lifts.

SECTION 3014 — EMERGENCY SERVICE FOR ELEVATORS IN EXISTING BUILDINGS - PHASE I RECALL.

3014.1 General. All existing elevators requiring Phase I recall when installed or under Chapter 93 of the Seattle Fire Code shall comply with this section.

EXCEPTIONS: 1. Elevators which comply with the standards for new installations as provided in Section 3018;

2. Elevators with less than 25 feet of travel when the building official and the fire code official give written approval; and
3. Elevators which comply with ASME A17.1, Rule 211.3a 1984 edition or later and Sections 3014.10 and 3014.11.

3014.2 Phase I Recall Keyed Switch. A three-position ("on", "off" and "by-pass") key cylinder switch shall be provided at each designated level within easy line of sight of the elevator controlled by the switch. Where additional switches are provided in a central control station they shall be two position ("off" and "on") key-operated switches.

3014.3 Keyed Cylinder-Type Switches. Keyed cylinder-type switches shall comply with the following:

1. Keys shall be removable only in the emergency ("on") and normal ("off") positions. Keys shall not be removable in the by-pass position.
2. One key shall be provided for each Phase I switch or key cylinder.
3. All emergency operation cylinders (Phases I and II) shall be keyed alike but such key shall not be a part of a building master key system.

3014.4 Key Location.

1. A key box meeting the standards of Section 3011.3 shall be provided at the designated recall floor above the Phase I recall switch. The key box is to be mounted approximately six feet above the floor. Other locations may be approved upon request.
2. When a central control station is provided, an additional set of keys shall be provided and hung in the control station in a location designated by the Fire Department. The keys shall be identified by a ring or paddle.

3014.5 Key Switch Functions.

1. The three positions of the switch shall be marked "by-pass", "off" and "on".
2. When the switch is in the "off" position, normal elevator service shall be provided and smoke detectors, where required, shall be functional.
3. When the switch is in the "by-pass" position, normal elevator service shall be restored independent of any required smoke detectors.
4. When the switch is in the "on" position, the elevators are in Phase I elevator recall mode.

3014.6 Phase I Automatic Recall Operation. When the Phase I recall switch is in the emergency ("on") position:

1. All cars controlled by this switch which are on automatic service shall return nonstop to the designated level and power-operated doors shall open and remain open.
2. A car traveling away from the designated level shall reverse at or before the next available floor without opening its doors.
3. A car stopped at a landing shall have the in-car emergency stop switch or in-car stop switch rendered inoperative as soon as the doors are closed and the car starts toward the designated level. A moving car, traveling to or away from the designated level, shall have the in-car emergency stop or in-car stop switch rendered inoperative immediately.

ACTING CITY CLERK

4. A car standing at a floor other than the designated level, with doors open and in-car emergency stop switch or in-car stop switch in the run position, shall conform to the following:

4.1 Elevators having automatic power-operated horizontally sliding doors shall close the doors without delay and proceed to the designated level;

4.2 Elevators having power-operated vertically sliding doors provided with automatic or momentary pressure closing operation in accordance with ASME A17.1 Rule 112.3d 1984 or later edition shall have the closing sequence initiated without delay in accordance with ASME A17.1 Rule 112.3d (1), (2), (3), and (5) 1984 or later edition, and the car shall proceed to the designated level;

4.3 Elevators having power-operated doors provided with continuous pressure closing operation per ASME A17.1 Rule 112.3b 1984 or later edition or elevators having manual doors shall conform to the requirements of Section 3014.7. Sequence operation, if provided, shall remain effective.

5. Door reopening devices for power-operated doors which are sensitive to smoke or flame shall be rendered inoperative. Mechanically actuated door reopening devices not sensitive to smoke or flame shall remain operative. Car door open buttons shall remain operative. Door closing shall conform to the requirements of ASME A17.1 Rule 112.5 1984 or later edition. Door hold open switches shall be rendered inoperative.

6. All car and corridor call buttons and all corridor door opening and closing buttons shall be rendered inoperative. All call register lights and directional lanterns shall be extinguished and remain inoperative. Position indicators, when provided, shall remain in service. All prior registered calls shall be canceled.

7. The activation of a smoke detector installed in accordance with Article 193 of the Seattle Fire Code in any elevator lobby or associated elevator machine room, other than the designated level, shall cause all cars in all groups that serve that lobby to return nonstop to the designated level. The fire code official may approve the connection of other detection devices to activate recall. The operation shall conform to the requirements of Phase I emergency recall operation. Whenever new elevator controllers are installed, they shall meet all provisions of the then current building and elevator codes. Newly-installed controllers shall have the capability of selecting alternate recall floors.

3014.7 Attendant-operated Recall Operation. Attendant-operated elevators shall be provided with visible and audible signals which alert the operator to return to the lobby when the car has been recalled under Phase I control.

3014.8 Dual Recall Operation. Elevators arranged for dual operation shall conform to all requirements for automatic operation and attendant operation as applicable.

3014.9 Inspection/Maintenance Recall Operation. During inspection operation the audible and visible signals required in Section 3014.7 will be actuated when the car has been recalled under Phase I control. The car shall remain under the control of the operator and/or car top station until the car is returned to service.

3014.10 Nurses' Preemption. Nurses' preemption (hospital service) may be allowed to commandeer up to one-half of the cars in a particular bank of elevators. At least one-half of the cars shall respond to Phase I and all cars not preempted shall respond.

3014.11 Operation Instruction. Instructions for operation of elevators under Phase I shall be incorporated with or adjacent to the Phase I switch at the designated level. Instructions for operation of elevators under Phase II shall be incorporated with or adjacent to the switch, in or adjacent to the operating panel in each car. In addition, Phase I operating instructions shall be adjacent to the Phase I switch in the fire control center and other approved locations.

ACTION OF CITY CLERK

Instructions shall be in letters not less than 1/8 inch (3.2 mm) in height and shall be permanently installed and protected against removal or defacement.

3014.12 Latching. All cars responding to Phase I Recall, activated by a smoke detector or other approved detection device, shall return to the appropriate recall floor as determined by the first detector recall signal received. No device, other than the Phase I switch, may override the first recall signal received. A later detection signal shall not change the recall floor. Smoke detector activation shall only be reset manually.

SECTION 3015 — EMERGENCY SERVICE FOR ELEVATORS IN EXISTING BUILDINGS - PHASE II HIGH RISE IN-CAR OPERATION

3015.1 General. Existing elevators in buildings having floors used for human occupancy located more than 75 feet above the lowest level of fire department vehicle access, or buildings having floors used for human occupancy 35 feet above grade, which lack fire department vehicle access to at least one side shall have Phase II in-car operation and shall comply with this section.

EXCEPTIONS: 1. Elevators which comply with the standards for new installations as provided in Section 3019;

2. Elevators with less than 25 feet of travel when the building official and fire code official give written approval; and
3. Elevators which comply with ASME A17.1 Rule 211.3c 1984 or later edition.

3015.2 Phase II In-Car Operation Key Switch.

1. A two-position ("off" and "on") key cylinder switch shall be provided in each elevator car.
2. The switch shall become effective only when the designated level Phase I switch is in the "on" position or a smoke detector has been activated and the car has returned to the designated level. The "on" position shall place the elevator in Phase II in-car operation.

ADOPTED CITY CLERK

3. The elevator shall be removed from Phase II operation only by moving the switch to the "off" position with the car at the designated level.
4. The switch shall be operable by the Phase I key and such key shall not be part of a building's master key system.
5. The key shall be removable only in the "off" position.
6. One key shall be provided for each Phase II switch or key cylinder.

3015.3 Key Location. See Section 3014.4 for the location of the keys.

3015.4 Designated Operator. The operation of elevators on Phase II emergency in-car operation shall be by trained emergency service personnel only.

3015.5 Car Operation Only. An elevator shall be operable only by a person in the car.

3015.6 Corridor Call Buttons and Directional Lanterns. All corridor call buttons and directional lanterns shall remain inoperative.

3015.7 Car and Hoistway Door Operation. The operation of car and hoistway doors shall comply with the following:

1. The opening of power-operated doors shall be controlled only by constant-pressure open buttons or switches.
2. If the constant-pressure open button or switch is released prior to the doors reaching the fully open position, the doors shall automatically reclose. Once doors are fully open, they shall remain open until signaled to close.
3. The closing of power-operated doors shall be by constant pressure of either the call button or door-close button. If a door-close button is supplied, it shall be operable.
4. If the constant-pressure close button or car call button is released prior to the doors reaching the fully closed position, the doors shall automatically reopen. Once doors are fully closed, they shall remain closed until signaled to open.

ACTING CITY CLERK

EXCEPTION: Momentary pressure control of doors using the sill trip-type operator may be permitted as existing; however, the doors must not open automatically upon arrival at a floor.

3015.8 Door Reopening Devices. Smoke-sensitive door reopening devices and door hold-open switches shall be rendered inoperative. Non-smoke-sensitive door reopening devices required to be operative under all other conditions may be rendered inoperative under Phase II in-car operation only if the doors are closed by constant pressure.

3015.9 Car Call Cancellation. All registered calls shall cancel at the first stop.

3015.10 Direction of Travel. Direction of travel and start shall be by the car call buttons. With doors in the closed position, actuation of the car call button shall select the floor, and start the car to the selected floor. If no door-close button is available, constant pressure of the car call button shall select the floor, close the door, and start the car to the selected floor.

EXCEPTION: On proximity-type car call buttons or any other type subject to false firing (calls being placed by line spikes, intermittent loss of power, etc.), the doors must be closed by a door-close button. Floors may be selected either before or after closing of the doors. The car will start only on the call button or door close button depending on which is the last device to be actuated.

3015.11 Motor Generator Time Out. The motor generator shall not time out automatically.

3015.12 Car Position Indicators. The car position indicators, when provided, shall be operative.

3015.13 Phase II Priority. Phase II operation shall override any floor calls keyed out for security reasons. Floor selection buttons shall be provided in the car to permit travel to all floors served by the car. Means which prevent the operation of these buttons shall be rendered inoperative.

3015.14 False Starts. The elevator shall not start with no calls registered.

3015.15 Terminal Runs. The elevator shall not make unprogrammed terminal runs.

ACTING CITY CLERK

3015.16 Loss of Power. Elevators on fire emergency Phase II car operation shall remain in their respective locations and in Phase II mode upon loss of power. They shall not move unless the elevator is under the control of the operator and power has been restored.

SECTION 3016 — NEW INSTALLATIONS - CONSTRUCTION STANDARDS

3016.1 General. All new elevators, escalators, moving walks and dumbwaiters and their installation shall conform to the requirements of ASME A17.1 as amended in this section and to the specific requirements of Sections 3017, 3018 and 3019. For elevator shaft requirements, see Section 707. Material lifts shall conform to WAC 296-96 Part C1, Minimum Standards for All Material Lifts.

3016.2 Wall Covering Material for Passenger Cars. Wall covering material for passenger cars shall comply with the following:

1. ASME A17.1 Section 2.14.
2. Seattle Building Code requirements concerning flame spread ratings for wall coverings and use of plastics. (See Chapter 8.)
3. WAC 296-96-23216, except that interior finish materials need not be firmly bonded flat to the enclosure and may be padded.

3016.3 Seismic Considerations. New installations shall comply with ASME A17.1 Section 8.4. The provisions for Seismic Zone 3 shall apply.

3016.4 Requirements to Accommodate People with Disabilities. All new elevators shall comply with Building Code Chapter 11. In addition, WAC 296-96-02300 through 02365 shall apply.

3016.5 Hoistway Smoke Control. The requirements of Section 3016.6 apply in addition to ASME A17.1 Section 2.1.4.

1. Hoistways of elevators shall be provided with means to prevent the accumulation of smoke and hot gases in case of fire.

ACTING CITY CLERK

2. When an elevator hoistway is pressurized and emergency or standby power is provided for the pressurization equipment under the provisions of Section 909, hoistway venting will not be required.
3. Pressurization.
   3.1 When pressurization is installed in elevator shafts, the pressurization of the shaft shall be measured with all elevator systems in recall mode, Phase I, and all cars at the designated recall level with the doors in the open position.
   3.2 Activation of pressurization may be delayed 30 seconds to allow elevator doors to close.
4. Unless specifically installed to serve that space only, environmental air systems and pressurization systems shall not be located in hoistways, elevator mechanical rooms and elevator machinery spaces.

   EXCEPTIONS: 1. Pressurization ducts serving a hoistway which are separated from the room or space by construction equal to the rated construction of the room or space and so located that all required clearances are maintained.

   2. Pressurization duct openings, dampers and grilles may be located in hoistway shaft walls provided the pressurization air does not impair the operation of the elevator.
5. Hoistways shall not be pressurized through pressurization of elevator machine rooms. The machine room floor between the hoistway and overhead machine room shall contain as few penetrations as possible. All penetrations for cable drops, etc., shall be held to a minimum size.
6. Elevator doors must operate properly when hoistway pressurization is in effect.
7. Ventilation louver operating motors shall not infringe on any elevator machinery or controller working clearances.

ACTING CITY CLERK

8. Hoistways shall be vented in accordance with the following:

8.1 Hoistways of elevators with more than 25 feet of travel from lowest floor level to highest floor level shall be provided with means for venting smoke and hot gases to the outer air in case fire or smoke is detected in the building.

EXCEPTION: Pressurized hoistways may be unvented.

8.2 Vents, if used, shall be located in the side of the hoistway enclosure directly below the machinery room floor or ceiling at the top of the hoistway, and shall open directly to the outer air or through noncombustible ducts to the outer air. Ducts must have the same rating as is required for the hoistway they are venting.

8.3 The area of the vents shall not be less than three and one-half percent of the area of the hoistway nor less than three square feet for each elevator car, whichever is greater. The required area of the vent is to be free area, unobstructed by louvers, etc.

8.4 When dampers are provided, they shall be of the normally-open type (open with power off). They shall be in the closed position unless power fails, or they are activated by fire alarm or approved smoke detection system.

3016.6 Elevator Operation on Emergency Power. All elevators required to be supplied with emergency power shall comply with the following:

1. Each elevator shall be transferable to the emergency power supply system.
2. Emergency power supply systems capable of handling all elevators on the premises need no sequencing or switching other than the possibility of staggering the restarting of the generators.
3. Emergency power supply systems whose capacity can only handle one elevator of a duplex or one elevator in each group of elevators shall comply with the following. (For

ACTING CITY CLERK

the purposes of this section, group is defined as all elevators serving the same portions of a building: highrise, midrise, lowrise, etc.)

3.1 All elevators on automatic operation shall be automatically assigned emergency power in sequence and returned to the Phase I recall or lobby floor, where they shall open their doors and then time out of service.

3.2 The last car down will generally be the selected car of a duplex or a group to remain in service. The service shall continue to be automatic.

3.3 The assignment of emergency power will skip or rotate past cars which may be out of service (emergency stop switch pulled, malfunction, car top operation, etc.). If assignment is made to a manual or attendant-operated car and the car is unattended, the system shall rotate past the car as though it is out of service.

4. The car and elevator machine room lights shall be activated on the emergency system.

5. A manual emergency power assignment switch or switches shall be in an elevator status panel located in the fire department central control station. Each elevator shall be capable of being assigned emergency power from this location. The manual switching shall be effective at all times other than when the cars are automatically sequencing to the lobby or when the selected car is traveling. The switch shall not remove power in midflight or with doors closed.

6. Elevators on Phase II car operation shall remain in their respective locations upon loss of power. They shall remain in Phase II mode and shall not move unless the elevator is under the control of the operator and normal power has been restored or emergency power has been assigned to the car by either automatic or manual means.

7. Loss of power and initiation of emergency power immediately after Phase I recall operation has occurred shall not cause any cars to be stranded in the building. Upon the application of emergency power to the equipment, the cars shall follow the normal

ACTING CITY CLERK

sequencing to the lobby, open their doors and time out of service. When all cars have been bypassed (out of service) or returned to the lobby, the assigned car shall then become available for firefighter's use on Phase II in-car operation.

8. Each elevator operating on emergency power shall be tested in accordance with applicable ASME A17.1-2000 Sections 2.16.8 and 2.26.10, and ASME A17.2-1985, Division 118. Note: Section 207.8 and Division 118 require the tests to be performed with 125 percent of rated load.
9. If the elevator cars are recalled to the alternate floor by Phase I recall and a loss of power occurs, the cars shall be sequenced to the alternate floor upon assignment of emergency power. The cars shall not go to the primary designated recall floor under these conditions. The alternate floor shall be provided with a means of identifying the elevator that is supplied with emergency power.
10. The elevator position indicator system when provided shall not become disoriented due to the loss of power or any other reason, however, upon the resumption of power, the car may move to reestablish absolute car position.
11. Communications to the car shall remain in service.

3016.7 Multiple Hoistways. The number of elevators permissible in a hoistway shall be in accordance with this subsection. See ASME A17.1 Section 2.1.1.4.

1. No more than four elevators may be in a single hoistway.
2. No more than three elevators serving all or the same portion of a building may be in a single hoistway.

   EXCEPTION: Four elevators serving all or the same portions of a building may be in a common hoistway under the following conditions:

   1. The hoistway is pressurized; and

ACTING CITY CLERK

2. Emergency generator power is available to serve both the elevators and pressurization equipment.

3016.8 Additional Doors. Doors other than the hoistway door and the elevator car door shall be prohibited at the point of access to an elevator car.

EXCEPTION: Doors which are readily openable from the car side without a key, tool, or special knowledge or effort.

3016.9 Key Retainer Box A key retainer box locked and keyed to the secure city access key for elevator access and operation keys shall be provided. The retainer box shall meet the following standards:

1. Minimum dimensions- 6 1/2 inches high, 6 inches wide, 2 inches deep
2. Material – at least 18 gauge steel welded
3. Color - red (unless located in the main lobby above the hall call button, 6 feet above the floor).
4. Labeling - "For Emergency Use"
5. Lock - high security Medeco lock specified by the building official. Use of the key shall be restricted to fire, emergency response and elevator inspection personnel.

The key box shall be flush or surface mounted, installed at the designated recall floor above the Phase I recall switch or in the main lobby above the hall call button where no recall feature exists. The key box is to be mounted approximately 6 feet above the floor. The box shall be attach to the building so as to be able to withstand a force of 300 lbf/square foot applied horizontally at any point. In buildings with more than one elevator, the key retainer box shall be large enough to accommodate all required keys. Other locations and custom box types may be approved by the building official upon request.

ACTING CITY CLERK

3016.10 Elevator Access Keys. Keys for access to and for the operation of elevator equipment shall be tagged and retained in the key box. The key box shall contain fire emergency service keys (Phase I and II, one key for each switch) and any or all of the following:

1. Machine room door;
2. Secondary level door;
3. Pit door;
4. Roof door;
5. Independent, hospital emergency and/or attendant operation;
6. Hoistway access;
7. Mechanical hoistway access devices (broken arm, lunar, etc.);
8. Miscellaneous switch keys;
9. Fire alarm panel room;
10. Sprinkler valve control room.

3016.11 Escalator Conveyance Number Designation. In any building with more than one escalator, a designating number (not less than two inches in height) shall be located on the upper and lower front plates.

3016.12 Elevator car to accommodate ambulance stretcher. In buildings four stories in height or more, at least one elevator shall be provided for fire department emergency access to all floors. Such elevator car shall be of such a size and arrangement to accommodate a 24-inch by 76-inch (610 mm by 1930 mm) ambulance stretcher in the horizontal, open position and shall be identified by the international symbol for emergency medical services (star of life). The symbol shall not be less than 3 inches (76 mm) high and shall be placed inside on both sides of the hoistway door frame.

ACTING CITY CLERK

SECTION 3017 — NEW INSTALLATIONS - GENERAL EMERGENCY OPERATION REQUIREMENTS

3017.1 General. All elevators shall conform to the requirements of this section and the specific requirements of Sections 3018 and 3019.

3017.2 Central Control Stations. The following criteria shall be met where buildings provide a fire command center in accordance with Section 911:

1. An additional two-position ("off" and "on") Phase I recall switch for each elevator or group as defined by Section 3018 shall be installed when the control station is not within easy line of sight of the lobby Phase I recall switches; the switch(es) shall be rotated clockwise to go from "off" to "on" position;
2. A car position indicator which shall be of a positive type that will not lose the car position nor need resetting on loss of power; however, upon the resumption of power, the car may move to reestablish absolute car position.
3. A telephone connection switch to elevator phones or a firefighter's phone jack connected to the fire control center;
4. A manual emergency power assignment switch;
5. A Phase I indicator;
6. A Phase II indicator.

3017.3 Nurses' Preemption. Nurses' preemption (hospital service) may be allowed to commandeer up to one-half of the cars in a particular bank of elevators. At least one-half of the cars shall respond to Phase I and all cars not preempted shall respond.

3017.4 Phase I and II Operation Instructions. Operation instructions shall be available in accordance with ASME A17.1 Section 2.27.7. In addition, Phase I operating instructions shall be adjacent to the Phase I switch in the fire control center and other approved locations.

ACTING CITY CLERK

SECTION 3018 — NEW INSTALLATIONS - PHASE I RECALL REQUIREMENTS

3018.1 ASME A17.1 Section 2.27.3 General. ASME A17.1 Section 2.27.3, Firefighters' Emergency Operations Service–Automatic Elevators, is superseded by the following.

Phase I emergency recall operation shall be provided for all elevators with fully automatic open and close power-operated doors.

3018.2 Section 2.27.3.1 Phase I Emergency Recall Operation. Elevators requiring Phase I recall emergency operation shall comply with ASME A17.1 Section 2.27.3.1 Phase I Emergency Recall Operation, and the following:

Groups of elevators containing four or more cars shall be provided with two, three-position key switches per group. A group shall be defined for the purpose of this section as all elevators serving the same portion of a building. Two-position ("off" and "on") switches may be provided in the fire control center where this code requires such a center. The switch(es) shall be rotated clockwise to go from "off" to "on" position. Hall call buttons common to a group will remain in service unless both Phase I recall switches of a four-car or larger group are placed in the recall mode, or a fire alarm recall signal is initiated.

SECTION 3019 — NEW INSTALLATIONS - PHASE II IN-CAR OPERATION REQUIREMENTS (ASME A17.1 SECTION 2.27.8)

Elevators requiring Phase II in-car operation shall comply with ASME A17.1 Section 2.27.8 Switch Keys, as amended below.

ASME 2.27.8 Switch Keys. The key switches required by 2.27.2 through 2.27.5 for all elevators in a building shall be operable by the same key. The keys shall be Group 3 Security (see 8.1). There shall be a key for each switch provided.

These keys shall be kept ~~on the premises in a location readily accessible to firefighters and emergency personnel, but not where they are available to the public. Where provided, a lock~~

ACTING CITY CLERK

~~box, including its lock and other components, shall conform to the requirement of UL 1037 (see Part 9)~~ in the key retainer box as required by Section 3016.10.

SECTION 3020 NEW INSTALLATIONS - CONSTRUCTION OF HOISTWAYS AND MACHINE ROOMS

3020.1 Construction of hoistways. All new elevator hoistways shall be of fire-resistance-rated construction when required by Section 707. ASME A17.1 Sections 2.1.1.1 2.1.1.1, 2.7.1.1, and 2.7.1.2 are superseded by this section.

Hoistways not required to be of fire-resistance-rated construction shall comply with ASME A17.1 Section 2.1.1.2 as amended below.

ASME 2.1.1.2 Non-Fire-Resistive Construction

ASME 2.1.1.2.1 Where fire-resistive construction is not ~~required by the building code~~ provided, hoistway construction shall conform to 2.1.1.2.2 or 2.1.1.3.

ASME 2.1.1.2.2 The hoistway shall be fully enclosed ~~conforming to 2.1.1.2.2(a), (b), and (c), or 2.1.1.2.2(a) and (d).~~

~~(a) Enclosures and doors shall be unperforated to a height of 2 000 mm (79 in.) above each floor or landing and above the treads of adjacent stairways. The enclosure shall be unperforated, adjacent to, and for 150 mm (6 in.) on either side of any moving equipment that is within 100 mm (4 in.) of the enclosure.~~

~~(b) Openwork enclosures, where used above the 2 000 mm (79 in.) level, shall reject a ball 25 mm (1 in.) in diameter.~~

~~(c) Openwork enclosures shall be~~

~~(1) at least 2.2 mm (0.087 in.) thick wire, if of steel wire grille;~~

~~(2) at least 2.2 mm (0.087 in.) thick, if of expanded metal; and~~

~~(3) so supported and braced as to deflect not over 15 mm (0.6 in.) when subjected to a force of 450 N (100 lbf) applied horizontally at any point.~~

ACTING CITY CLERK

~~(d)~~ Enclosures shall be permitted to be glass, provided it is laminated glass conforming to ANSI Z97.1, 16 CFR Part 1201, or CAN/CGSB-12.1, whichever is applicable (see Part 9). Markings as specified in the applicable standard shall be on each separate piece of glass and shall remain visible after installation.

ASME 2.1.1.2.3 Entrances shall be in conformance with 2.11, except 2.11.14, 2.11.15, 2.11.16, and 2.11.18.

3020.2 Elevator equipment and machine rooms. Elevator controls and machinery other than driving machines and governors shall be located in a room dedicated exclusively to elevator equipment. Listed electrical equipment that serves the machine room is permitted to be installed in machine rooms. Air conditioning equipment is permitted to be installed in machine rooms in accordance with ASME A17.1 Section 2.8.4.

Elevator equipment and machine rooms shall be enclosed by fire barriers with at least a one-hour fire-resistance rating. Machine rooms in high-rise buildings shall have a fire-resistance rating at least equal to that required for the hoistway.

3020.3 Machine Room Construction for Hydraulic Elevators. All machine rooms and machinery spaces for hydraulic elevators shall comply with ASME A17.1 Section 3.7, Machine Rooms and Machinery Spaces, as amended below:

ASME 3.7 Machine Rooms and Machinery Spaces. Machine rooms and machinery spaces <u>for hydraulic elevators</u> shall conform to 2.7.1 through 2.7.5 and 2.7.7 <u>as amended by this code</u>. <u>Machine rooms for hydraulic elevators shall comply with Section 3020.2.</u>

ASME 3.7.1 Location of Machine Rooms. Hydraulic elevator machine and control rooms ~~may~~ <u>shall be permitted to</u> be located overhead, adjacent to, underneath the hoistway, or at a remote location. They shall not be located in the hoistway.

Where hydraulic machines and electrical control equipment are located in spaces separated from the hoistway enclosure (see 2.1.1 <u>and 3020.1</u>), such spaces shall be separated from other

ACTING CITY CLERK

parts of the building by enclosures conforming to 2.7.1.2 ~~and having an access door conforming to 2.7.3.4~~ as amended by this code.

3020.4 Working Clearances. The following working clearances shall be provided inside the equipment or machinery room for all elevators.

1. The width of working space in front of controllers shall be the width of the controller or 30 inches whichever is greater. The depth of the working space in the direction of access shall be not less than 48 inches.
2. The minimum clear space working clearances for free-standing equipment shall be 18 inches on two sides and between units of controllers, selectors and/or walls or other building obstructions. The 18 inch side clearance may be combined to permit 36 inches clear on one side only.
3. The minimum space at the rear of controllers with back-wiring, terminals or other elements requiring access shall be 36 inches.
4. The working space shall be free of pipes, vents, storage, ducts or any other obstruction.

   Exception: Space outside elevator equipment and machine rooms is permitted to be used to provide working clearance required for the front of controllers for rooms containing only elevator controls. Where the space outside the room serves as a means of egress, not more than one-half the required egress width shall overlap the working clearance.

3020.5 Machinery Rooms for Private Residence Elevators. Machinery Rooms for private residence elevators shall comply with ASME A17.1 Sections 2.7, 2.8 and 3.7.

SECTION 3021 - NEW INSTALLATIONS - CONSTRUCTION OF FLOORS (ASME 17.1, SECTION 2.1.3.4)

All new elevator hoistways and machine rooms shall comply with ASME A17.1 Section 2.1.3.4, Construction of Floors, as amended below.

ACTING CITY CLERK

ASME 2.1.3.4 Construction of Floors. Floors shall be ~~of concrete or metal construction with or~~ without perforations. ~~Metal floors shall conform to the following.~~

~~(a) If of bar-type grating, the openings between bars shall reject a ball 20 mm (0.8 in.) in diameter.~~

~~(b) If of perforated sheet metal or of fabricated openwork construction, the openings shall reject a ball 25 mm (1 in.) in diameter.~~

SECTION 3022 — INSTALLATION OF PIPES OR DUCTS CONVEYING GASES, VAPORS OR LIQUIDS OR ELECTRICAL WIRING IN HOISTWAYS, MACHINE ROOMS OR MACHINERY SPACES (ASME A17.1 SECTION 2.8.2)

3022.1 Prohibited Wiring, Pipes and Ducts. In accordance with ASME A17.1 Sections 2.8.1 and 2.8.2, non-elevator electric wiring, pipes and ducts are prohibited in elevator machine rooms and hoistways except as otherwise provided in this section. The use of false ceilings and furring does not remove such items from the elevator spaces and shall not be acceptable except as allowed by ASME A17.1 Section 2.8.2 as amended below.

3022.2 All elevator hoistways and machine rooms shall comply with ASME A17.1 Section 2.8.2, Pipes, Ducts, Tanks, and Sprinklers, as amended below:

ASME 2.8.2 Pipes, Ducts, Tanks, and Sprinklers

2.8.2.1 ~~Steam and hot water p~~ Pipes conveying gases, vapors or liquids ~~shall be~~ are not permitted to be installed in hoistways, machine rooms, and machinery spaces unless necessary for operation or maintenance of the elevator and not used for any other purpose. ~~for the purpose of heating these areas only, subject to the requirements of 2.8.2.1.1 through 2.8.2.1.3~~.

Exception: Subject to the approval of the building official, pipes protected with double containment and pipes with threaded or welded joints may be permitted. Pipes shall not be located less than 7 feet above the floor in machine rooms.

ACTING CITY CLERK

~~**2.8.2.1.1** Heating pipes shall convey only low pressure steam [100kPa (15 psi) or less] or hot water [100° C (212° F) or less].~~

~~**2.8.2.1.2** All risers and return pipes shall be located outside the hoistway. When the machine room is located above the roof of the building, heating pipes for the machine room shall be permitted to be located in the hoistway between the top floor and the machine room.~~

~~**2.8.2.1.3** Traps and shutoff valves shall be provided in accessible locations outside the hoistway.~~

2.8.2.2 Ducts shall be permitted to be installed in the hoistway, machine room, and machinery space for the purpose of heating, cooling, ventilating, and venting these areas only and shall not encroach upon the required clearances.

Ducts and electrical conduit may pass through an elevator machine room or machinery space provided they are separated from the room or space by construction equal to the rated construction of the room or space and so located that all required clearances are maintained.

2.8.2.3 Sprinkler systems conforming to NFPA 13 ~~or the NBCC, whichever is applicable (see Part 9)~~ shall be permitted to be installed in hoistway, machine room, and machinery spaces, subject to ~~the requirements of 2.8.2.3.1 through 2.8.2.3.4~~ rules promulgated by the building official.

~~**2.8.2.3.1** All risers and returns shall be located outside these spaces. Branch lines in the hoistway shall supply sprinklers at not more than one floor level. When the machine room is located above the roof of the building, risers, return pipes, and branch lines for the machine room sprinkler(s) shall be permitted to be located in the hoistway between the top floor and the machine room.~~

~~**2.8.2.3.2** In jurisdictions not enforcing the NBCC, means shall be provided to automatically disconnect the main line power supply to the affected elevator upon or prior to the application of water from sprinklers located in the machine room or in the hoistway more than 600 mm~~

ACTING CITY CLERK

~~(24 in.) above the pit floor. This means shall be independent of the elevator control and shall not be self-resetting. The activation of sprinklers outside of the hoistway or machine room shall not disconnect the main line power supply.~~

~~**2.8.2.3.3** Smoke detectors shall not be used to activate sprinklers in these spaces or to disconnect the main line power supply.~~

~~**2.8.2.3.4** In jurisdictions not enforcing the NBCC, when sprinklers are installed in the hoistway all electrical equipment, except earthquake protective devices conforming to 8.4.10.1.2(d), located less than 1225 mm (48 in.) above the pit floor, shall be~~

~~(a) weatherproof (NEMA4); and~~

~~(b) wiring shall be identified for use in wet locations in accordance with the requirements in NFPA 70.~~

2.8.2.4 Other pipes or ducts conveying gases, vapors, or liquid and not used in connection with the operation of the elevator shall not be installed in any hoistway, machine room, or machinery space. Where a machine room or hoistway or both extend above the roof of a building, pipes shall be permitted from roof drains to the closest point where they can be diverted out of this space. Pipes shall be covered to prevent leakage or condensate from entering the machine room or hoistway.

2.8.2.5 Where permitted and provided, pipes, drains, and tanks, or similar equipment that contains liquids, shall not be located directly above the elevator equipment and shall not encroach upon the required clearances in the hoistway, machine room, or machinery spaces.

SECTION 3023 — ACCESS TO PITS (ASME A17.1 SECTION 2.2.4)

All pits shall comply with ASME A17.1 Section 2.2.4 as amended below:

ASME 2.2.4 Access to Pits. Safe and convenient access shall be provided to all pits, and shall conform to 2.2.4.1 through 2.2.4.4.

ACTING CITY CLERK

2.2.4.1 Access shall be by means of the lowest hoistway door or by means of a separate pit access door.

2.2.4.2 There shall be installed in the pit of each elevator, where the pit extends more than 900 mm (35 in.) below the sill of the pit access door, a fixed vertical ladder of noncombustible material, located within reach of the access door unlocking device. The ladder shall extend not less than 1 200 mm (48 in.) above the sill of the access door. The rungs, cleats, or steps shall be a minimum of 400 mm (16 in.) wide. When unavoidable obstructions are encountered, the width shall be permitted to be decreased to less than 400 mm (16 in.). The reduced width shall be as wide as the available space permits, but not less than 225 mm (9 in.) wide. The rungs, cleats, or steps shall be spaced 300 mm (12 in.) on center. A clear distance of not less than 180 mm (7 in.) from the centerline of the rungs, cleats, or steps to the nearest permanent object in back of the ladder shall be provided. When unavoidable obstructions are encountered, the distance shall be permitted to be reduced to 115 mm (4.5 in.). Siderails, if provided, shall have a clear distance of not less than 115 mm (4.5 in.) from their centerline to the nearest permanent object. The nearest point of the ladder shall be within 1 000 mm (39 in.), measured horizontally from the means to unlock the egress door from the pit.

Pit access by a ladder shall not be permitted when the pit floor is more than 3 000 mm (120 in.) below the sill of the access door except where there is no building floor below the bottom terminal landing, this height shall be permitted to be greater but not more than 4 200 mm (165 in.).

2.2.4.3 Pits shall be accessible only to elevator personnel.

2.2.4.4 Separate pit door, when provided, shall be subject to the following requirements:

(a) If the door swings into the pit, it shall be located so that it does not interfere with moving equipment.

ACTING CITY CLERK

(b) If the door swings out, and the lowest structural or mechanical part, equipment, or device installed beneath the car platform, except guide shoes or rollers or safety jaw assemblies, projects below the top of the separate pit access door opening when the car is level with the bottom terminal landing

(1) an electric contact conforming to 2.26.2.26 shall be provided to prevent operation of the elevator when the door is open; and

(2) the door shall be provided with a vision panel(s) that is glazed with clear wired glass not less than 6 mm (0.25 in.) thick, will reject a ball 150 mm (6 in.) in diameter, and have an area of not more than 0.03 m^2 (47 $in.^2$).

(c) The door shall provide a minimum opening of 750 mm (29.5 in.) in width and ~~1 825~~ 2 032 mm (~~72~~ 80 in.) in height.

(d) The door shall be equipped with a barrier conforming to 2.11.1.2(i), where the door sill is located more than 300 mm (12 in.) above the pit floor.

(e) The door shall be self-closing and provided with a spring-type lock arranged to permit the door to be opened from inside of the pit without a key. Such doors shall be kept closed and locked. The key shall be of Group 1 Security (see 8.1).

(f) Separate pit access doors shall not be located where a person, upon entering the pit, can be struck by any part of the car or counterweight when either is on its fully compressed buffer.

(g) Permanent noncombustible platforms for safe access and maintenance to the underside of elevator cars shall be provided where pit depths exceed 8 feet as approved by the building official.

SECTION 3024 — SUPPLY LINE SHUTOFF VALVE (ASME A17.1 SECTION 3.19.4.1)

All hydraulic elevators shall comply with ASME A17.1 Section 3.19.4.1, Shutoff Valve, as amended below:

ACTING CITY CLERK

ASME 3.19.4.1 Shutoff Valve. A manually operated shutoff valve shall be provided between the hydraulic machines and the hydraulic jack and shall be located outside the hoistway and adjacent to the hydraulic machine on all hydraulic elevators. An additional shutoff valve may be provided in the pit.

SECTION 3025 — GUARDS AT CEILING INTERSECTION (ASME A17.1 SECTION 6.1.3.3.9)

All escalators shall comply with ASME A17.1 Section 6.1.3.3.9, Guard at Ceiling Intersection, WAC 296-96-23410, and the following:

Guards shall be provided at any pinching, snagging or wedging points between the handrail, balustrade and adjacent building components or equipment when such points are within the clearances delineated in 6.1.3.3.9.

SECTION 3026 —TEST REPORTS

When tests are required by ASME 17.1, Part 8, as amended in this code, immediately after tests are completed all test results shall be submitted to the building official for approval on forms furnished by the building official. The submitted results shall be completed and signed by the person performing the tests and shall identify the testing firm. Copies of the completed forms shall be provided to the owner.

SECTION 3027 —ACCEPTANCE INSPECTIONS AND TESTS

Inspections and tests shall comply with ASME A17.1 Section 8.10.1, Acceptance Inspection and Tests, except as amended below.

ASME 8.10.1 General Requirements for Acceptance Inspections and Tests

8.10.1.1 Persons Authorized to Make Acceptance Inspections and Tests.

8.10.1.1.1 The acceptance inspection shall be made by an inspector employed by the building official ~~authority having jurisdiction, or by a person authorized by the authority having jurisdiction~~.

ACTING CITY CLERK

8.10.1.1.2 The person installing or altering the equipment shall perform all of the tests required by 8.10.2 through 8.10.5 of ASME A17.1 in the presence of the inspector specified in 8.10.1.1.1.

~~**8.10.1.1.3** The inspector shall meet the qualification requirements of the ASME QEI-1. Inspectors and inspection supervisors shall be certified by an organization accredited by ASME in accordance with the requirements of ASME QEI-1. Requirement 8.10.1.1.3 does not apply in Canadian jurisdictions.~~

SECTION 3028 — PERIODIC INSPECTIONS AND TESTS

3028.1 Persons authorized to make periodic inspections and tests. Periodic inspection and tests shall comply with ASME A17.1 Section 8.11.1 except that Section 8.11.1.1 shall not apply.

3028.2 Intervals for periodic inspections and tests. Sections 8.11.2 (electric elevators), 8.11.3 (hydraulic elevators), 8.11.4 (escalators and moving walks) and 8.11.5 (other equipment) shall be performed at intervals specified in Table 3029.

3028.3 Category One Tests. The tests required by ASME A17.1 Sections 8.11.2.2.1 through 8.11.2.2.4 shall be performed with rated load in the car.

3028.4 Category Five Tests. Elevators shall be subject to five-year inspection test requirements in accordance with ASME A17.1 Section 8.11.2.3, Periodic Test Requirements – Category Five, except that safety and governor systems of cars operating on wood guide rails shall be tested by tripping the governor by hand with rated load in the car, and the car at rest.

SECTION 3029 — PERIODIC INSPECTION AND TESTS OF ESCALATORS AND MOVING WALKS (ASME A17.1 SECTION 8.11.4.2)

In addition to the routine inspection and tests required by ASME A17.1 Section 8.11.4.2, a certificate of cleaning the escalator trusses and pan shall be performed.

The step/skirt performance index test specified in 8.11.4.2.19 shall be required for all periodic escalator and moving walk for with tests due on or after August 1, 2005.

ACTING CITY CLERK

Table 3029 Inspection and Test Intervals
Note: Intervals are specified in months

				Periodic Tests					
		Periodic Inspections		Category One		Category Three		Category Five	
Section	Equipment Type	Requirement	Interval	Requirement	Interval	Requirement	Interval	Requirement	Interval
8.11.2	Electric elevators	8.11..2.1	12	8.11.2.2	12	N/A	N/A	8.11.2.3	60
8.11.3	Hydraulic elevators	8.11.3.1	12	8.11.3.2	12	8.11.3.3	36	8.11.3.4	60
8.11.4	Escalators & moving walks	8.11.4.1	12	8.11.4.2	24	N/A	N/A	N/A	N/A
8.11.5.3	Hand elevators	8.11.2.1	12	8.11.2.2	12	N/A	N/A	8.11.2.3, 8.11.3.4	60
8.11.5.4; 8.11.5.5	Dumbwaiters	8.11.2.1, 8.11.3.1	12	8.11.2.2, 8.11.3.2	12	8.11.3.3	36	8.11.2.3, 8.11.3.4	60
8.11.5.5	Material lifts and dumbwaiters with automatic transfer devices	8.11.2.1, 8.11.3.1	12	8.11.2.2, 8.11.3.2	12	8.11.3.3		8.11.2.3, 8.11.3.4	60
8.11.5.6	Special purpose personnel elevators	8.11.2.1, 8.11.3.1	12	8.11.2.2, 8.11.3.2		8.11.3.3		8.11.2.3, 8.11.3.4	60
8.11.5.7	Inclined elevators	8.11.2.1, 8.11.3.1	12	8.11.2.2, 8.11.3.2		8.11.3.3		8.11.2.3, 8.11.3.4	60
8.11.5.9	Screw-column elevators	8.11.2.1, 8.11.3.1	12	8.11.2.2, 8.11.3.2		8.11.3.3		8.11.2.3, 8.11.3.4	60
8.11.5.10	Rooftop elevators	8.11.2.1, 8.11.3.1	12	8.11.2.2, 8.11.3.2		8.11.3.3		8.11.2.3, 8.11.3.4	60
8.11.5.12	Limited use/limited application elevators	8.11.2.1, 8.11.3.1	12	8.11.2.2, 8.11.3.2		8.11.3.3		8.11.2.3, 8.11.3.4	60

ACTING CITY CLERK

Section 187. Section 3103 of the International Building Code, 2003 Edition, is amended as follows:

3103.1 See Section 106.10. ((~~**General.** The provisions of this section shall apply to structures erected for a period of less than 180 days. Tents and other membrane structures erected for a period of less than 180 days shall comply with the *International Fire Code*. Those erected for a longer period of time shall comply with applicable sections of this code.~~

~~**Exception:** Provisions of the *International Fire Code* shall apply to tents and membrane structures erected for a period of less than 180 days.~~

~~**3103.1.1 Permit required.** Temporary structures that cover an area in excess of 120 square feet (11.16 m^2), including connecting areas or spaces with a common means of egress or entrance which are used or intended to be used for the gathering together of 10 or more persons, shall not be erected, operated or maintained for any purpose without obtaining a permit from the building official.~~

~~**3103.2 Construction documents.** A permit application and construction documents shall be submitted for each installation of a temporary structure. The construction documents shall include a site plan indicating the location of the temporary structure and information delineating the means of egress and the occupant load.~~

~~**3103.3 Location.** Temporary structures shall be located in accordance with the requirements of Table 602 based on the fire resistance rating of the exterior walls for the proposed type of construction.~~

~~**3103.4 Means of egress.** Temporary structures shall conform to the means of egress requirements of Chapter 10 and shall have a maximum exit access travel distance of 100 feet (30 480 mm).~~))

Section 188. Subsection 3104.6 of the International Building Code, 2003 Edition, is amended as follows:

ACTING CITY CLERK

3104.6 Public way. Pedestrian walkways over a public way shall also comply with ((~~Chapter 32~~)) the Street Use Code, Seattle Municipal Code Title 15.

Section 189. Section 3105 of the International Building Code, 2003 Edition, is amended as follows:

((~~**3105.1 General.** Awnings or canopies shall comply with the requirements of this section and other applicable sections of this code.~~

~~**3105.2 Definition.** The following term shall, for the purposes of this section and as used elsewhere in this code, have the meaning shown herein.~~

~~**RETRACTABLE AWNING.** A retractable awning is a cover with a frame that retracts against a building or other structure to which it is entirely supported.~~

~~**3105.3 Design and construction.** Awnings and canopies shall be designed and constructed to withstand wind or other lateral loads and live loads as required by Chapter 16 with due allowance for shape, open construction and similar features that relieve the pressures or loads. Structural members shall be protected to prevent deterioration. Awnings shall have frames of noncombustible material, fire-retardant treated wood, wood of Type IV size, or 1-hour construction with combustible or noncombustible covers and shall be either fixed, retractable, folding or collapsible.~~

~~**3105.4 Canopy materials.** Canopies shall be constructed of a rigid framework with an approved covering, that is flame resistant in accordance with NFPA 701 or has a flame spread index not greater than 25 when tested in accordance with ASTM E 84.~~

3105.1 Scope. All awnings and canopies are subject to the requirements of this section. Awnings and canopies containing electrical wiring and light fixtures are also subject to the Seattle Electrical Code. Awnings and canopies over a public place shall comply with the Street and Sidewalk Use Ordinance (Title 15, Seattle Municipal Code).

ACTING CITY CLERK

3105.2 DEFINITIONS. For the purposes of this chapter, certain terms are defined as follows:

AWNING is a protective covering with a nonrigid surface projecting from a building.

AWNING SIGN is a sign applied to the surface of an awning or canopy.

CANOPY is a protective covering with a rigid surface projecting from a building. Marquees are a type of canopy.

FIRE-RETARDANT COVERING is a material which has a flame spread rating of less than 15 when tested to ASTM E84.

SIGN. See Section 3107.3.

VENEER. See Section 1402.1.

3105.3 Permits

3105.3.1 Permits required. No awning or canopy shall be erected, constructed, altered or structurally revised without a permit issued by the building official, except as specifically exempted in Section 106.2.

A sign/awning permit shall be required for an awning or canopy specific to any business entity. A single permit may be issued for a single awning or canopy which serves a multi-tenant building. A single permit may be issued for all awning signs for each business entity installed concurrently. Awning signs for separate business entities must have a separate sign permit whether or not located on a separate awning. Subsequent installation of an awning, canopy or awning sign shall require a separate permit.

Painting, cleaning, repair and other maintenance shall not require a permit unless a structural change is made or the awning is covered with new fabric.

3105.3.2 Permit application. To obtain a permit as required by this chapter, the applicant shall file an application which shall include the following:

1. The location of the proposed awning or canopy on the building;
2. Plans or drawings and specifications;
3. Signature of the building owner or an authorized agent;

ACTING CITY CLERK

4. Permit fee as specified in the Fee Subtitle.

3105.4 Maintenance. All awnings and canopies, together with their supports, braces and anchors, shall be kept in good repair and in a proper state of preservation. The surface of all awnings and canopies shall be kept clean and protected with a sealer-type solution. The building official may order the removal of any awning or canopy not properly maintained or no longer in use and may revoke the permit.

3105.5 Materials. Awnings shall have approved fire-retardant coverings. Frames shall be of materials allowed for the type of construction of the building, except that aluminum frames are allowed with all construction types.

3105.6 Welding. All structural welding shall conform to the requirements of Chapter 20 for aluminum and Chapter 22 for steel.

3105.7 Electric signs and lights. No electric sign, including a neon assembly, shall be attached to, or located on, any part of the frame of an awning.

Where light fixtures are attached to an awning or canopy, adequate bracing shall be designed and installed to sustain the additional loads imposed by the weight of the fixtures.

Lamps shall be located at least 12 inches (305 mm) from combustible material.

3105.8 Obstruction of exits, light and ventilation. No portion of the surface or support of an awning or canopy, including a retracted awning, shall interfere with the free use of a fire escape, exit or standpipe.

Awnings and canopies shall not reduce the light or ventilation to any occupancy below requirements of Chapter 12 of this code.

3105.9 Location. All portions of awnings and canopies shall be at least 8 feet (2438 mm) above any walking surface immediately below.

All portions of awnings and canopies located over public property shall be at least 8 feet (2438 mm) above grade and at least 2 feet (610 mm) from the curb.

ACTING CITY CLERK

Awnings and marques shall be located where they will not obstruct, obscure or interfere with any publicly maintained street tree, streetlight or utility pole.

3105.10 Supports. The supports for awnings and canopies shall be located on private property.

Exception: Where approved by the Director of Transportation, stanchions for awnings located at the entrance to buildings may be installed on public property if they are located in line with other street furniture. Individual stanchions shall have a cross sectional dimension or diameter no greater than 6 inches (152 mm).

3105.11 Drainage. Awnings and canopies shall be provided with conductors for water which shall drain back to the building line and be connected to a sewer or, if approved by the Director of Seattle Public Utilities, to a dry well or under a sidewalk to a gutter.

Exception: Awnings and canopies may drain away from the building line, provided the water drains uniformly over the edge. The upper surface of canopies shall be sloped a minimum of 1 unit vertical in 48 units horizontal (2% slope). Awnings and canopies complying with this exception may drain onto the public right of way.

3105.12 Design loads. Awnings and canopies shall be designed and constructed to resist all forces to which they are subject as specified in Chapter 16.

3105.13 Pitch. The upper surface of all awnings shall have a pitch of at least thirty degrees from the horizontal. The building official may approve awnings with a smaller pitch when the design is prepared by a licensed structural engineer.

3105.14 Attachment of awnings. All awnings attached to masonry, concrete or steel shall be safely secured with steel anchors and bolts, or approved rated expansion bolts of sufficient size and anchorage to support the loads safely. No support or attachment for an awning or canopy shall be connected to, supported by, or fastened to exterior veneer.

3105.15 Size. Where an awning or canopy is located at an exit door from a stairway or exit passageway that is fire-resistance-rated, the distance the awning or canopy projects from the

ACTING CITY CLERK

building shall be no more than one-half the distance from the walking surface to the lowest point of the bottom of the awning or canopy.

Section 190. Section 3106 of the International Building Code, 2003 Edition, is repealed.

Section 191. Subsection 3107 of the International Building Code, 2003 Edition, is amended as follows:

((~~**3107.1 General.** Signs shall be designed, constructed and maintained in accordance with this code.~~))

3107.1 Purpose. It is the purpose of this chapter to safeguard the life, health, property and welfare of the citizens of the City by regulating and controlling the design, quality of materials, construction, location, illumination, and maintenance of signs and sign structures visible from any portion of public property or rights-of-way.

3107.2 Enforcement

3107.2.1 Authority. The building official is hereby authorized and directed to enforce all of the provisions of this chapter, Chapter 23.55 of the Land Use Code relating to signs erected and maintained on private property. The Director of Transportation and the building official shall enforce the provisions of this chapter and Chapter 23.55 of the Land Use Code as it relates to signs over public places as defined in Section 15.02.040 of the Seattle Municipal Code.

Signs erected without permit as required by Section 3107.4 which do not conform to the provisions of this chapter and Chapter 23.55 of the Land Use Code, shall be removed upon notification in writing by the building official.

3107.2.2 Other requirements. All signs shall comply with any additional regulations as to type, height, clearance, size, copy, design and location imposed by the Land Use Code, and

ACTING CITY CLERK

Title 15, Seattle Municipal Code, Street and Sidewalk Use, as amended, and other ordinances of the City. Signs which are not regulated by the Land Use Code may be subject to requirements of this chapter.

3107.3 Definitions. For the purposes of this chapter, certain terms shall be defined as follows:

BILLBOARD is a ground, wall, or roof sign erected, constructed, or maintained for the purpose of displaying outdoor advertising by means of pictorial or reading matter attached thereto or posted thereon and available by means of rental to persons other than the owner of the sign.

BUILDING FACADE is that portion of any exterior elevation of a building extending from the grade of the building to the top of the parapet wall or eaves, for the entire width of the building elevation.

BUILDING FACADE FACING is a resurfacing of an existing facade with approved material.

BULLETIN BOARD is a board for messages for users of the premises on which the board is erected and not intended for view from the public right-of-way. A bulletin board is not a sign.

DISPLAY SURFACE is the area of a sign structure used to display the advertising message.

ELECTRIC SIGN is any sign containing electrical wiring, but not including signs illuminated by an exterior light source.

FABRIC SIGN is a sign made of canvas, cloth or similar non-rigid material.

NONSTRUCTURAL TRIMS are the moldings, battens, caps, nailing strips, latticing or cutouts which are attached to the sign structure.

ON-PREMISE DIRECTIONAL SIGN is an on-premise incidental sign designed to direct pedestrian or vehicular traffic.

ON-PREMISE SIGN is a sign used solely by the business establishment on the lot where the sign is located which displays either (1) commercial messages which are strictly applicable only to a use of the premises on which it is located, including signs or sign devices indicating the business transacted, principal services rendered, goods sold or produced on the premises,

ACTING CITY CLERK

name of the business, and name of the person, firm or corporation occupying the premises or (2) noncommercial messages. This definition shall not include signs located within a business establishment except signs oriented so as to be visible through a window.

PORTABLE SIGN is a sign which is not permanently affixed and is designed for or capable of being moved, except those signs explicitly designed for people to carry on their persons or which are permanently affixed to motor vehicles.

PROJECTING SIGN is a sign other than a wall sign, which is rigidly constructed and projects from and is supported by a wall of a building or structure.

PROJECTION is the distance by which a sign extends over public property or beyond the building line.

ROOF SIGN is a sign erected upon or above a roof or parapet of a building or structure.

SIGN is any medium, including its structure and component parts, which is used or intended to be used to attract attention to the subject matter for advertising, identification or informative purposes.

SIGN STRUCTURE is any structure which supports or is designed to support any sign as defined in this chapter. A sign structure may be a single pole or may be an integral part of the building.

WALL SIGN is any sign attached to and supported by a wall of a building or structure, with the exposed face of the sign on a plane parallel to the plane of the wall.

3107.4 Permits required

3107.4.1 Permanent signs. No sign shall be erected, re-erected, constructed, painted, posted, applied, altered, structurally revised or repaired, except as provided in this chapter and Chapter 23.55 of the Land Use Code and pursuant to a permit issued by the building official.

A separate permit shall be required for a sign or signs for each business entity and/or a separate permit for each group of signs on a single supporting structure installed

ACTING CITY CLERK

simultaneously. Thereafter, each additional sign erected on the structure must have a separate permit, including electric signs. In addition, electrical permits shall be obtained for circuits for electric signs and street use permits shall be obtained for signs over any public place pursuant to the Street Use Ordinance as amended.

EXCEPTION: The following sign activity shall not require a permit, provided the owner of any such sign shall continue to have the responsibility of erection and maintenance of such sign and for compliance with the provisions of this chapter and any other law or ordinance regulating signs:

1. Signs which are located within the interior of the building and which are not visible from the public right-of-way unless:
   - 1.1 The sign is mounted within an interior shared pedestrian mall of a multi-tenant retail facility; located over or adjoining the pedestrian walking surface; and
   - 1.2. When any individually mounted element of the sign is greater than 10 square feet in area or when it is an electric sign;
2. The changing of the advertising copy or message on a lawfully erected painted or printed sign, theater marquee, gasoline price sign or similar sign specifically designed for the use of replaceable copy;
3. Painting, repainting, cleaning, repairing, and other normal maintenance unless a structural or electrical change is made;
4. One business identification sign, nonelectrical and non-illuminated, 1-1/2 square feet or less in area and permanently affixed to the building facade or wall on a plane parallel to the building facade or wall located entirely on private property;
5. On-premises directional and information signs not over 5 square feet in area;

ACTING CITY CLERK

6. One bulletin board not over 12 square feet in area and not over 8 feet in height for each public, charitable or religious institution when located on the wall of the institution;
7. Memorial signs or tablets and names of buildings and dates of building erection when cut into a masonry surface or constructed of bronze or other noncombustible material;
8. Signs of public service companies indicating danger and/or providing service or safety information.

3107.4.2 Permits not required for temporary signs. The erection, re-erection, construction, posting or placement of temporary signs as permitted by Section 23.55.012 of the Land Use Code shall not require a temporary sign permit. The owner of any such sign shall be responsible for compliance with the provisions of this section and other law or ordinance regulating signs. Permanent sign permits shall be required for signs which do not comply with the standards for temporary signs found in 23.55.012 of the Land Use Code when required by Section 3107.4.1.

3107.4.3 Number of signs. Temporary signs as permitted by Section 23.55.012 of the Land Use Code and signs not requiring a permit as specified in Section 3107.4.1 shall not be included as part of the maximum number of signs permitted under Chapter 23.55 of the Land Use Code.

3107.4.4 Attachments to signs. Ancillary devices, displays and attachments not originally a part of the sign for which a permit was issued shall not be added to an existing sign except as provided in this chapter, Chapter 23.55 of the Land Use Code and pursuant to another permit issued by the building official.

3107.5 Permit application. To obtain a sign permit, the applicant shall file an application which shall:

1. Clearly indicate the precise location of the proposed sign;

ACTING CITY CLERK

2. Be accompanied by adequate plans and specifications;

EXCEPTION: The building official may waive submission of plans and specifications when the structural aspect is of minor importance.

3. Be signed by the owner of the premises or an authorized agent; and

4. Be accompanied by the permit fee specified in the Fee Subtitle.

3107.6 Inspections. All signs regulated by this chapter shall be subject to inspection and periodic reinspection by the building official.

All footings shall be inspected by the building official.

All signs containing electrical wiring shall be subject to the Seattle Electrical Code. Refurbished, used electrical signs and field-assembled electrical signs shall be inspected by the building official.

3107.7 Maintenance and closure of business

3107.7.1 Maintenance. All signs, together with all of their supports, braces, guys and anchors, shall be kept in good repair and in a proper state of preservation. The display surface of all signs shall be kept neatly painted or posted at all times. The building official may order the removal of all signs not properly maintained or no longer in use by the owner, occupant or lessee, and the permit therefore may be canceled.

3107.7.2 Closure of business — abandoned signs. Upon the closure and vacation of a business or activity, the operator of the business or activity shall be responsible for the removal of all signs relating to the business or activity within 90 days from the date of such closure. If the operator of the business or activity fails to remove the signs within the designated time period and the business or activity is not reoccupied or resumed during the 90-day period, then the owner of the premises upon which the signs are located shall be responsible for the removal of the signs within 180 days from the date of closure and vacation of the premises.

ACTING CITY CLERK

3107.8 Nonconforming signs. A nonconforming sign is a sign or any portion thereof which because of its location or construction could not lawfully be reconstructed in its present location. A nonconforming sign shall have no additions thereto.

EXCEPTION: Minor additions which the building official may find necessary in the interest of safety, or the changing of the advertising message thereon in connection with a change of ownership or tenancy of the premises, provided that the addition or physical change does not expand the nonconforming nature of the sign.

3107.9 General requirements

3107.9.1 General. All signs shall conform to the requirements of this section.

3107.9.2 Clearance from high voltage power lines. Signs shall be located no closer than 3 feet horizontally or 8 feet vertically from overhead electrical conductors which are energized at 750 volts or less and not less than 10 feet in any direction from overhead conductors energized at more than 750 volts. The term "overhead conductors" as used in this section means any electrical conductor, either bare or insulated, installed above the ground except such conductors as are enclosed in iron pipe or other material covering of equal strength.

3107.9.3 Clearance from fire escapes, exits or standpipes. No sign or sign structure shall be erected in such a manner that any portion of its surface or supports will interfere in any way with the free use of any fire escape, exit or standpipe.

3107.9.4 Obstruction of openings. No sign shall obstruct any openings to such an extent that light or ventilation is reduced to a point below that required by this code.

Signs erected within 5 feet of an exterior wall in which there are openings within the area of the sign shall be constructed of noncombustible material or approved plastics.

3107.9.5 Supporting members. Signs mounted on and attached to buildings shall be so designed and mounted that secondary structural members shall be incorporated into and become a part of the sign display. Exterior bracing such as angle irons, guy wires, cables

ACTING CITY CLERK

and similar devices shall be permitted only where no other reasonable method of fastening consistent with safety is possible.

3107.9.6 Non-display surfaces. If a sign is visible from more than one direction, all areas not intended as display surfaces, including the back and sides, shall be designed so that such areas are given a finished and pleasing appearance with the display surfaces visible only from the directions that they are intended to be seen.

3107.9.7 Label. Every permanent sign shall display the name of the sign erector.

3107.10 Design

3107.10.1 General. Signs and sign structures shall be designed and constructed to resist all forces to which they are subject as specified in Chapter 16 and this section. All signs shall be designed and installed to transfer all forces directly to the structural frame of the building or structure.

The overturning moment produced from lateral forces shall in no case exceed two thirds of the dead load resisting moment. Uplifts due to overturning shall be adequately resisted by proper anchorage to the ground or to the structural frame of the building. The weight of earth superimposed over footings may be used in determining the dead load resisting moment. Such earth shall be carefully placed and thoroughly compacted.

3107.10.2 Wind and seismic loads. Signs and sign structures shall be designed and constructed to resist wind and seismic forces as specified in Chapter 16 of this code.

3107.10.3 Allowable stresses. The design of wood, concrete, steel or aluminum members shall conform to the requirements of Chapters 19, 20, 22 and 23. Loads, both vertical and horizontal, exerted on the soil shall not produce stresses exceeding those specified in Chapter 16 of this code.

The working stresses of wire rope and its fastenings shall not exceed 25 percent of the ultimate strength of the rope or fasteners.

ACTING CITY CLERK

3107.11 Construction

3107.11.1 General. The supports for all signs or sign structures shall be placed in or upon private property and shall be securely built, constructed, and erected in conformance with the requirements of this chapter. All structural welding on signs and sign structures shall conform to the requirements of Chapter 20 for aluminum and Chapter 22 for steel.

3107.11.2 Materials. Materials of construction for signs and sign structures shall be of quality and grade as specified for buildings in this code.

3107.11.2.1 Plastics. All plastics used in signs shall be approved plastics as defined in Chapter 26.

Sections of approved plastics on wall signs shall not exceed 150 square feet in area.

EXCEPTIONS:

1. Outside the Fire District the area of approved plastics may be increased by 50 percent. See Section 401.2 for the definition of the Fire District.
2. Sections of approved plastics on signs other than wall signs may be of unlimited area if approved by the building official.

Sections of approved plastics on wall signs shall be separated 3 feet laterally and 6 feet vertically by the required exterior wall construction.

EXCEPTION: Sections of approved plastics on signs other than wall signs need not be separated if approved by the building official.

3107.11.2.2 Other materials. In all signs and sign structures the materials and details of construction shall, in the absence of specified requirements, conform with the following:

1. Structural steel shall be of such quality as to conform with Chapter 22. Secondary members in contact with or directly supporting the display surface may be formed of light gauge steel provided such members are designed in accordance with the specifications of the design of light gauge steel as specified

ACTING CITY CLERK

in Chapter 22 and shall be galvanized. Secondary members, when formed integrally with the display surface, shall not be less than No. 24 gauge in thickness. When not formed integrally with the display surface, the minimum thickness of the secondary members shall be No. 12 gauge.

The minimum thickness of hot-rolled steel members furnishing structural support for signs shall be 1/4 inch except that if galvanized, such members shall not be less than 1/8 inch thick. Steel pipes shall be of such quality as to conform with Chapter 22. Steel members may be connected with one galvanized bolt provided the connection is adequate to transfer the stresses in the members.

2. Anchors and supports, when of wood and embedded in the soil, or within 6 inches of soil, shall be of all heartwood of a durable species or shall be pressure-treated with an approved preservative. Such members shall be marked or branded by an approved agency.

3107.11.2.3 Nonstructural trim. Nonstructural trim and portable display surfaces may be of wood, metal, approved plastics or any combination thereof.

3107.11.2.4 Approval of materials. The building official may require that sufficient technical data be submitted to substantiate the proposed use of any materials and may approve their use if it is determined that the evidence submitted is satisfactory for the use intended.

3107.11.3 Restrictions in the Fire District. In the Fire District all signs and sign structural members shall be constructed of noncombustible materials. See Section 401.2 for the definition of the Fire District.

EXCEPTIONS:

1. Regardless of fire resistive requirements for exterior walls, certain elements of signs fronting on streets or yards having a width of 50 feet may be constructed as follows:

Wood veneer of boards not less than 1 inch nominal thickness or exterior type plywood panels not less than 3/8 inch nominal thickness may be applied to walls provided the veneer does not exceed 15 feet above grade, and further provided such veneer shall be placed either directly against noncombustible surfaces or furred out from such surfaces not to exceed 1-5/8-inches with all concealed spaces fireblocked as provided by this code.

2. The display surface of a projecting sign may be of wood provided such sign is not more than 42 square feet in area, is constructed of materials not less than 2 inches in nominal thickness and is not over 15 feet in height, from ground level to the top of the sign.

3. Nonstructural trim as in Section 3107.11.2.3.

3107.11.4 Anchorage. Members supporting unbraced signs shall be so proportioned that the bearing loads imposed on the soil in either direction, horizontal or vertical, shall not exceed the safe values. Braced ground signs shall be anchored to resist the specified wind or seismic load acting in any direction. Anchors and supports shall be designed for safe bearing loads on the soil and for an effective resistance to pull-out amounting to a force 25 percent greater than the required resistance to overturning.

Signs attached to masonry, concrete or steel shall be safely and securely fastened thereto by means of metal anchors, bolts or approved expansion screws of sufficient size and anchorage to support safely the loads applied.

No wooden blocks or plugs or anchors with wood used in connection with screws or nails shall be considered proper anchorage except in the case of signs attached to wood framing.

No lead plugs or anchors shall be used to support signs.

No anchor or support of any sign shall be connected to or supported by an unbraced parapet wall unless the wall is designed or braced for the added forces.

ACTING CITY CLERK

3107.12 Roof signs

3107.12.1 General. Roof signs shall be constructed of noncombustible material except as specified in Section 3107.11. When constructed on a building, the sign shall be thoroughly secured and anchored to the frame of the building on which it is constructed and erected.

3107.12.2 Clearance and access. A passage clear of all obstructions shall be left under or around, and immediately adjacent to, signs exceeding a height of 4 feet above the roof. Such passage shall not be less than 3 feet wide and 4 feet high and shall be at parapet or roof level.

There shall be one such passage or access opening as follows:

1. For each roof sign upon a building.
2. An access opening for every 50 lineal feet of horizontal roof sign extension.
3. Within 20 feet of walls and parapets when roof signs are at right angles to a face of the building.

3107.13 Electric signs

3107.13.1 Construction. Electric signs shall be constructed of noncombustible materials except as provided in Section 3107.11. The enclosed shell of electric signs shall be watertight except that service holes fitted with covers shall be provided into each compartment of such signs.

3107.13.2 Installation. Electrical equipment used in connection with display signs shall be installed in accordance with the Seattle Electrical Code.

3107.13.3 Display surfaces. Display surfaces of wood may not be used in electric signs.

Section 192. Section 3201 of the International Building Code, 2003 Edition, is amended as follows:

((~~**3201.1 Scope.** The provisions of this chapter shall govern the encroachment of structures into the public right-of-way.~~

~~**3201.2 Measurement.** The projection of any structure or appendage shall be the distance measured horizontally from the lot line to the outermost point of the projection.~~

~~**3201.3 Other laws.** The provisions of this chapter shall not be construed to permit the violation of other laws or ordinances regulating the use and occupancy of public property.~~

~~**3201.4 Drainage.** Drainage water collected from a roof, awning, canopy or marquee, and condensate from mechanical equipment shall not flow over a public walking surface.~~))

Any encroachment of a building or structure on, over or under sidewalks, streets and other public property is subject to approval by the Director of Transportation and/or the building official. Such encroachments shall comply with this code or other codes as determined by the Director of Transportation or the building official.

No door in any position shall project over public property.

Structures or appendages regulated by this code shall be constructed of materials as specified in this code for structures on private property.

The projection of any structure or appendage shall be the distance measured horizontally from the property line to the outermost point of the projection.

No provisions of this chapter shall be construed to permit the violation of other laws or ordinances regulating the use and occupancy of public property.

Section 193. Section 3202 of the International Building Code, 2003 Edition, is repealed.

Section 194. Section 3303 of the International Building Code, 2003 Edition, is amended as follows:

3303.1 Construction documents. Construction documents and a schedule for demolition must be submitted when required by the building official. Where such information is required, no work shall be done until such construction documents or schedule, or both, are approved.

ACTING CITY CLERK

3303.2 Pedestrian protection. The work of demolishing any building shall not be commenced until pedestrian protection is in place as required by this chapter and Title 15, Seattle Municipal Code, Street and Sidewalk Use.

3303.3 Means of egress. A party wall balcony or horizontal exit shall not be destroyed unless and until a substitute means of egress has been provided and approved.

3303.4 Surface condition and fill. The site shall be left level and free of debris upon completion of the demolition, and all holes shall be filled or protected with secure fences. Holes may be filled with concrete, rocks or other non-decaying material no larger than 12 inches in diameter. Wood and other organic material may not be buried on the site. Leaving the site level means:

1 The grade conforms to that existing on all sides;

2 Surface water will drain off;

3 Surface is smooth; and

4 Broken sections of the foundation or other material are not exposed.

The site shall be seeded upon completion of the demolition if it is to be left vacant for more than six months.

((~~**Vacant lot.** Where a structure has been demolished or removed, the vacant lot shall be filled and maintained to the existing grade or in accordance with the ordinances of the jurisdiction having authority.~~)).

3303.5 Water accumulation. Provision shall be made to prevent the accumulation of water or damage to any foundations on the premises or the adjoining property.

3303.6 Utility connections. Service utility connections shall be discontinued and capped in accordance with ((~~the approved rules and the requirements of the authority having jurisdiction~~)) requirements of the governing utility including, but not limited to, the Seattle Public Utilities, Seattle Transportation Department, Fire Department, City Light, Puget Sound Energy, and Qwest Communications.

The demolition of any building or structure shall conform to the following provisions:

3303.7 Removal of hazardous and combustible materials. All asbestos and other hazardous material shall be removed prior to demolition, in accordance with regulations of the Environmental Protection Agency the Puget Sound Clean Air Agency and other pertinent agencies. Combustible waste shall be removed in accordance with the Seattle Fire Code. During demolition, streets and sidewalks shall be left clean at the end of each day's operation.

3303.8 Welding and cutting. Welding and cutting shall be performed in accordance with the Seattle Fire Code.

3303.9 Erosion and sediment control. Provision shall be made to stabilize ground conditions to eliminate dust and erosion. Demolition sites shall comply with the Stormwater, Grading and Drainage Control Code.

3303.10 Drainage. If the demolition will result in a change of drainage patterns, provision shall be made to assure that the flow of all water courses, including streams, ditches, drains, combined sewers, and runoff, intercepted during the progress of the work, are returned to the condition present before the demolition or as specified on the permit, and in accordance with the Stormwater, Grading and Drainage Control Code.

3303.11 Foundations and footings. All concrete or masonry floors, foundations, footings, basement walls and retaining walls not to be reused shall be removed to 18 inches below final grade. All concrete floors left in place shall be broken so as to allow water to drain through unless the floors are to be used.

3303.12 Engineer's report. The building official may require a structural engineer's analysis of proposed demolitions or any portions of a structure remaining after demolition.

3303.13 Underground tanks. When demolition occurs, all underground tanks on the site shall either be removed or filled, as required by the Seattle Fire Code.

Section 195. Section 3304.1 of the International Building Code, 2003 Edition, is amended as follows:

3304.1 Excavation and fill. Excavation and fill for buildings and structures shall be constructed or protected so as not to endanger life or property . Stumps and roots shall be removed from the soil to a depth of at least 12 inches (305 mm) below the surface of the ground in the area to be occupied by the building. Wood forms which have been used in placing concrete, if within the ground or between foundation sills and the ground, shall be removed before a building is occupied or used for any purpose. Before completion, loose or casual wood shall be removed from direct contact with the ground under the building.

3304.1.1 Slope limits. Slopes for permanent fill shall not be steeper than one unit vertical in two units horizontal (50-percent slope). Cut slopes for permanent excavations shall not be steeper than one unit vertical in two units horizontal (50-percent slope). Deviation from the foregoing limitations ((~~for cut slopes~~)) shall be permitted only upon the presentation of a soil investigation report acceptable to the building official.

3304.1.2 Surcharge. No fill or other surcharge loads shall be placed adjacent to any building or structure unless such building or structure is capable of withstanding the additional loads caused by the fill or surcharge. Existing footings or foundations which can be affected by any excavation shall be underpinned adequately or otherwise protected against settlement and shall be protected against later movement.

3304.1.3 Footings on <u>or</u> adjacent <u>to</u> slopes. For footings on <u>or</u> adjacent <u>to</u> slopes, see Chapter 18.

3304.1.4 Fill supporting foundations. Fill to be used to support the foundations of any building or structure shall comply with Section 1803.5. Special inspections of compacted fill shall be in accordance with Section 1704.7.

ACTING CITY CLERK

Section 196. Section 3305 of the International Building Code, 2003 Edition, is amended as follows:

3305.1 Facilities required. Sanitary facilities shall be provided during construction, remodeling or demolition activities in accordance with the ((~~*International*~~)) *Uniform Plumbing Code*.

Section 197. Section 3306 and Table 3306.1 of the International Building Code, 2003 Edition, are amended as follows:

3306.1 Protection required. The protection of the public and of the sidewalks, streets and other public property during construction or demolition shall be provided as required by Title 15, Seattle Municipal Code, Street and Sidewalk Use.

((~~Pedestrians shall be protected during construction, remodeling and demolition activities as required by this chapter and Table 3306.1. Signs shall be provided to direct pedestrian traffic.~~

~~**3306.2 Walkways.** A walkway shall be provided for pedestrian travel in front of every construction and demolition site unless the authority having jurisdiction authorizes the sidewalk to be fenced or closed. Walkways shall be of sufficient width to accommodate the pedestrian traffic, but in no case shall they be less than 4 feet (1219 mm) in width. Walkways shall be provided with a durable walking surface. Walkways shall be accessible in accordance with Chapter 11 and shall be designed to support all imposed loads and in no case shall the design live load be less than 150 pounds per square foot (psf) (7.2 kN/m^2).~~

~~**3306.3 Directional barricades.** Pedestrian traffic shall be protected by a directional barricade where the walkway extends into the street. The directional barricade shall be of sufficient size and construction to direct vehicular traffic away from the pedestrian path.~~

~~**3306.4 Construction railings.** Construction railings shall be at least 42 inches (1067 mm) in height and shall be sufficient to direct pedestrians around construction areas.~~

ACTING CITY CLERK

~~**3306.5 Barriers.** Barriers shall be a minimum of 8 feet (2438 mm) in height and shall be placed on the side of the walkway nearest the construction. Barriers shall extend the entire length of the construction site. Openings in such barriers shall be protected by doors which are normally kept closed.~~

~~**3306.6 Barrier design.** Barriers shall be designed to resist loads required in Chapter 16 unless constructed as follows:~~

1. ~~Barriers shall be provided with 2-inch by 4-inch (51 mm by 102 mm) top and bottom plates.~~
2. ~~The barrier material shall be a minimum of $^{3}/_{4}$-inch (19.1 mm) boards or $^{1}/_{4}$-inch (6.4 mm) wood structural use panels.~~
3. ~~Wood structural use panels shall be bonded with an adhesive identical to that for exterior wood structural use panels.~~
4. ~~Wood structural use panels $^{1}/_{4}$ inch (6.4 mm) or $^{5}/_{16}$ inch (23.8 mm) in thickness shall have studs spaced not more than 2 feet (610 mm) on center (o.c.).~~
5. ~~Wood structural use panels $^{3}/_{8}$ inch (9.5 mm) or $^{1}/_{2}$ inch (12.7 mm) in thickness shall have studs spaced not more than 4 feet (1219 mm) o.c., provided a 2-inch by 4-inch (51 mm by 102 mm) stiffener is placed horizontally at midheight where the stud spacing exceeds 2 feet (610 mm) o.c.~~
6. ~~Wood structural use panels $^{5}/_{8}$ inch (15.9 mm) or thicker shall not span over 8 feet (2438 mm).~~

~~**3306.7 Covered walkways.** Covered walkways shall have a minimum clear height of 8 feet (2438 mm) as measured from the floor surface to the canopy overhead. Adequate lighting shall be provided at all times. Covered walkways shall be designed to support all imposed loads. In no case shall the design live load be less than 150 psf (7.2 kN/m^2) for the entire structure.~~

~~**Exception:** Roofs and supporting structures of covered walkways for new, light-frame construction not exceeding two stories in height are permitted to be designed for a live load~~

~~of 75 psf (3.6kN/m^2) or the loads imposed on them, whichever is greater. In lieu of such designs, the roof and supporting structure of a covered walkway are permitted to be constructed as follows:~~

~~1. Footings shall be continuous 2-inch by 6-inch (51 mm by 152 mm) members.~~

~~2. Posts not less than 4 inches by 6 inches (102 mm by 152 mm) shall be provided on both sides of the roof and spaced not more than 12 feet (3658 mm) o.c.~~

~~3. Stringers not less than 4 inches by 12 inches (102 mm by 305 mm) shall be placed on edge upon the posts.~~

~~4. Joists resting on the stringers shall be at least 2 inches by 8 inches (51 mm by 203 mm) and shall be spaced not more than 2 feet (610 mm) o.c.~~

~~5. The deck shall be planks at least 2 inches (51 mm) thick or wood structural panels with an exterior exposure durability classification at least $^{23}/_{32}$ inch (18.3 mm) thick nailed to the joists.~~

~~6. Each post shall be knee braced to joists and stringers by 2-inch by 4-inch (51 mm by 102 mm) minimum members 4 feet (1219 mm) long.~~

~~7. A 2-inch by 4-inch (51 mm by 102 mm) minimum curb shall be set on edge along the outside edge of the deck.~~

~~**3306.8 Repair, maintenance and removal.** Pedestrian protection required by this chapter shall be maintained in place and kept in good order for the entire length of time pedestrians may be endangered. The owner or the owner's agent, upon the completion of the construction activity, shall immediately remove walkways, debris and other obstructions and leave such public property in as good a condition as it was before such work was commenced.~~

~~**3306.9 Adjacent to excavations.** Every excavation on a site located 5 feet (1524 mm) or less from the street lot line shall be enclosed with a barrier not less than 6 feet (1829 mm) high. Where located more than 5 feet (1524 mm) from the street lot line, a barrier shall be erected~~

ACTING CITY CLERK

~~when required by the building official. Barriers shall be of adequate strength to resist wind pressure as specified in Chapter 16.~~

~~**TABLE 3306.1**~~
~~**PROTECTION OF PEDESTRIANS**~~

~~**HEIGHT OF CONSTRUCTION**~~	~~**DISTANCE FROM CONSTRUCTION TO LOT LINE**~~	~~**TYPE OF PROTECTION REQUIRED**~~
~~8 feet or less~~	~~Less than 5 feet~~	~~Construction railings~~
	~~5 feet or more~~	~~None~~
~~More than 8 feet~~	~~Less than 5 feet~~	~~Barrier and covered walkway~~
	~~5 feet or more, but not more than one-fourth the height of construction~~	~~Barrier and covered walkway~~
	~~5 feet or more, but between one-fourth and one-half the height of construction~~	~~Barrier~~
	~~5 feet or more, but exceeding one-half the height of construction~~	~~None~~

~~For SI: 1 foot = 304.8 mm~~))

Section 198. Section 3307 of the International Building Code, 2003 Edition, is amended as follows:

3307.1 Protection required. Adjoining public and private property shall be protected from damage during construction, remodeling and demolition work. Protection must be provided for footings, foundations, party walls, chimneys, skylights and roofs. Provisions shall be made to control water runoff and erosion during construction or demolition activities. ((~~The person making or causing an excavation to be made shall provide written notice to the owners of adjoining buildings advising them that the excavation is to be made and that the adjoining buildings should be protected. Said notification shall be delivered not less than 10 days prior to the scheduled starting date of the excavation.~~))

When the owner of a lot raises or lowers the level of the lot by a fill or excavation, he/she shall at his/her own expense protect all adjoining property from encroachment by such fill or excavation, or from danger of collapse due to excavation by the erection of a retaining wall or

ACTING CITY CLERK

by sloping the sides of the fill or excavation entirely within the confines of the lot at an approved slope, or by other approved methods.

Section 199. Section 3308 of the International Building Code, 2003 Edition, is amended as follows:

3308.1 Temporary use of streets, alleys and public property shall comply with Title 15, Seattle Municipal Code, Street and Sidewalk Use.

((~~**Storage and handling of materials.** The temporary use of streets or public property for the storage or handling of materials or of equipment required for construction or demolition, and the protection provided to the public shall comply with the provisions of the authority having jurisdiction and this chapter.~~

~~**3308.1.1 Obstructions.** Construction materials and equipment shall not be placed or stored so as to obstruct access to fire hydrants, standpipes, fire or police alarm boxes, catch basins or manholes, nor shall such material or equipment be located within 20 feet (6096 mm) of a street intersection, or placed so as to obstruct normal observations of traffic signals or to hinder the use of public transit loading platforms.~~

~~**3308.2 Utility fixtures.** Building materials, fences, sheds or any obstruction of any kind shall not be placed so as to obstruct free approach to any fire hydrant, fire department connection, utility pole, manhole, fire alarm box or catch basin, or so as to interfere with the passage of water in the gutter. Protection against damage shall be provided to such utility fixtures during the progress of the work, but sight of them shall not be obstructed.~~))

Section 200 Subsection 3311.1 of the International Building Code, 2003 Edition, is amended as follows:

3311.1 Where required. Buildings ((~~four~~)) six stories above grade plane or more in height shall be provided with not less than one standpipe for use during construction. Such standpipes

shall be installed where the progress of construction is not more than 40 feet (12 192 mm) in height above the lowest level of fire department access. Such standpipe shall be provided with fire department hose connections at accessible locations adjacent to usable stairs. Such standpipes shall be extended as construction progresses to within one floor of the highest point of construction having secured decking or flooring.

Exception: In buildings of Type III, IV and V construction, installation of the standpipe may be deferred until 30 days after installation of roof sheathing is completed or the progress of construction reaches 50 feet (15 240 mm), whichever occurs sooner.

Section 201. Subsection 3312.1 of the International Building Code, 2003 Edition, is amended as follows:

3312.1 Completion before occupancy. In buildings where an automatic sprinkler system is required by this code, it shall be unlawful to occupy any portion of a building or structure until the automatic sprinkler system installation has been tested and approved, except as provided in Section ((~~110.3~~)) 109.4.

Section 202. Chapter 34 of the Seattle Building Code, 2003 Edition, shall read as follows:

Chapter 34

EXISTING STRUCTURES

SECTION 3401

GENERAL

Buildings in existence at the time of the passage of this building code which were legally constructed and occupied in accordance with the provisions of a prior code may have their existing occupancy continued, provided such occupancy is not hazardous.

Any change in the occupancy or character of occupancy of any existing building, structure or portion thereof shall comply with the provisions of Section 109 and Section 3405.

In order to legalize an existing occupancy for the record, it is required that the building comply with the fire and life safety requirements of this building code or the effective code at the time the building was constructed. If the existing occupancy or character of occupancy is other than that for which the building was constructed, the building shall comply with this building code or the effective code at the time the existing occupancy was legally established.

SECTION 3402

MAINTENANCE

3402.1 General. All buildings or structures, both existing and new, and all parts thereof shall be maintained in a safe and sanitary condition. All devices or safeguards which are or were required by a code in effect when the building or structure was erected, altered, or repaired shall be maintained in good working order. The owner or a designated agent shall be responsible for such maintenance of buildings and structures. It shall be unlawful to fail to so maintain these parts of the building or equipment or to fail to immediately comply with any lawful notice or order of the fire chief or the building official.

EXCEPTIONS: 1. The building official may modify the requirements of this subsection where all or a portion of a building is unoccupied, closed off and reasonably secure from unlawful entry.

2. Occupants of Group R-2 apartments, and Group R-3 dwellings shall be responsible for the maintenance of smoke alarms required by Chapter 9 and the *International Fire Code*.

3402.2 Unsafe Building Appendages. Parapet walls, cornices, spires, towers, tanks, statuary and other appendages or structural members which are supported by, attached to, or a part of a building and which are in a deteriorated condition or are otherwise unable to sustain the design loads which are specified in this building code, are hereby designated as unsafe building

ACTING CITY CLERK

appendages. All such unsafe building appendages are public nuisances and shall be abated in accordance with Section 102 of this building code.

3402.3 Central Waterfront Piers. All piers located between West Harrison Street and South Massachusetts Street, both existing and new, and all portions thereof shall be maintained in a safe condition capable of supporting the design loads as specified in this code. See also Section 421.

SECTION 3403

ADDITIONS, ALTERATIONS OR REPAIRS

3403.1 General. Buildings and structures to which additions, alterations or repairs are made shall comply with all the requirements of this code for new facilities except as specifically provided in this section. See the *International Fire Code* for provisions requiring installation of smoke alarms in existing Group R-3 occupancies. See also applicable provisions of the Seattle Energy Code. See Section 3406 for accessibility provisions for additions, alterations and repairs.

3403.2 When Allowed. Additions, alterations or repairs may be made to any building or structure without requiring the existing building or structure to comply with all the requirements of this code, provided the addition, alteration or repair conforms to that required for a new building or structure.

EXCEPTIONS:

1. Alterations to existing structural elements or additions of new structural elements that are not required by Sections 1613 through 1623 and are initiated for the purpose of increasing the strength or stiffness of the seismic-force-resisting system of an existing structure need not be designed for forces conforming to Sections 1613 through 1623 provided that an engineering analysis is submitted indicating the following:

1.1. The design strength of existing structural elements required to resist seismic forces is not reduced.

1.2. The seismic force to required existing structural elements is not increased beyond their design strength.

1.3. New structural elements are detailed and connected to the existing structural elements as required by Chapter 16.

1.4. New or relocated nonstructural elements are detailed and connected to existing or new structural elements as required by Chapter 16.

1.5. The alterations do not create a structural irregularity as defined in Section 1616.5 or make an existing structural irregularity more severe.

1.6. The alterations do not result in the creation of an unsafe condition.

2. Where changes to offices, outpatient clinics or medical offices occur on a multi-tenant floor which contains non-conforming corridors, new tenant walls associated with the tenant change need not meet the standards for one-hour corridor construction, unless the project is considered a substantial alteration as defined in this chapter.

3. Automatic sprinkler systems are required when new dwelling units are added to buildings according to Items 3.1 through 3.3 below.

3.1 One unit is permitted to be added without an automatic sprinkler system unless sprinklers are otherwise required by this section. If more than one unit is added, the new units shall be equipped with a sprinkler system.

3.2 In buildings that do not comply with the provisions of this code for number of stories, allowable area, height or type of construction before the unit is added, an automatic sprinkler system shall be provided in the new unit. The addition of the new unit shall not be allowed if it increase the nonconformity.

ACTING CITY CLERK

3.3 In buildings undergoing substantial alteration, an automatic sprinkler system is required where required by this code for new construction.

3403.3 Additions. Any building plus new additions shall not exceed the height, number of stories and area specified for new buildings.

EXCEPTION: An addition to an existing nonconforming building may exceed the limitations of the preceding paragraph if a fire wall is provided, the existing building is not made more nonconforming, and the addition conforms to this code.

3403.4 Impracticality. In cases where total compliance with all the requirements of this code is impractical, the applicant may arrange a pre-design conference with the design team and the building official. The applicant shall identify design solutions and modifications that conform to Section 104.14. The building official may waive specific requirements in this code which he/she has determined to be impractical.

3403.5 Compliance with Retroactive Ordinances. Alterations and repairs to existing buildings which are being made in response to a notice or order requiring compliance with the Housing and Building Maintenance Code, Subtitle II, Title 22 of the Seattle Municipal Code, Fire Code or other ordinances applicable to existing buildings, shall be permitted to be made in accordance with the standards contained in those ordinances, rather than the standards for new buildings contained in this building code. Where standards are not specified in those ordinances, such alterations or repairs must conform to the requirements of this chapter of the building code.

3403.6 Damaged Buildings. When repairs are made to a building that was damaged by fire or other means, and the repairs exceed 60 percent of the building's value, the entire building shall conform to the requirements of this code. The value of the building shall be determined by the building official, or by the assessed value per King County records or by an appraisal made by a recognized appraisal agency approved by the building official.

3403.7 Non-structural Alterations or Repairs. Alterations or repairs which are non-structural and do not affect any member or part of the building or structure having required fire-resistance may be made with the same materials of which the building or structure is constructed, provided that no change shall be permitted which increases its hazard.

3403.8 Maintenance of Structural Stability. When approved by the building official, minor structural alterations or repairs necessary to maintain the structural stability of the building may be made with the same material of which the building or structure is constructed.

3403.9 Historic Buildings and Structures. The building official may modify the specific requirements of this building code as it applies to buildings and structures designated as landmarks of historical or cultural importance and require in lieu thereof alternate requirements which, in the opinion of the building official, will result in a reasonable degree of safety to the public and the occupants of those buildings.

A historic building or structure is one which has been designated for preservation by the City Landmarks Preservations Board or the State of Washington, has been listed, or has been determined eligible to be listed, in the National Register of Historic Places, has been officially nominated for such status, or is a structure contributing to the character of a landmark or special review district.

3403.10 Radon-resistive Construction Requirements. The radon-resistive construction requirements found in the Washington State Ventilation and Indoor Air Quality Code, WAC 51-13 shall apply to all Group R buildings to which either an addition or substantial alteration is made where the basement, foundation or crawl space is altered or expanded.

3403.11. Unreinforced Masonry Chimneys. Whenever an unreinforced masonry chimney is altered or when the building in which such a chimney is located undergoes substantial alteration, the chimney shall conform to rules promulgated by the Director.

3403.12 Substantial Alterations or Repairs.

ACTING CITY CLERK

3403.12.1 General. Any building or structure to which substantial alterations or repairs are made shall conform with the requirements of this Section and Sections 403 (high rise buildings, when applicable), special requirements for the Fire District found in Chapter 4, when applicable, Section 716 (protection of ducts and air-transfer openings), Chapter 8 (interior finishes), 903 (automatic sprinkler systems), and Chapter 10 (means of egress). Fire alarms shall be provided as required by the *International Fire Code*.

See Section 3403.11 for specific requirements for unreinforced masonry chimneys.

3403.12.2 Definition. For the purpose of this section, substantial alterations or repairs may mean any one of the following and as determined by the building official:

1. Extensive structural repair.
2. Remodeling or additions which substantially extend the useful physical and/or economic life of the building or significant portion of the building, other than typical tenant remodeling.
3. A change of a significant portion of a building to an occupancy that is more hazardous than the existing occupancy, based on the combined life and fire risk as determined by the building official. Table 3403.12 may be used by the building official as a guideline. A change of tenant does not necessarily constitute a change of occupancy.
4. Reoccupancy of a building that has been substantially vacant for more than 24 months in occupancies other than Group R-3.
5. A significant increase in the occupant load of an unreinforced masonry building.

3403.12.3 Seismic Regulations. The provisions of Sections 1613 through 1623 shall apply to all buildings or structures to which substantial alterations or repairs are made. In addition, the building official may require testing of existing materials when there is insufficient evidence of structural strength or integrity.

ACTING CITY CLERK

Exceptions: 1. If an alteration is substantial only because it is a change to a more hazardous occupancy, compliance with this subsection is only required if the life hazard risk increases, as determined by the building official.

2. The building official may accept a proposal in lieu of compliance with Chapter 16. The proposal shall be based on a comprehensive report prepared by a licensed structural engineer according to rules promulgated by the Director. The report shall include an investigation and structural analysis of the building based on an approved standard. The report shall specify the building's seismic deficiencies, and propose measures that will provide an acceptable degree of seismic safety considering the nature, size and scope of the project. This requirement shall also apply to Section 102 as conditions may require.

3. In lieu of compliance with the seismic provisions of Chapter 16 for Group R-3 Occupancies, when approved by the building official, the applicant may evaluate and strengthen portions of the building lateral support structure, such as foundations and cripple walls.

3403.12.4 Other Structural Work. All other structural work shall comply with the requirements of Chapters 15 through 23 and Sections 1405 and 2605.

Table 3403.12
RATING OF OCCUPANCIES BY DEGREE OF HAZARD

Occupancy	Description	Life	Fire	Combined Rating
A1	Assembly uses, usually with fixed seating, intended for the production and viewing of the performing arts or motion pictures	4	3	12
A2	Assembly uses intended for food and/or drink consumption	4	3	12
A3	Assembly uses intended for worship, recreation or amusement and other assembly uses not classified elsewhere in Group A	4	3	12

Occupancy	Description	Life	Fire	Combined Rating
A4	Assembly uses intended for viewing of indoor sporting events and activities with spectator seating	3	1	3
A5	Assembly uses intended for participation in or viewing outdoor activities	3	1	3
B	Office, professional or service-type transactions, including storage of records and accounts.	2	1	2
B	Eating & drinking establishments with an occupant load of less than 50	2	1	2
B	Buildings or portions of buildings having rooms used for educational purposes beyond 12th grade	2	1	2
E	Any building used for educational purposes by six or more persons at any one time for educational purposes through the 12th grade	3	2	6
E	Day care centers for more than five children older than $2^1/_2$ years of age	3	2	6
I4	Facilities that provide accommodations for less than 24 hours for more than five unrelated adults and provides supervision and personal care services; facilities that provide supervision and personal care on less than a 24-hour basis for more than five children $2^1/_2$ years of age or less	4	3	12
F1	Moderate hazard factory and industrial	2	2	4
F2	Low-hazard factory and industrial	1	1	1
H1	Occupancies with a detonation hazard	5	4	20
H2	Occupancies which present a deflagration hazard or a hazard from accelerated burning	5	4	20
H3	Occupancies containing materials that readily support combustion or that pose a physical hazard	5	4	20
H4	Occupancies containing materials that are health hazards	5	4	20
H5	Semiconductor fabrication facilities	5	4	20
I1	Buildings, structures or parts thereof housing more than 16 persons, on a 24-hour basis, who because of age, mental disability or other reasons, live in a supervised residential environment that provides personal care services	3	3	9

ACTING CITY CLERK

Occupancy	Description	Life	Fire	Combined Rating
I2	Buildings and structures used for medical, surgical, psychiatric, nursing or custodial care on a 24-hour basis of more than five persons who are not capable of self-preservation; child care facilities that provide care on a 24-hour basis to more than five children $2^1/_2$ years of age or less	4	3	12
I3	Jails, prisons, reformatories	4	3	12
LC	Buildings used, for the business of providing licensed care to clients in one of the following categories regulated by either the Washington Department of Health or the Department of Social and Health Services	3	3	9
M	Buildings used for display and sale of merchandise	3	2	6
R1	Residential occupancies where the occupants are primarily transient in nature	3	3	9
R2	Residential occupancies containing sleeping units or more than two dwelling units where the occupants are primarily permanent in nature	3	3	9
R3	One- and two-family dwellings; family child day care homes; adult family homes	2	1	2
R4	Buildings arranged for occupancy as residential care/assisted living facilities including more than five but not more than 16 occupants	3	3	9
S1	Moderate hazard	2	2	4
S2	Low-hazard storage	1	1	1
U	Accessory character and miscellaneous structures	1	1	1

SECTION 3404

MOVED BUILDINGS

3404.1 Nonresidential Buildings or Structures. Nonresidential buildings or structures moved into or within the city shall comply with standards adopted by the building official. The building official may require an inspection of the building before or after moving. The permit holder shall correct all deficiencies identified by the inspection. A bond or cash deposit in an amount sufficient to abate or demolish the building may be required to be posted prior to

ACTING CITY CLERK

issuance of a permit. See Section 106 for information required on plans. Any moved building that is not in complete compliance with standards for moved buildings within eighteen months from the date of permit issuance and is found to be a public nuisance may be abated.

3404.2 Residential Buildings or Structures. Residential buildings or structures moved into or within the city are not required to comply with all of the requirements of this code if the original occupancy classification of the building or structure is not changed. Compliance with all of the requirements of this chapter will be required if the moved residential buildings or structures undergo substantial alteration. Work performed on new and existing foundations shall comply with all of the requirements of this code for new construction.

SECTION 3405

CHANGE OF OCCUPANCY

No change shall be made in the character of occupancies or use of any building which would place the building in a different division or subdivision of the same group of occupancy or in a different group of occupancies, unless such building is made to comply with the requirements of this chapter and the requirements of Chapter 4 for such division or group of occupancy. Change of tenants will be permitted so long as the character of the occupancy is not changed.

EXCEPTION: The character of the occupancy of existing buildings may be changed subject to the approval of the building official, as set forth in Section 3403. The building may be occupied for purposes in other groups without conforming to all the requirements of this code for those groups, provided the new or proposed use is not more hazardous, based on life and fire risk, than the existing use.

No change in the character of occupancy of a building shall be made without a certificate of occupancy, as required in Section 109 of this code. The building official may issue a certificate of occupancy pursuant to the intent of the above exception without certifying that the building complies with all provisions of this code.

In addition to the requirements of Sections 420, 1203 and 2903, upon conversion of an existing building to residential occupancy, the elements of the dwelling unit envelope which are altered shall comply with the sound transmission control requirements of Section 1207.

See Section 3403.12 for additional requirements for substantial alterations.

SECTION 3406

ACCESSIBILITY FOR EXISTING BUILDINGS

3406.1 Scope. The provisions of Sections 3406.1 through 3406.8 apply to maintenance, change of occupancy, additions and alterations to existing buildings, including those identified as historic buildings.

Exception: Type B dwelling or sleeping units required by Section 1107 are not required to be provided in existing buildings and facilities.

3406.1.1 Definition. The following term shall, for the purposes of this chapter and as used elsewhere in the code, have the following meaning:

TECHNICALLY INFEASIBLE. An alteration of a building or a facility that has little likelihood of being accomplished because the existing structural conditions require the removal or alteration of a load-bearing member that is an essential part of the structural frame, or because other existing physical or site constraints prohibit modification or addition of elements, spaces or features which are in full and strict compliance with the minimum requirements for new construction and which are necessary to provide accessibility.

3406.2 Maintenance of facilities. A building, facility or element that is constructed or altered to be accessible shall be maintained accessible during occupancy.

3406.3 Change of occupancy. Existing buildings, or portions thereof, that undergo a change of group or occupancy shall have all of the following accessible features:

1. At least one accessible building entrance.
2. At least one accessible route from an accessible building entrance to primary function areas.

ACTING CITY CLERK

3. Signage complying with Section 1110.
4. Accessible parking, where parking is being provided.
5. At least one accessible passenger loading zone, when loading zones are provided.
6. At least one accessible route connecting accessible parking and accessible passenger loading zones to an accessible entrance.

Where it is technically infeasible to comply with the new construction standards for any of these requirements for a change of group or occupancy, the above items shall conform to the requirements to the maximum extent technically feasible. Change of group or occupancy that incorporates any alterations or additions shall comply with this section and Sections 3406.4, 3406.5, 3406.6 and 3406.7.

3406.4 Additions. Provisions for new construction shall apply to additions. An addition that affects the accessibility to, or contains an area of primary function, shall comply with the requirements in Section 3406.6 for accessible routes.

3406.5 Alterations. A building, facility or element that is altered shall comply with the applicable provisions in Chapter 11 and ICC A117.1, unless technically infeasible. Where compliance with this section is technically infeasible, the alteration shall provide access to the maximum extent technically feasible. Where alterations would increase the number of public pay telephones to four, with at least one in the interior, or where the facility has four or more public pay telephones and one or more is altered; at least one interior text telephone shall be provided.

Exceptions:

1. The altered element or space is not required to be on an accessible route, unless required by Section 3406.6.
2. Accessible means of egress required by Chapter 10 are not required to be provided in existing buildings and facilities.

ACTING CITY CLERK

3. In alterations, accessibility to raised or sunken dining areas, or to all parts of outdoor seating areas is not required provided that the same services and amenities are provided in an accessible space usable by the general public and not restricted to use by people with disabilities.

3406.5.1 Extent of application. An alteration of an existing element, space or area of a building or facility shall not impose a requirement for greater accessibility than that which would be required for new construction.

Alterations shall not reduce or have the effect of reducing accessibility of a building, portion of a building or facility.

3406.6 Alterations affecting an area containing a primary function. Where an alteration affects the accessibility to, or contains an area of primary function, the route to the primary function area shall be accessible. The accessible route to the primary function area shall include toilet facilities, telephones or drinking fountains serving the area of primary function.

Exceptions:

1. The costs of providing the accessible route are not required to exceed 20 percent of the costs of the alterations affecting the area of primary function.
2. This provision does not apply to alterations limited solely to windows, hardware, operating controls, electrical outlets and signs.
3. This provision does not apply to alterations limited solely to mechanical systems, electrical systems, installation or alteration of fire protection systems and abatement of hazardous materials.
4. This provision does not apply to alterations undertaken for the primary purpose of increasing the accessibility of an existing building, facility or element.

3406.7 Scoping for alterations. The provisions of Sections 3406.7.1 through 3406.7.11 shall apply to alterations to existing buildings and facilities. Where an escalator or new stairway is

planned or installed requiring major structural changes, then a means of vertical transportation (e.g., elevator, platform lift) shall be provided in accordance with this chapter.

3406.7.1 Entrances. Accessible entrances shall be provided in accordance with Section 1105.

Exception: Where an alteration includes alterations to an entrance, and the building or facility has an accessible entrance, the altered entrance is not required to be accessible, unless required by Section 3406.6. Signs complying with Section 1110 shall be provided.

3406.7.2 Elevators. Altered elements of existing elevators shall comply with ASME A17.1 and ICC A117.1. Such elements shall also be altered in elevators programmed to respond to the same hall call control as the altered elevator. Elevators shall comply with chapter 296-96 WAC.

3406.7.3 Platform lifts. Platform (wheelchair) lifts complying with ICC A117.1 and installed in accordance with ASME A18.1 shall be permitted as a component of an accessible route. Platform lifts shall comply with chapter 296-96 WAC.

3406.7.4 Stairs and escalators in existing buildings. In alterations where an escalator or stair is added where none existed previously, an accessible route shall be provided in accordance with Sections 1104.4 and 1104.5.

3406.7.5 Ramps. Where steeper slopes than allowed by Section 1010.2 are necessitated by space limitations, the slope of ramps in or providing access to existing buildings or facilities shall comply with Table 3406.7.5.

TABLE 3406.7.5
RAMPS

SLOPE	MAXIMUM RISE
Steeper than 1:10 but not steeper than 1:8	3 inches
Steeper than 1:12 but not steeper than 1:10	6 inches

For SI: 1 inch = 25.4 mm.

ACTING CITY CLERK

3406.7.6 Performance areas. Where it is technically infeasible to alter performance areas to be on an accessible route, at least one of each type of performance area shall be made accessible.

3406.7.7 Dwelling or sleeping units. Where I-1, I-2 , I-3, R-1, R-2 or R-4 dwelling or sleeping units are being altered or added, the requirements of Section 1107 for Accessible or Type A units and Chapter 9 for accessible alarms apply only to the quantity of spaces being altered or added. At least one sleeping room for each 25 sleeping rooms, or fraction thereof, being added or altered, shall have telephones and visible notification devices complying with Section E104.3.4, as well as visible alarms.

3406.7.8 Jury boxes and witness stands. In alterations, accessible wheelchair spaces are not required to be located within the defined area of raised jury boxes or witness stands and shall be permitted to be located outside these spaces where the ramp or lift access restricts or projects into the means of egress.

3406.7.9 Toilet rooms. Where it is technically infeasible to alter existing toilet and bathing facilities to be accessible, an accessible unisex toilet or bathing facility is permitted. The unisex facility shall be located on the same floor and in the same area as the existing facilities. The number of toilet facilities and water closets required by the State Building Code may be reduced by one, in order to provide accessible features.

3406.7.10 Dressing, fitting and locker rooms. Where it is technically infeasible to provide accessible dressing, fitting or locker rooms at the same location as similar types of rooms, one accessible room on the same level shall be provided. Where separate-sex facilities are provided, accessible rooms for each sex shall be provided. Separate-sex facilities are not required where only unisex rooms are provided.

3406.7.11 Check-out aisles. Where check-out aisles are altered, at least one of each check-out aisle serving each function shall be made accessible until the number of accessible check-out aisles complies with Section 1109.12.2.

CITY CLERK

3406.7.12 Thresholds. The maximum height of thresholds at doorways shall be $^3/_4$ inch (19.1 mm). Such thresholds shall have beveled edges on each side.

3406.8 Historic buildings. These provisions shall apply to buildings and facilities designated as historic structures that undergo alterations or a change of occupancy, unless technically infeasible. Where compliance with the requirements for accessible routes, ramps, entrances or toilet facilities would threaten or destroy the historic significance of the building or facility, as determined by the authority having jurisdiction, the alternative requirements of Sections 3406.8.1 through 3406.8.5 for that element shall be permitted.

3406.8.1 Site arrival points. At least one accessible route from a site arrival point to an accessible entrance shall be provided.

3406.8.2 Multilevel buildings and facilities. An accessible route from an accessible entrance to public spaces on the level of the accessible entrance shall be provided.

3406.8.3 Entrances. At least one main entrance shall be accessible.

Exceptions:

1. If a main entrance cannot be made accessible, an accessible nonpublic entrance that is unlocked while the building is occupied shall be provided; or
2. If a main entrance cannot be made accessible, a locked accessible entrance with a notification system or remote monitoring shall be provided.

Signs complying with Section 1110 shall be provided at the primary entrance and the accessible entrance.

3406.8.4 Toilet and bathing facilities. Where toilet rooms are provided, at least one accessible toilet room complying with Section 1109.2.1 shall be provided.

3406.8.5 Ramps. The slope of a ramp run of 24 inches (610 mm) maximum shall not be steeper than one unit vertical in eight units horizontal (12-percent slope).

ACTING CITY CLERK

Section 203. Chapter 35 of the International Building Code, 2003 Edition, is amended by adding a referenced standard as follows:

ASTM E336–97 Standard Test Method for Measurement of Airborne Sound Insulation in Buildings

ACTING CITY CLERK

Section 204. The Director of the Department of Planning and Development shall for a period of 60 days following the effective date of this ordinance, approve applications that comply with either the requirements of this Ordinance or with the requirements of Ordinance 119079 as amended by Ordinances 120379.

Section 205. The provisions of this ordinance are declared to be separate and severable. The invalidity of any clause, sentence, paragraph, subdivision, section or portion of this ordinance, or the invalidity of the application thereof to any person, owner, or circumstance shall not affect the validity of the remainder of this ordinance, or the validity of its application to other persons, owners, or circumstances.

Section 206. This ordinance shall take effect and be in force thirty (30) days from and after its approval by the Mayor, but if not approved and returned by the Mayor within ten (10) days after presentation, it shall take effect as provided by Municipal Code Section 1.04.020.

ACTING CITY CLERK

Passed by the City Council the 6th day of July, 2004, and signed by me in open session in authentication of its passage this 6th day of July, 2004.

President pro tem of the City Council

Approved by me this 16 day of July, 2004.

Gregory J. Nickels, Mayor

Filed by me this 16 day of July, 2004.

City Clerk

(Seal)

City of Seattle

Gregory J. Nickels, Mayor

Office of the Mayor

June 1, 2004

Honorable Jan Drago
President
Seattle City Council
City Hall, 2nd Floor

Dear Council President Drago:

I am pleased to transmit the attached proposed Council Bill that adopts the 2003 International Building Code with Seattle amendments. This bill is part of a group of four bills prepared by the Department of Planning and Development (DPD) that adopt new model codes, and another bill that updates the Seattle Energy Code. These codes are the most current state and national standards for building construction. The Fire Department is transmitting another related bill adopting the 2003 International Fire Code.

Adoption of the International Building Code (IBC) is mandated by State law. The IBC contains many provisions that will support economic development and encourage lower-cost housing. It also provides enhanced public safety by strongly encouraging installation of fire sprinkler systems, and includes the most current standards for designing buildings to withstand natural hazards such as earthquake and high winds.

Seattle has a long and successful history of local amendments to the Building Code. We are proposing to retain those local amendments that have had a significant beneficial impact on the city, and we propose to eliminate local amendments that are no longer essential. Many of our existing amendments have been incorporated into the International Codes.

The department's Construction Codes Advisory Board has reviewed and approved these proposed ordinances. CCAB, which consists of representatives of the design, development and construction industry, has devoted countless hours to reviewing and discussing these proposals.

Thank you for your consideration of this legislation. Adoption of the new codes will provide additional flexibility of building design and will enhance safety for the citizens of Seattle. Should you have questions, please contact Maureen Traxler at 233-3892.

Sincerely,

GREG NICKELS
Mayor of Seattle

cc: Honorable Members of the Seattle City Council

ACTING CITY CLERK

600 Fourth Avenue, 7th Floor, P.O. Box 94749, Seattle, WA 98124-4749
Tel: (206) 684-4000, TDD: (206) 684-8811 Fax: (206) 684-5360, E:mail: mayors.office@seattle.gov
An equal employment opportunity, affirmative action employer. Accommodations for people with disabilities provided upon request.

Maureen Traxler
Date May 6, 2004:
2003 IBC
Version #:1

Form revised March 16, 2004

FISCAL NOTE FOR NON-CAPITAL PROJECTS

Department:	Contact Person/Phone:	DOF Analyst/Phone:
DPD	Maureen Traxler/233-3892	Barbara Gangwer/616-0768

Legislation Title:
An ordinance relating to Building and Construction Codes: amending Chapter 22.100 of the Seattle Municipal Code, the Seattle Building Code; adopting Chapters 2 through 28, Chapters 31 through 33, and Chapter 35 of the 2003 International Building Code; amending Chapter 2, Definitions; Chapter 3, Use and Occupancy Classification; Chapter 4, Special Detailed Requirements Based on Use and Occupancy; Chapter 5, General Building Heights and Areas; Chapter 6, Types of Construction; Chapter 7, Fire-resistance-rated Construction; Chapter 9, Fire Protection Systems; Chapter 10, Means of Egress; Chapter 11, Accessibility; Chapter 12, Interior Environment; Chapter 13, Energy Efficiency; Chapter 14, Exterior Walls; Chapter 15, Roof Assemblies and Rooftop Structures; Chapter 16, Structural Design; Chapter 17, Structural Tests and Special Inspections; Chapter 18, Soils and Foundations; Chapter 19, Concrete; Chapter 21, Masonry; Chapter 23, Wood; Chapter 25, Gypsum Board and Plaster; Chapter 27, Electrical; Chapter 31, Special Construction; Chapter 32, Encroachments into the Public Right-of-way; Chapter 33, Safeguards During Construction; and Chapter 35, Referenced Standards; and adding a new Chapter 1 related to administration, permitting and enforcement; a new Chapter 29, Plumbing Systems; a new Chapter 30, Elevators and Conveying Systems; and a new Chapter 34, Existing Structures; and repealing the 1997 Seattle Building Code.

- **Summary of the Legislation:**
Adopts the 2003 International Building Code with Seattle amendments.

- **Background:**
This bill is one of six related ordinances that adopt the International Building, Residential, Mechanical, Fuel Gas, and Fire codes, and Seattle amendments to the Washington State Energy Code. The International Codes are model codes adopted pursuant to RCW 19.27.031. DPD is proposing amendments to the Building, Residential, Mechanical and Fuel Gas codes; the Fire Department is proposing amendments to the Fire Code.

This ordinance has been reviewed by the Construction Codes Advisory Board and other industry experts.

_X_ This legislation does not have any financial implications.

ACTING CITY CLERK

ord 121519

STATE OF WASHINGTON – KING COUNTY

--ss.

No. ORDINANCE IN FULL

175406
CITY OF SEATTLE,CLERKS OFFICE

Affidavit of Publication

The undersigned, on oath states that he is an authorized representative of The Daily Journal of Commerce, a daily newspaper, which newspaper is a legal newspaper of general circulation and it is now and has been for more than six months prior to the date of publication hereinafter referred to, published in the English language continuously as a daily newspaper in Seattle, King County, Washington, and it is now and during all of said time was printed in an office maintained at the aforesaid place of publication of this newspaper. The Daily Journal of Commerce was on the 12th day of June, 1941, approved as a legal newspaper by the Superior Court of King County.

The notice in the exact form annexed, was published in regular issues of The Daily Journal of Commerce, which was regularly distributed to its subscribers during the below stated period. The annexed notice, a

CT:121519 ORD IN FULL

was published on

8/5/2004

Subscribed and sworn to before me on

8/5/2004

Notary public for the State of Washington,
residing in Seattle

JENNIFER A. PATZER
COMMISSION EXPIRES
NOTARY
PUBLIC
OCT 12 2001
STATE OF WASHINGTON

City of Seattle

ORDINANCE 121519

AN ORDINANCE relating to Building and Construction Codes: amending Chapter 22.100 of the Seattle Municipal Code, the Seattle Building Code; adopting Chapters 2 through 28, Chapters 31 through 33, and Chapter 35 of the 2003 International Building Code; amending Chapter 2, Definitions; Chapter 3, Use and Occupancy Classification; Chapter 4, Special Detailed Requirements Based on Use and Occupancy; Chapter 5, General Building Heights and Areas; Chapter 6, Types of Construction; Chapter 7, Fire-resistance-rated Construction; Chapter 9, Fire Protection Systems; Chapter 10, Means of Egress; Chapter 11, Accessibility; Chapter 12, Interior Environment; Chapter 13, Energy Efficiency; Chapter 14, Exterior Walls; Chapter 15, Roof Assemblies and Rooftop Structures; Chapter 16, Structural Design; Chapter 17, Structural Tests and Special Inspections; Chapter 18, Soils and Foundations; Chapter 19, Concrete; Chapter 21, Masonry; Chapter 23, Wood; Chapter 25, Gypsum Board and Plaster; Chapter 27, Electrical; Chapter 31, Special Construction; Chapter 32, Encroachments into the Public Right-of-way; Chapter 33, Safeguards During Construction; and Chapter 35, Referenced Standards; and adding a new Chapter 1 related to administration, permitting and enforcement, a new Chapter 29, Plumbing Systems, a new Chapter 30, Elevators and Conveying Systems, and a new Chapter 34, Existing Structures; and repealing the 1997 Seattle Building Code.

BE IT ORDAINED BY THE CITY OF SEATTLE AS FOLLOWS:

Section 1. Section 22.100.010 of the Seattle Municipal Code is amended as follows:

SMC 22.100.010 Adoption of the ((~~Uniform~~)) International Building Code. The following are hereby adopted and by this reference made a part of this subtitle: ((~~Uniform~~)) International Building Code, ((~~1997~~)) 2003 edition, excepting Chapters 1, ((~~11,~~)) 29, 30((~~, 32~~)) and 34 ((~~and including the Uniform Building Code Standards, 1997 edition,~~)) as published by the International ((~~Conference of Building Officials~~)) Code Council; ASME A17.1-((~~1996~~)) 2000 with ASME A17.1a-((~~1994~~)) 2002 and ASME A17b-2003 Addenda and Appendices A through M, and Appendix O, Safety Code for Elevators and Escalators, excepting ((~~Part XIX~~)) Section 5.10 of ASME A17.1, Elevators Used for Construction; ASME A18.1-1999, A18.1a-2001 and A18.1b-2001, Safety Standard For Platform Lifts and Stairway Chairlifts; Washington Administrative Code Chapter ((~~296-81, Sections .005 through .270, Safety rules governing elevators, dumbwaiters, escalators and other lifting devices; moving walks; Washington Administrative Code Chapter 296-91, Safety regulations for casket lifts in mortuaries; Washington Administrative Code Chapter 296-93 for Material lifts; and Washington Administrative Code Chapter 296-95, Minimum standards for existing conveyances~~)) 296-96, Safety regulations for all elevators, dumbwaiters, escalators and other conveyances. One copy of each of the above is filed with the City Clerk in C.F. ((~~302707~~))

The Seattle Building Code shall consist of the adopted provisions of the ((~~Uniform~~)) International Building Code ((~~and Uniform Building Code Standards, 1997~~)) 2003 edition, and the codes and standards listed above, together with the amendments and additions thereto adopted.

Section 2. The 1997 Seattle Building Code adopted by Ordinance 119079 and amended by Ordinances 120379 is hereby repealed.

Section 3. Chapter 1 of the Seattle Building Code shall read as follows:

Chapter 1

ADMINISTRATION

NOTE: Chapter 1 is entirely Seattle amendments to the International Building Code and is not underlined.

constitute a hazard to safety, health or public welfare by rea
deterioration, instability, dilapidation, obsolescence, dama
abandonment as specified in this code or any other effecti

102.2 Emergency Orders. Whenever the building offic
structure, or portion thereof is in such a dangerous and un
imminent hazard to life or limb, the building official may
that the building or structure, or portion thereof be resto
specify the time for compliance. The order may also re
portion thereof, be vacated within a reasonable time; bu
extreme danger, the order may specify immediate vacat
authorize disconnection of the utilities or energy source
Section 104.6. No person shall occupy the building or
date on which the building is required to be vacated un
thereof, is restored to a safe condition as required by
unlawful for any person to fail to comply with an
official.

102.3 Hazard Correction Order. Whenever in the
building, structure or premises exists, the building
specifying the conditions causing the building, stru
the owner or other person responsible for the unsa
the condition. In lieu of correction, the owner may
official analyzing said conditions and establishing
fact, safe. The building official may require the
licensed engineer and may require compliance w
person to fail to comply with a hazard co rection

SECTION 103

VIOLATIONS AND PENALTIES

103.1. Violations. It shall be a violation of th
erect, construct, enlarge, repair, move, improve
inspect or maintain any building or structure
the provisions of this code.

It shall be a violation of this code for any
abet, counsel, encourage, hire, command, in
to comply with this code.

It shall be a violation of this code for any
to install any device, appliance or equipment
of this code or which has not been approved

103.2. Notice of Violation. If after investi
standards or requirements of this code have
notice of violation upon the owner or other
notice of violation shall state the standards
action, if any, is necessary to comply with
reasonable time for compliance. The notice
person by regular first class mail addressed
addition, a copy of the notice may be posted
of violation shall be considered an order
shall be deemed to limit or preclude any