MT:mt
6/23/95
V1

117721

ORDINANCE 117721

AN ORDINANCE relating to the Seattle Building Code, repealing Section 22.100.010 (Ordinances 116012, as amended by Ordinances 116655 and 117573) and adding a new Section 22.100.010; adopting Chapters 2 through 10, 12 through 29, 31, 33 and 35 of the 1994 Uniform Building Code; adopting the 1994 Uniform Building Code Standards; amending the adopted Uniform Building Code by adding a new Chapter 1 related to administration, enforcement and permitting, a new Chapter 30 regulating elevators, escalators and material lifts, a new Chapter 32 regulating construction in the right of way, marquees, awnings and signs, and a new Chapter 34 regulating existing structures; amending Chapter 2, Definitions; amending Chapter 3 and 4 , regulating uses and occupancies; amending Chapter 5, providing general building limitations; amending Chapter 6, regulating types of construction; amending Chapter 7, fire-resistant materials and construction; amending Chapter 8, regulating interior finishes; amending Chapter 9, regulating fire-protection systems; amending Chapter 10, regulating means of egress; amending Chapter 12, regulating interior environment; amending Chapter 13, regulating energy conservation; amending Chapter 14, regulating exterior wall coverings; amending Chapter 15, regulating roof coverings and roof structures; amending Chapters 16-23 providing engineering standards for quality, design, and materials of construction; and amending Chapter 24, regulating glazing; amending Chapter 25, regulating gypsum board and plaster; amending Chapter 26, regulating plastic; amending Chapters 27, 28 and 29, regulating electrical, mechanical and plumbing systems; amending Chapter 31, regulating chimneys, fireplaces and barbecues; amending Chapter 33, regulating site work and demolitions; as regulated and allowed by the State Building Code Act, Chapter 19.27 of the Revised Code of Washington.

Section 1. As of December 3, 1995, Section 22.100.010 of the Seattle Municipal Code adopting the 1991 Uniform Building Code and Uniform Building Code Standards (Ordinance 116012 as amended by 116655 and 117573) is hereby repealed, and a new Section 22.100.010 is added to the Seattle Municipal Code to read as follows:

22.100.010 Adoption of the Uniform Building Code

The following are hereby adopted and by this reference made a part of this subtitle: Uniform Building Code, 1994 edition, excepting Chapters 1, 11, 30, 32 and 34 and including the Uniform Building Code Standards, 1994 edition, as published by the International Conference of Building Officials; ASME A17.1-1993 with ASME A17.1a-1994 Addenda, Safety Code for Elevators and Escalators, excepting Part XIX of ASME A17.1, Elevators Used for Construction; Washington Administrative Code Chapter 296-81, Sections .005 through .370, Safety rules governing elevators, dumbwaiters, escalators and other lifting devices - moving walks; Washington Administrative Code Chapter 296-91, Safety regulations for casket lifts in mortuaries; Washington Administrative Code Chapter 296-93 for Material lifts; and Washington Administrative Code Chapter 296-95, Minimum standards for existing conveyances. One copy of each of the above is filed with the City Clerk in C. F. 300680.

The Uniform Building Code and Uniform Building Code Standards, 1994 edition, and the codes and standards listed above, together with the amendments and additions thereto adopted, shall constitute the Seattle Building Code.

Section 2. Wherever in this ordinance there is a conflict between metric units of measurement and English units, the English units shall govern.

Section 3. Wherever in this ordinance there is a reference to "WSBC", it shall mean the Washington State Building Code, Washington Administrative Code Chapter 51-30. Wherever there is a reference to "VIAQ" it shall mean the Washington State Ventilation and Indoor Air Quality Code, Washington Administrative Code Chapter 51-13. The provisions of the Washington State Building Code and the Ventilation and Indoor Air Quality Code contained herein are adopted as part of the Seattle Building Code.

Section 4. The 1994 Uniform Building Code is amended by adding Chapter 1 as follows:

Chapter 1
ADMINISTRATION

SECTION 101--TITLE, PURPOSE AND SCOPE

101.1 Title. This subtitle shall be known as the "Seattle Building Code" and may be so cited, and is referred to herein as "this building code" or "this code."

101.2 Purpose. The purpose of this building code is to provide minimum standards to safeguard life or limb, health, property and public welfare by regulating and controlling the design, construction, quality of materials, occupancy, location and maintenance of all buildings and structures within the City and certain equipment specifically regulated herein.

The purpose of this building code is to provide for and promote the health, safety and welfare of the general public, and not to create or otherwise establish or designate any particular class or group of persons who will or should be especially protected or benefited by the terms of this building code.

101.3 Scope. The provisions of this building code shall apply to the construction, alteration, moving, demolition, repair and occupancy of any building or structure within the City, except work located primarily in a public way, public utility towers and poles, mechanical equipment not specifically regulated in this building code, and hydraulic flood control structures.

Additions, alterations, repairs, and changes of occupancy or character of occupancy in all buildings and structures shall comply with the provisions for new buildings and structures, except as otherwise provided in Chapter 34 of this building code.

Code Alternate CA101.3: A building which fully complies with the Washington State Building Code may be permitted for construction and occupancy without meeting all requirements of this Seattle Building Code, provided the building complies with the following Seattle Building Code provisions, when applicable:

1. Section 311.2.3.6 and Section 601.5.3 special provisions for mini-storage facilities;
2. Section 307.1 and Section 1627.1 special requirements for pre-application meetings for hazardous occupancies and building with unusual load resisting structural designs;
3. Section 310.2 and Section 1005.7 special requirements for one-hour construction and corridor construction for certain residential occupancies;
4. Section 511 fire district;
5. Section 402 special provisions for atriums;

6. Section 403 special provisions for high rise buildings;

7. Section 904.2.2, 904.2.4, 904.2.8 and 904.2.9 special sprinkler requirements for certain basement-like stories and certain storage and R-1 occupancies;

8. Section 502 addressing provisions;

9. Section 412 special provisions for floating homes; and

10. Section 413 special provisions for waterfront piers.

101.4 Internal Consistency. Where in any specific case, different sections of this building code specify different materials, methods of construction or other requirements, the most restrictive shall govern. Where there is a conflict between a general requirement and a specific requirement, the specific requirement shall be applicable.

Wherever in this building code reference is made to the Appendix, the provisions in the Appendix shall not apply unless specifically adopted.

WSBC WAC 51-30-004: Conflict with Ventilation Code. In the case of conflict between the ventilation requirements of Chapter 12 of this code and the ventilation requirements of Chapter 3.1 of the Mechanical Code, the provisions of Chapter 3.1 shall govern.

SECTION 102--UNSAFE BUILDINGS, STRUCTURES OR PREMISES

102.1 Definition. For the purpose of this section unsafe buildings, structures or premises shall be defined to include all buildings or structures, whether erected before or after the effective date of this building code, and all premises immediately surrounding buildings or structures which are structurally unsound or unsafe or not provided with adequate egress, or which constitute a fire hazard, or are otherwise dangerous to human life or which in relation to existing occupancy constitute a hazard to safety, health or public welfare by reason of inadequate maintenance, deterioration, instability, dilapidation, obsolescence, damage by fire or other causes or abandonment as specified in this building code or any other effective ordinance.

102.2 Emergency Orders. Whenever the building official finds that any building or structure, or portion thereof is in such a dangerous and unsafe condition as to constitute an imminent hazard to life or limb, the building official may issue an emergency order directing that the building or structure, or portion thereof be restored to a safe condition. The order shall specify the time for compliance. The order may also require that the building or structure, or portion thereof, be vacated within a reasonable time, to be specified in the order. In the case of extreme danger, the order may specify immediate vacation of the building or structure, or may authorize disconnection of the utilities or energy source pursuant to the notice provisions of Section 104.6. No person shall occupy the building or structure, or portion thereof after the date on which the building is required to be vacated until the building or structure, or portion thereof, is restored to a safe condition as required by the order and this code. It shall be unlawful for any person to fail to comply with an emergency order issued by the building official.

102.3 Hazard Correction Order. Whenever the building official finds that an unsafe building, structure or premises exists, the building official may issue a hazard correction order specifying the conditions causing the building, structure or premises to be unsafe and directing the owner or other person responsible for the unsafe building, structure or premises to correct the condition. In lieu of correction, the owner may submit a report or analysis to the building official analyzing said conditions and establishing that the building, structure or premises is, in fact, safe. The building official may require that the report or analysis be prepared by a licensed engineer and may require compliance with Chapter 34. It shall be unlawful for any person to fail to comply with a hazard correction order as specified in this subsection.

SECTION 103--VIOLATIONS AND PENALTIES

103.1. Violations. It shall be a violation of this code for any person, firm or corporation to erect, construct, enlarge, repair, move, improve, remove, convert, demolish, equip, occupy, inspect or maintain any building or structure in the City, contrary to or in violation of any of the provisions of this building code.

It shall be a violation of this code for any person, firm or corporation to knowingly aid, abet, counsel, encourage, hire, commend, induce or otherwise procure another to violate or fail to comply with this code.

It shall be a violation of this code for any person, firm or corporation to use any material or to install any device, appliance or equipment which does not comply with applicable standards of this code or which has not been approved by the building official.

103.2. Notice of Violation. If after investigation the building official determines that standards or requirements of this building code have been violated, the building official may serve a notice of violation upon the owner or other person responsible for the action or condition. The notice of violation shall state the standards or requirements violated, shall state what corrective action, if any, is necessary to comply with the standards or requirements, and shall set a reasonable time for compliance. The notice shall be served upon the owner or other responsible person by personal service, certified mail with return receipt requested or registered mail with return receipt requested or registered mail addressed to the last known address of such person. The notice of violation shall be considered an order of the building official. Nothing in this subsection shall be deemed to limit or preclude any action or proceeding pursuant to Sections 102 or 104 of this building code, and nothing in this section shall be deemed to obligate or require the building official to issue a notice of violation prior to the imposition of civil or criminal penalties in this section.

103.3 Civil Penalties. Any person, firm or corporation failing to comply with the provisions of this building code shall be subject to a cumulative civil penalty in an amount not to exceed $500 per day for each violation from the date the violation occurs or begins until compliance is achieved. In cases where the building official has issued a notice of violation, the violation will be deemed to begin, for purposes of determining the number of days of violation, on the date compliance is required by the notice of violation.

103.4 Criminal Penalty. Anyone who violates or fails to comply with any order issued by the building official pursuant to this code or who removes, mutilates, destroys or conceals a notice issued or posted by the building official shall, upon conviction thereof, be punished by a fine of not more than $1,000 or by imprisonment for not more than 360 days, or by both such fine and imprisonment. Each day's violation or failure to comply shall constitute a separate offense.

Anyone violating or failing to comply with any of the provisions of this building code and who within the past five years has had a judgment against them for civil penalties arising from a violation of the building code, shall upon conviction thereof, be fined in a sum not to exceed $500 or by imprisonment for not more than 180 days, or by both such fine and imprisonment. Each day's violation or failure to comply shall constitute a separate offense.

103.5 Additional Relief. The building official may seek legal or equitable relief to enjoin any acts or practices and abate any condition which constitutes a violation of this building code when civil or criminal penalties are inadequate to effect compliance.

103.6 Notices. It shall be unlawful for any person to remove, mutilate, destroy or conceal any notice issued or posted by the building official pursuant to the provisions of this building code, or any notice issued or posted by the building official in response to a natural disaster or other emergency.

The building official may record a copy of any order or notice with the Department of Records and Elections of King County.

The building official may record with the Department of Records and Elections of King County a notification that a permit has expired without a final inspection after reasonable efforts have been made to provide a final inspection.

SECTION 104--ORGANIZATION AND ENFORCEMENT

104.1 Jurisdiction of Department of Construction and Land Use. The "Department of Construction and Land Use" shall be the code enforcement agency in the City of Seattle for this building code. The Department shall be under the administrative and operational control of the Director of the Department of Construction and Land Use who shall be the building official.

104.2 Powers and Duties of the Building Official. The building official is authorized and directed to enforce this building code, except where authority as elsewhere provided in this building code is specifically vested in the Director of Public Health, the fire chief or the Director of Engineering. Compliance with the requirements of this building code shall be the obligation of the owner of the building, structure, or premises, the duly authorized agent of the owner, or other person responsible for the condition or work, and not of the City or any of its officers or employees.

104.3 Deputies. The building official may appoint such officers, inspectors and assistants and other employees as shall be authorized from time to time. The building official may deputize such employees as may be necessary to carry out the functions of the Department of Construction and Land Use.

104.4 Right of Entry. With the consent of the owner or occupier of a building or premises, or pursuant to a lawfully issued warrant, the building official may enter a building or premises at any reasonable time to perform the duties imposed by this code.

104.5 Stop Orders. Whenever any work is being done contrary to the provisions of this building code, or in the event of dangerous or unsafe conditions related to construction or demolition, the building official may order the affected work stopped by a notice describing the violation in writing, posted on the premises or served on any person responsible for the condition or work. It shall be unlawful for any person to engage in or to cause any further work to be done until authorization from the building official is received.

104.6 Occupancy Violations. Whenever any building or structure is being occupied contrary to the provisions of this building code, the building official may order such occupancy discontinued and the building or structure, or portion thereof, vacated by notice, posted on the premises or served on any person causing such occupancy to be continued.

Any person occupying the building or structure shall discontinue the occupancy within 10 days after receipt or posting of such notice or shall make the building or structure, or portion thereof, comply with the requirements of this building code; provided, however, that in the event of an unsafe building, Section 102 may apply. It shall be unlawful for any person to fail to comply with an order or notice issued by the building official.

104.7 Liability. Nothing contained in this building code is intended to be nor shall be construed to create or form the basis for any liability on the part of the City, or its officers, employees or agents, for any injury or damage resulting from the failure of a building to conform to the provisions of this building code, or by reason or in consequence of any inspection, notice, order, certificate, permission or approval authorized or issued or done in connection with the implementation or enforcement of this building code, or by reason of any action or inaction on the part of the City related in any manner to the enforcement of this building code by its officers, employees or agents.

Neither the building official nor any employee charged with the enforcement of this code shall be personally liable for any damage that accrues to persons or property as a result of any act or omission committed in the discharge of their duties, provided that the building official or employee acted in good faith and without malice.

This code shall not be construed to relieve from or lessen the responsibility of any person owning, operating or controlling any building or structure for any damages to persons or property caused by defects, nor shall the Department of Construction and Land Use or the City of Seattle be held to have assumed any such liability by reason of the inspections authorized by this code or any permits or certificates issued under this code.

104.8 Duties of the Fire Chief. The duties of the fire chief shall be as defined in the Fire Code.

104.9 Responsibilities of Project Architect or Structural Engineer of Record. It is the responsibility of the Project Architect or Structural Engineer of Record to ensure that the information on the contract documents submitted for a building permit is complete and to the best of his/her knowledge conforms with the requirements of this building code and other pertinent laws and ordinances.

104.10 Responsibilities of Structural Engineer of Record. It is the responsibility of the Structural Engineer of Record to:

1. Design the primary structure;

2. Specify design loads, configurations, controlling dimensions, deflection limits and/or other criteria necessary for the design of secondary structural components and sub-systems and the selection of structurally qualified products;

3. Determine the adequacy and conformance of the application of the structurally qualified products with the design intent of the City approved contract documents;

4. Review for compatibility with the design intent of the City approved contract documents the shop drawings for the primary structural parts and design and shop drawings for secondary structural parts for the following structural elements:

Wood trusses	Glue-lam beams
Steel joists	Structural steel
Steel decking	Prefabricated stair systems
Precast concrete piles	Post-tensioned floor systems
Curtain wall systems	Precast prestress planks
Major skylight frames	Precast concrete/masonry wall panels

The building official may approve additions to, or deletions from this list.

5. When required by the building official, review the compatibility with the design intent of the City approved contract documents of the design and shop drawings for mechanical and electrical life safety equipment anchorage required by Section 403.10, including generators, pressurization fans, fire pumps and elevator drive and suspension systems.

If there is no Structural Engineer of Record on the project, the Project Architect shall assume these responsibilities.

For the purpose of this section primary structure and secondary structural parts shall be defined as follows:

1. Primary Structure consists of the foundation(s), structural floor(s), roof and walls, bracing members, columns, all other structural components and all connections within and between these elements, which, acting together, provide a complete stable structural framework.

2. Secondary Structural Part (Component or Subsystem) is a structurally significant portion of the building that is supported by the primary structure, but which does not contribute to the strength or stability of the primary structure. Such a part must have internal structural integrity to perform its function and must have its interactions with, and its attachments to the primary structure analyzed and designed to assure its proper integration within the total structure.

104.11 Responsibilities of Contractor. It is the responsibility of the Contractor to perform all the work in conformance with the City approved contract documents.

104.12 Responsibilities of Plans Examiner. It is the responsibility of the plans examiner to verify that the description of the work in an application for permit and permit plans is substantially complete, and to require corrections where to the best of the plans examiner's knowledge the plans do not conform to this building code or other pertinent laws and ordinances.

104.13 Responsibilities of Field Inspector. It is the responsibility of the field inspector to make called inspections to verify that the work in progress conforms with the approved plans and to require corrections where to the best of the field inspector's knowledge the work either does not conform to the plans or where the work is in violation of this building code or other pertinent laws and ordinances.

104.14 Modifications. The building official may modify the requirements of this code for individual cases provided the building official finds: (1) there are practical difficulties involved in carrying out the provisions of this code; (2) the modification is in conformity with the intent and purpose of this code; and (3) the modification will provide a reasonable level of fire protection and structural integrity when considered together with other safety features of the building or other relevant circumstances. The building official may, but is not required to, record the approval of modifications and any relevant information in the files of the building official or on the approved permit plans.

104.15 Alternate Materials, Methods of Construction and Design. This code does not prevent the use of any material, design or method of construction not specifically allowed or prohibited by this code, provided the alternate has been approved and its use authorized by the building official.

The building official may approve an alternate, provided he/she finds that the proposed alternate complies with the provisions of this code and that the alternate, when considered together with other safety features of the building or other relevant circumstances, will provide at least an equivalent level of strength, effectiveness, fire resistance, durability, safety and sanitation. Certain code alternates have been pre-approved by the building official and are identified in this code as numbered code alternates.

The building official may require that sufficient evidence or proof be submitted to reasonably substantiate any claims regarding the use or suitability of the alternate. The building official may, but is not required to, record the approval of modifications and any relevant information in the files of the building official or on the approved permit plans.

104.16 Tests. Whenever there is insufficient evidence of compliance with any of the provisions of this code or evidence that any material or construction does not conform to the requirements of this code, the building official may require tests as proof of compliance to be made at no expense to the City.

Test methods shall be specified by this code or by other recognized test standards. If there are no recognized and accepted test methods for the proposed alternate, the building official shall determine the test procedures. All tests shall be made by an approved agency. Reports of such tests shall be retained by the building official..

104.17 Rules of the Building Official.

104.17.1 Authority of Building Official. The building official shall have the power to render interpretations of this code and to adopt and enforce rules and regulations supplemental to this code as may be deemed necessary in order to clarify the application of the provisions of this code. Such interpretations, rules and regulations shall be in conformity with the intent and purpose of this code. The building official is authorized to promulgate, adopt and issue the following rules:

1. "Building Construction Standards" to promulgate standards which are acceptable as a method or as an alternative design for meeting code required performance criteria, to recognize new technical data affecting code requirements and to eliminate conflicts among code requirements.

2. "Code Interpretations" to interpret and clarify conditions or language expressed in this building code.

3. Any other rule necessary for the administration of the purpose and intent of this code.

104.17.2 Procedure for Adoption of Rules. The building official shall promulgate, adopt and issue rules according to the procedures as specified in Chapter 3.02 of the Administrative Code, Seattle Municipal Code.

104.18 Appeals. Appeals from decisions or actions pertaining to the administration and enforcement of this code shall be addressed to the building official. The appellant may request a review by three or more members of the Construction Codes Advisory Board, convened by the Chair. The issue of the appeal shall be taken into account by the Chair when selecting members to hear an appeal. The results of this appeal shall be advisory only.

SECTION 105--CONSTRUCTION CODES ADVISORY BOARD

105.1 Establishment. There is hereby created a "Construction Codes Advisory Board" ("Board") to consist of 13 voting members, appointed by the Mayor and subject to confirmation by the City Council. The Board membership shall consist of one representative of each of the following professions or organizations. The representative of a profession need not be of the profession but may be a representative of an organization of such professionals.

1 architect;
1 structural engineer;
1 electrical engineer;
1 heating, refrigeration and air-conditioning engineer;
1 general contractor;
1 electrical contractor;
1 commercial building owner or operator;
1 apartment building owner or operator;
1 developer and/or contractor of residential projects;
1 member of organized labor; and
3 members of the general public.

A representative of each of the following departments shall be ex officio, non-voting members of the Board:

Seattle Fire Department;
Seattle City Light; and
Seattle King County Health Department.

105.2 Duties of Board.

105.2.1 General. The Board shall act in an advisory capacity for all of its duties. The Board shall meet on call either by the building official or the Board Chair, subject to timely notice.

105.2.2 Code Adoption and Amendment. The Board may examine proposed new editions and amendments to the following codes and regulations:

Seattle Building Code - Chapter 22.100 S.M.C.*
Seattle Mechanical Code - Chapter 22.400 S.M.C.
Seattle Boiler Code - Chapter 22.450 S.M.C.
Seattle Energy Code - Chapter 22.700 S.M.C.
Seattle Electrical Code - Chapter 22.300 S.M.C.
Grading regulations contained in the Stormwater, Grading and Drainage Control Code - Chapter 22.800 through 22.808 S.M.C.
Building Code-related provisions of the Housing and Building Maintenance Code - Chapter 22.206.

* S.M.C. is the Seattle Municipal Code.

The Board may make recommendations to the building official and to the City Council for adoption and amendment of these codes.

105.2.3 Review of Director's Rules. The Board may examine proposed administrative rules relating to the codes and regulations listed above and make recommendations to the building official.

105.2.4 Appeals. The Board shall serve as an advisory hearing body for appeals sought under Section 104.18 of the Seattle Building Code, Section 110 of the Seattle Mechanical Code and Section 208 of the Seattle Electrical Code. The final decision on any appealable matter shall be made by the building official.

105.3 Organization. The Board shall organize, elect a chair and any other officers as may be established by the Board. The Board shall adopt rules of procedure. There shall be a committee of the Board for each code assigned to its review. Committees shall consist of Board members and may include additional members such as representatives of the general public and professions not specifically represented on the Board. Non-Board members of committees shall be appointed by the Chair. The Chair may, from time to time, appoint special topic subcommittees.

105.4 Terms of Service. Terms of Board members shall be three years dating from the day of expiration of the preceding term; provided, a member whose term has expired shall continue to serve until a successor is appointed and confirmed. Terms on the Board shall be staggered so that the terms of not more than 5 positions expire concurrently. Vacancies shall be filled for any unexpired term in the same manner as original appointment.

105.5 Removal of Board Member. A member may be removed by the Mayor, subject to a vote of a majority of members of the City Council.

105.6 Compensation of Board Members. No member shall receive any compensation for service on the Board.

SECTION 106--BUILDING PERMITS

106.1 Permits Required. It shall be unlawful to erect, construct, enlarge, alter, repair, move, improve, remove, change the occupancy of, or demolish any building or structure in the City, or allow the same to be done, without first obtaining a building permit for each such building or structure from the building official. All work shall comply with this building code, even where no permit is required.

106.2 Exempted Work. A building permit shall not be required for the following:

1. Minor repairs or alterations which, as determined by the building official, cost the owner $2,500 or less in any 6-month period, provided that no structural changes are made and egress, light, air and ventilation are not reduced.

2. Miscellaneous minor work including the following: patio and concrete slabs on grade, painting a building, repointing a chimney unless structural changes are made, installing kitchen cabinets, paneling or other surface finishes over existing wall and ceiling systems applied in accordance with Sections 801-806 and insulating existing buildings where no structural changes are made.

3. One-story detached accessory buildings used for greenhouse, tool or storage shed, or similar uses, provided:

   3.1. The projected roof area does not exceed 120 square feet; and

   3.2. The building is not placed on a concrete foundation other than a slab on grade.

4. Fences not over 8 feet high which do not have masonry or concrete elements above 6 feet.

5. Cases, counters and partitions not over 5 feet 9 inches high.

6. Retaining walls and rockeries which are not over 4 feet in height measured from the bottom of the footing to the top of the wall, provided:

   6.1 There is no surcharge or impoundment of Class I, II or III-A liquids.

6.2 Construction is not in a critical area or an environmentally sensitive area, nor supports soils in areas of geologic hazard, steep slope or having landslide potential as identified in the environmentally sensitive and critical area regulations contained in Chapters 25.05 and 25.09 of the Seattle Municipal Code.

6.3 Possible failure would likely cause no damage to adjoining property or structures.

7. Platforms, walks and driveways not more than 18 inches above grade and not over any basement or story below.

8. Temporary motion picture, television and theater stage sets and scenery.

9. Window awnings supported by an exterior wall of Group R, Division 3, and Group U Occupancies when projecting not more than 54 inches.

10. Prefabricated swimming pools, spas and similar equipment accessory to a Group R, Division 3 occupancy in which the pool walls are entirely above the adjacent grade and if the capacity does not exceed 5,000 gallons.

11. Replacement of roofing materials and siding. This shall not include structural changes, replacement of sheathing or alterations to doors and windows.

12. School, park or private playground equipment including playhouses and tree houses.

13. Removal and replacement of underground storage tanks that are subject to regulation by a state or federal agency.

Exemption from the permit requirements of this building code shall not be deemed to grant authorization for any work to be done in any manner in violation of the provisions of this building code or any other laws or ordinances of the City.

106.3 Other Permits Required. Unless otherwise exempted by this or other pertinent codes, separate master use, plumbing, electrical and mechanical permits shall be required for the above exempted items.

106.4 Flood Hazard Areas. In addition to the permit required by this section, all work to be performed in areas of special flood hazard, as identified in the report entitled "Flood Insurance Study for King County, Washington and Incorporated Areas" and the accompanying Flood Insurance Rate Maps and filed in C.F. 295948, is subject to additional standards and requirements, including floodplain development approval or a Floodplain Development License, as set forth in Chapter 25.06, the Seattle Floodplain Development Ordinance.

106.5 Application for Permit

106.5.1 Application. To obtain a permit, the applicant shall first file an application in writing on a form furnished by the Department of Construction and Land Use for that purpose. Every such application shall:

1. Identify and describe the work to be covered by the permit for which application is made.

2. Describe the land on which the proposed work is to be done by legal description, property address or similar description that will readily identify and definitely locate the proposed building or work.

3. Provide contractor's business name, address, phone number and current contractor registration number (required if contractor has been selected).

4. Be accompanied by plans, and other data as required in Section 106.5.2.

5. State the valuation of any new building or structure or any addition, remodeling or alteration to an existing building including cost breakdown between additions and alterations.

6. Be signed by the owner of the property or building, or his/her authorized agent who may be required to submit evidence to indicate such authority.

7. Give such other data and information as may be required by the building official, including, but not limited to, master use and shoreline permits and building identification plans.

8. Indicate the name of the owner and contractor and the name, address and phone number of a contact person.

8. Topographic plans, including original and final contours, location of all buildings and structures on and, when required by the building official, adjacent to the site, and cubic yards of cut and fill.

A survey of the property prepared by a land surveyor licensed by the State of Washington shall be required for all new construction, and for additions or accessory buildings where the building official has reason to believe that there may be an intrusion into required open areas or over the property line.

9. Where any building or structure is to be erected or constructed on property abutting an unimproved or partially improved street or alley, such plans shall also include a profile showing the established or proposed grade of such street or alley, based upon information obtained from the Director of Engineering relating to the proposed finished elevations of the property and improvements thereon.

106.5.2.5 Information on First Sheet. The first or general note sheet of each set of plans shall specify the following, as applicable:

1. The building and street address of the work.

2. The name and address of the owner and person who prepared the plans.

3. Legal description of the property.

4. Type of occupancy of all parts of the building as defined in this building code including notation of fixed fire protection devices or systems.

5. Zoning classification of the property and existing and proposed uses of the structure as defined in the Land Use Code.

6. Indication of location within the fire district as defined in this building code, if applicable.

7. Type of construction as defined in this building code.

8. Number of stories and basements as defined in this building code.

9. Variances, conditional uses, special exceptions, including project numbers, approval and approval extension dates.

10. Where applicable, a description of the design selected and approved at a Section 307 hazardous occupancy pre-design conference, a Section 402 atrium pre-design conference, a Section 403 highrise building pre-design conference, a Section 1627 seismic design pre-design conference or a similar conference on a building subject to Fire Code Article 93.

106.5.2.6 Structural Notes. Plans submitted for buildings with an occupant load of 50 or more, buildings of more than two stories, buildings of more than 4,500 square feet total floor area or buildings or other structures that are determined by the building official to embody hazards or complex structural concepts shall include applicable information including, but not limited to, the following:

1. Design loads: Snow load, live loads and live load reductions and lateral loads.

When required by the building official, the structural notes for plans engineered to Part III, Earthquake Design, of Chapter 16 shall include the factors of the base shear formula used in the design;

2. Foundations: Foundation investigations, allowable bearing pressure for spread footings, allowable load capacity of piles, pile driving formulas, lateral earth pressure;

3. Soil fill and back fill: Type, compaction and drainage;

4. Masonry: Type and strength of units, strength or proportions of mortar and grout, type and strength of reinforcement, method of testing, design strength;

5. Wood: Species or species groups, and grades of sawn lumber, glued-laminated lumber, plywood and assemblies, type of fasteners;

6. Concrete: Design strengths, mix designs, type and strength of reinforcing steel, welding of reinforcing steel, restrictions, if any;

7. Steel and aluminum: Specification types, grades and strengths, welding electrode types and strengths;

8. Assignment of responsibilities for inspection and testing during construction, and the degree of inspection and testing;

9. Computations, stress diagrams, shop and fabrication drawings and other data sufficient to show the adequacy of the plans shall be submitted when required by the building official.

In lieu of detailed structural notes the building official may approve minor references on the plans to a specific section or part of this building code or other ordinances or laws.

106.5.2.7 Fire-Resistive Notes. The building official may require that plans for buildings more than two stories in height of other than Groups R, Division 3 and U Occupancies indicate how required structural and fire-resistive integrity will be maintained where a penetration will be made for electrical, mechanical, plumbing and communication conduits, pipes and similar systems.

The building official may require that, when required for fire-resistive construction, the method of installation of wall and ceiling coverings and the protection of structural parts be specified on the plans unless the listing which documents the rating specifies a method no more restrictive than the minimum standards of Chapter 25.

106.5.3 Construction Inspection Notes. The engineer or architect of record shall include in the final permit documents the following:

1. Special inspections required by Section 1701.

2. Other structural inspections required by the engineer or architect of record.

106.6 Permit Issuance

106.6.1 General. The application, plans, specifications and other data filed by an applicant for permit shall be reviewed by the building official. Such plans may be reviewed by other departments of the City to check compliance with the laws and ordinances under their jurisdiction. The building official shall mail notice to or otherwise notify the applicant within twenty working days of application if additional information is required to commence building permit application review. The Director shall approve, condition or deny the application within ninety working days after the receipt of all information and corrections requested of the applicant for the building and any related master use permit applications. If the building official finds that the work as described in an application for permit and the plans, specifications and other data filed therewith substantially conforms to the requirements of this building code and other pertinent laws and ordinances and that the fees specified in the Permit Fee Ordinance have been paid, he/she shall issue a permit therefor to the applicant who becomes the permit holder or authorized agent.

EXCEPTIONS: 1. The building official may issue a permit for the construction of part of a building or structure before complete plans for the whole building or structure have been submitted or approved, provided that the proposed project complies with the State Environmental Policy Act as adopted by the City (Chapter 25.05 Seattle Municipal Code) and as amended and the Land Use and Zoning Ordinances, as amended; and provided further that adequate information and plans have been filed and checked to assure compliance with all pertinent requirements of this and other pertinent codes. The holder of such a permit shall proceed at his/her own risk without the assurance that the permit for the entire building or structure will be granted.

2. After approval of a Master Use Permit as required by the Land Use Code, a permit for excavation may be issued.

The building official may condition a permit where he/she determines that risks associated with development, construction, ownership and occupation in areas of the city, including, but not limited to potential slide areas, can be reduced to an acceptable level. The building official may deny such permit where he/she determines that the risks cannot be reduced to an acceptable level.

106.6.2 Compliance with Approved Plans and Permit. When the building official issues a permit, he/she shall endorse the permit in writing and endorse in writing or stamp the plans **APPROVED.** Such approved plans and permit shall not be changed, modified or altered without authorization from the building official, and all work shall be done in accordance with the approved plans and permit except as the building official may require during field inspection to correct errors or omissions.

106.6.3 Amendments to the Permit. When substitutions or changes are made during construction, approval shall be secured prior to execution, however, the building inspector may approve minor modifications to the plans

for work not reducing the structural strength or fire and life safety of the structure. The building inspector shall determine if it is necessary to revise the approved plans. Substitutions or changes made during construction subject to special inspection required by Section 1701 shall be approved by the building official. Substitutions, changes and clarifications shall be shown on two sets of plans which shall be submitted to and approved by the building official, accompanied by fees specified in the Permit Fee Ordinance prior to occupancy. These substitutions and changes shall conform to the requirements of this building code and other pertinent laws and ordinances.

106.6.4. Cancellation of Permit Application. An application shall be deemed abandoned and void if a permit is not issued after a period of sixty days from the date of written notice of approval for issuance or if complete corrections are not received after a period of sixty days from the date of written notification of required corrections for compliance with this code; provided that the building official may extend the period for issuance or submission of corrections if it is determined that there are good reasons for the delay, which are satisfactory to the building official, or if a different schedule is agreed upon in writing before the end of the sixty day period. A request for the extension must be submitted in writing before the end of the sixty day period. If the permit application is canceled, the site may be inspected to verify that no work has taken place. The application and any accompanying plans and specifications shall be destroyed. If the application is being reviewed concurrently with a Master Use Permit application, and it is for a project vested to prior Land Use Code or Zoning Ordinance provisions, and the project does not conform with the codes in effect while it is being reviewed for Master Use Permit approval, cancellation of the building permit application under the provisions of this section shall cause the concurrent cancellation of the Master Use Permit application.

106.7 Retention of Plans. One set of approved plans, which may be on microfilm, shall be retained by the building official. One set of approved plans shall be returned to the applicant and shall be kept at the site of the building or work at all times during which the work authorized is in progress for use by the inspection personnel.

106.8 Validity of Permit. The issuance or granting of a permit or approval of plans shall not be construed to be a permit for, or an approval of, any violation of any of the provisions of this building code or other pertinent laws and ordinances. No permit presuming to give authority to violate or cancel the provisions of this building code shall be valid, except insofar as the work or use which it authorizes is lawful.

The issuance of a permit based upon plans shall not prevent the building official from thereafter requiring the correction of errors in said plans or from preventing building operations being carried on thereunder when in violation of this building code or of other pertinent laws and ordinances of the City.

The issuance of a building permit shall not prevent the building official from requiring correction of conditions found to be in violation of this building code or other pertinent laws and ordinances of the City, nor shall the period of time for which any such permit is issued be construed to extend or otherwise affect any period of time for compliance specified in any notice or order issued by the building official or other administrative authority requiring the correction of any such conditions.

106.9 Expiration and Renewal.

106.9.1 General. Permits and renewed permits shall expire eighteen months from the date of issuance.

EXCEPTIONS: 1. Initial permits for major construction projects that require more than eighteen months to complete, according to a construction schedule submitted by the applicant, may be issued for a period that provides reasonable time to complete the work but in no case longer than three years.

2. Permits which expire in less than eighteen months may be issued where the building official determines a shorter period is appropriate.

106.9.2 Renewal. Permits may be renewed and renewed permits may be further renewed by the building official provided the following conditions are met:

1. Application for renewal shall be made within the thirty-day period immediately preceding the date of expiration of the permit;

2. The work authorized by the permit has been started and is progressing at a rate approved by the building official. Progress justifying renewal of a permit, except as specified by Item 3, may include, but is not limited to, requesting of a required inspection, the arranging of financing, selection of contractors and subcontractors, securing other necessary permits and licenses, site preparation such as demolition, clearing and excavation, soils investigation and work done to overcome unusual construction difficulties; and

3. If an application for renewal is made either more than eighteen months after the date of mandatory compliance with a new or revised edition of the building code or after the effective date of an amendment to applicable provisions of the Land Use or Zoning Codes, the permit shall not be renewed unless:

3.1 The building official determines by plans examination that the permit complies, or is modified to comply, with the code or codes in effect on the date of application renewal; or

3.2 The work authorized by the permit is substantially underway and progressing at a rate approved by the building official. Progress justifying renewal of the permit shall be evidenced by notification by the permit holder that a construction step is ready for an inspection required by Section 108.5 of this code.

Permits may also be renewed where commencement or completion of the work authorized by the permit is delayed by litigation, appeals, strikes or other causes related to the work authorized by the permit, beyond the permit holder's control.

106.9.3 Reestablishment. A new permit shall be required to complete work where a permit has expired and was not renewed.

EXCEPTION: A permit which has been expired for less than one year may be reestablished upon approval of the building official provided it complies with Section 106.9.2, Items 2 and 3 above.

106.9.4 Suspension or Revocation. The building official may, by written order, suspend or revoke a permit issued under the provisions of this building code whenever the permit is issued in error or on the basis of incorrect information supplied, or in violation of any ordinance or regulation or any provisions of this building code.

106.10 Temporary Permits

106.10.1 Tents and Similar Facilities. The building official may issue a nonrenewable permit to erect and maintain for a period not to exceed six months, a tent or other temporary structure to be used for religious services, conventions, circuses, carnivals, fairs, special sales or similar uses.

Such structures shall be removed before the expiration of the six month period specified on the permit and such removal shall be guaranteed by a cash deposit with the building official or by a surety bond, the amount of which, in either case, shall be fixed by the building official.

Note: The Land Use Code may impose additional restrictions on tents and temporary structures.

The conditions relative to the cash deposit or the bond shall be such that in case of failure of the occupant or owner to conform to any of the lawful requirements of the City relative to erection, maintenance or removal of said tent or other structure, the properly authorized officers of the City may enter the premises and take such steps as are necessary to conform to such lawful requirements, and shall recover the cost thereof from the cash deposit or bond.

The construction of the structure shall be subject to reasonable safeguards for the persons and property as the building official shall prescribe. The nature and extent of fire-extinguishing equipment and decorations shall be subject to the requirements of the fire chief, and the sanitary facilities shall meet the requirements of the Director of Public Health.

106.10.2 Temporary Structures. Temporary structures such as reviewing stands and other miscellaneous structures conforming to the requirements of this building code, and sheds, canopies, or fences used for the protection of the public around and in conjunction with construction work may be erected by special permit from the building official for a limited period of time and such building or structure shall be subject to the bonding, removal and safety provisions noted in Section 106.10.1. Temporary buildings or structures in the right-of-way shall be regulated by the Director of Engineering.

106.10.3 Temporary Office Trailers. The building official may issue a non-renewable building/use permit for eighteen months for the installation of a Commercial Coach or Modular Home as a temporary office or other uses as may be determined by the building official, subject to the following:

1. The Commercial Coach shall be identified by a State of Washington black sticker located by the door. The structure may be placed on a temporary foundation and shall be anchored to resist wind and seismic lateral forces.

2. The Modular Home shall be identified by a State of Washington gold sticker located by the door. It will be accepted as long as no heavy storage is anticipated for the temporary office use. The structure may be placed on a temporary foundation and shall be anchored to resist wind and seismic lateral forces.

3. A plot plan shall be submitted to verify compliance with the Land Use Code and to check exposure to other buildings.

4. The proposed use must be one permitted outright under the Land Use Code and comply with all other pertinent laws and ordinances.

5. Construction offices shall be regulated by Section 106.10.4.

106.10.4 Construction Buildings. The building official may issue a permit to erect and maintain construction offices, dry shacks and similar temporary buildings, including material and equipment storage, all for the purpose of constructing an improvement.

EXCEPTION: Construction offices and similar temporary buildings located on the same premises for which a construction permit has been issued, do not require an additional temporary permit.

Such structures shall be removed within 14 days after the termination of the permit, and such removal shall be guaranteed by a cash deposit with the building official or by a surety bond, the amount of which, in either case, shall be fixed by the building official.

The conditions relative to the cash deposit or the bond shall be such that in case of failure of the occupant or owner to conform to any of the lawful requirements of the City relative to erection, maintenance or removal of said construction offices, dry shacks or similar temporary buildings, the properly authorized officers of the City may enter the premises and take such steps as are necessary to conform to such lawful requirements, and shall recover the cost thereof from the cash deposit or bond.

The construction of the structure shall be subject to reasonable safeguards for persons and property as the building official shall prescribe; the nature and extent of fire-extinguishing equipment shall be subject to the requirements of the fire chief, and the sanitary facilities shall meet the requirements of the Director of Public Health.

SECTION 107--FEES

A fee for each building permit and for other activities related to the enforcement of this code shall be paid as set forth in the Permit Fee Ordinance.

SECTION 108--INSPECTIONS

108.1 General. All construction or work for which a permit is required shall be subject to inspection by the building official, and certain types of construction shall have special inspections by registered special inspectors as specified in Section 1701.

A survey of the lot may be required by the building official to verify compliance of the structure with approved plans.

108.2 Inspection Requests. It shall be the duty of the owner of the property or his/her authorized agent, or the person designated by the owner/agent to do the work authorized by a permit, to notify the building official that work requiring inspection as specified in this section and Section 1701, is ready for inspection.

It shall be the duty of the person requesting any inspections required by this code to provide access to and means for proper inspection of such work. It shall be the duty of the permit holder to cause the work to be accessible and exposed for inspection purposes until approved by the building official. Neither the building official nor the City shall be liable for expense entailed in the required removal or replacement of any material to allow inspection.

108.3 Inspection Record. Work requiring a permit shall not be commenced until the permit holder or his/her agent has posted an inspection record in a conspicuous place on the premises and in a position which allows the building official to conveniently make the required entries thereon regarding inspection of the work. This record shall be maintained in such a position by the permit holder until final approval has been granted by the building official.

108.4 Approvals Required. No work shall be done on any part of the building or structure beyond the point indicated in each successive inspection without first obtaining the written approval of the building official. Such

written approval shall be given only after an inspection has been made of each successive step in the construction as indicated by each of the inspections required in Section 108.5.

There shall be a final inspection and approval of all buildings when completed and ready for occupancy.

Approval as a result of an inspection shall not be construed to be an approval of a violation of the provisions of this code or of other pertinent laws and ordinances of the City. Inspections presuming to give authority to violate or cancel the provisions of this code or of other pertinent laws and ordinances of the City shall not be valid.

108.5 Required Inspections.

108.5.1 General. No required reinforcing steel or structural framework of any part of any building or structure shall be covered or concealed in any manner whatsoever without first obtaining the approval of the building official.

EXCEPTION: Modular homes and commercial coaches identified by State of Washington stickers as specified in Section 106.10.3 and placed upon a permanent foundation approved and inspected by the building official.

The building official, upon notification by the permit holder or his/her agent, of the property address and permit number, shall make the following inspections and shall either approve that portion of the construction as completed or shall notify the permit holder or his/her agent where the construction fails to comply with the law.

108.5.2 Foundation and Site Inspection: To be made after trenches are excavated and forms erected and when all materials for the foundation are delivered on the job. Where concrete from a central mixing plant (commonly termed "ready mix") is to be used, materials need not be on the job.

108.5.3 Concrete Slab or Under-Floor Inspection: To be made after all in-slab or under-floor building service equipment, conduit, piping accessories and other ancillary equipment items are in place but before any concrete is poured or floor sheathing installed, including the subfloor.

108.5.4 Frame Inspection: To be made after the roof, all framing, fire-blocking and bracing are in place and all pipes, chimneys and vents are complete and the rough electrical, plumbing, and heating wires, pipes and ducts are approved.

108.5.5 Insulation Inspection: To be made after all insulation and vapor barriers are in place but before any gypsum board or plaster is applied.

108.5.6 Lath and/or Gypsum Board Inspection: For shear walls, to be made after lathing and/or gypsum board, interior and exterior, is in place, but before any plastering is applied or before gypsum board joints and fasteners are taped and finished.

108.5.7 Final Inspection: To be made after finish grading and the building is completed and before occupancy.

108.6 Special Inspections. For special inspections, see Chapter 17.

108.7 Other Inspections. In addition to the called inspections specified above, the building official may make or require any other inspections of any construction work to ascertain compliance with the provisions of this code and other pertinent laws and ordinances which are enforced by the building official.

Where work, for which any permit or approval is required, is commenced or performed prior to making formal application and receiving the building official's permission to proceed, the building official may make a special investigation inspection before a permit may be issued for such work. Where a special investigation is made, a special investigation fee may be assessed in accordance with the Permit Fee Ordinance.

108.8 Reinspections. The building official may require a reinspection when work for which inspection is called is not complete, corrections called for are not made, the inspection record is not properly posted on the work site, the approved plans are not readily available to the inspector, for failure to provide access on the date for which inspection is requested, or when deviations from plans which require the approval of the building official have been made without proper approval.

For the purpose of determining compliance with Section 3402, Maintenance, the building official or the fire chief may cause any structure to be reinspected.

The building official may assess a reinspection fee as set forth in the Permit Fee Ordinance for any action listed above for which reinspection may be required, whether or not a reinspection is actually performed. A reinspection fee shall not be assessed the first time the work subject to inspection is rejected for failure to comply with the requirements of this building code.

In instances where reinspection fees have been assessed, no additional inspection of the work shall be performed until the required fees have been paid.

SECTION 109--CERTIFICATE OF OCCUPANCY

109.1 Occupancy. No new building or structure shall be used or occupied, and no change in the existing occupancy classification of a building or structure, or portion thereof, shall be made until the building official has issued a Certificate of Occupancy therefor.

> **EXCEPTION:** Group R, Division 3, and Group U Occupancies provided buildings and structures of Group R, Division 3 shall not be used or occupied until approved for occupancy after final inspection.

Issuance of a Certificate of Occupancy shall not be construed as an approval of a violation of the provisions of this code or other pertinent laws and ordinances of the City. Certificates presuming to give authority to violate or cancel the provisions of this code or of other pertinent laws and ordinances of the City shall not be valid.

109.2 Change in Occupancy. Changes in the occupancy of a building shall not be made except as specified in Section 3405 of this building code.

109.3 Certificate Issued. After satisfactory completion of inspections, when it is found that the building or structure requiring a Certificate of Occupancy complies with the provisions of this building code, the Fire Code and other pertinent laws and ordinances of the City, the building official shall issue a Certificate of Occupancy which shall contain the following information:

1. The building permit number;
2. The address of the building;
3. A description of that portion of the building for which the certificate is issued;
4. A statement that the described portion of the building complies with the requirements of this building code for group and division of occupancy and the activity for which the proposed occupancy is classified; and
5. The name of the building official.

109.4 Temporary Certificate. A Temporary Certificate of Occupancy may be issued by the building official for the use of a portion, or portions, of a building or structure prior to the completion of the entire building or structure provided all devices and safeguards for fire protection and life safety, as required by this building code, the Fire Code, and other pertinent laws and ordinances of the City, are maintained in a safe and usable condition.

109.5 Posting. A Certificate of Occupancy shall be posted in a conspicuous place on the premises and shall not be removed except by the building official.

109.6 Revocation. The building official may, in writing, suspend or revoke a Certificate of Occupancy issued under the provisions of this code whenever the certificate is issued in error, or on the basis of incorrect information supplied, or when it is determined that the building or structure or portion thereof is in violation of any pertinent laws or ordinances of the City or any of the provisions of this code.

Section 5. Section 201.1 of the 1994 Uniform Building Code is amended as follows:

201.1 General. For the purpose of this code, certain terms, phrases, words and their derivatives shall be construed as specified in this chapter and elsewhere in this code where specific definitions are provided. Terms, phrases and words used in the singular include the plural and the plural the singular. Terms, phrases and words used in the masculine gender include the feminine and the feminine the masculine.

Where terms, phrases and words are not defined, they shall have their ordinary accepted meanings within the context with which they are used. *Webster's Third New International Dictionary of the English Language, Unabridged*, copyright 1986, shall be considered as providing ordinarily accepted meanings.

Interpretation I201: Whenever a Uniform or National code is referenced in this code, it shall mean the Seattle edition of that code, including local amendments.

Section 6. Section 202 of the 1994 Uniform Building Code is amended as follows:

SECTION 202 -- A

ACCESS FLOOR SYSTEM is an assembly consisting of panels mounted on pedestals to provide an under-floor space for the installations of mechanical, electrical, communication or similar systems or to serve as an air-supply or return-air plenum.

ACI is the American Concrete Institute, Box 19150, Redford Station, Detroit, Michigan 48219

ADDITION is an extension or increase in floor area or height of a building or structure.

AEROSOL is a product which is dispensed by a propellant from a metal can up to a maximum size of 33.8 fluid ounces (1000 mL) or a glass or plastic bottle up to a size of 4 fluid ounces (118.2 mL), other than a rim-vented container.

VIAQ: AGGREGATE, for the purpose of emission control design is crushed stone, stone, or other inert material or combinations thereof having hard, strong, durable pieces.

AGRICULTURAL BUILDING is a structure designed and constructed to house farm implements, hay, grain, poultry, livestock or other horticultural products. This structure shall not be a place of human habitation or a place of employment where agricultural products are processed, treated or packaged; nor shall it be a place used by the public.

VIAQ: AIR BARRIER is a continuous material or system of materials utilized for the purpose of minimizing the movement of air across a defined boundary, and capable of withstanding the maximum pressure developed across it, without failing by becoming significantly more leaky.

VIAQ: AIR, SUPPLY is that air delivered to the conditioned space and used for ventilation, heating, cooling, humidification or dehumidification.

AISC is the American Institute of Steel Construction, Inc., One East Wacker Drive, Suite 3100, Chicago, Illinois 60601-2001.

ALLEY is any public way or thoroughfare ((~~less than~~)) 16 feet (4877 mm) or less but not less than 10 feet (3048 mm) in width which has been dedicated or deeded to the public for public use.

ALTER or ALTERATION is any change, addition or modification in construction or occupancy.

AMUSEMENT BUILDING. See Section 408.2.

9. Substantially conform with the Land Use Code, critical areas regulations and building code regulations in effect on the date that the application is submitted.

106.5.2 Plans and Specifications.

106.5.2.1 General. Plans, engineering calculations, diagrams and other data shall be submitted in two or more sets with each application for a permit.

EXCEPTION: The building official may waive the submission of plans, calculations, diagrams and other data, if he/she finds that the nature of the work applied for is such that reviewing of plans is not necessary to obtain compliance with this building code.

106.5.2.2 Preparation by Licensed Professionals. Plans, computations and specifications for all work shall be prepared and designed by or under the direct supervision of an architect or structural engineer licensed to practice under the laws of the State of Washington. Plans and specifications for work not involving structural design shall be prepared by a professional engineer or architect qualified in the proposed work. Each sheet of plans shall bear the seal and the signature of the licensee.

EXCEPTION: When authorized by the building official, plans and specifications need not be prepared by an engineer or architect licensed by the State of Washington for the following:

1. One- and two-family dwellings.
2. New buildings or structures, and additions, alterations or repairs of conventional light frame construction, having a total valuation of less than $30,000.
3. Nonstructural alterations and repairs having a total valuation of less than $30,000, excluding electrical and mechanical systems, fixtures, equipment, interior finish and millwork.
4. The building official may accept the design of a licensed professional engineer for assembly line products or designed specialty structural products.
5. Other work as specified in rules promulgated by the Director.

106.5.2.3 Clarity of Plans. Plans shall be drawn to a clearly indicated and commonly accepted scale upon substantial paper such as blueprint quality or standard drafting paper. Tissue paper, posterboard or cardboard will not be accepted. The plans shall be of microfilm quality and limited to a minimum size of 18 inches by 18 inches and a maximum size of 41 inches by 54 inches.

EXCEPTION: The plans for metal plate connected wood trusses may be not less than 8-1/2 inches by 11 inches for single family structures and no less than 11 inches by 17 inches for all other structures.

106.5.2.4 Information Required on Plans. Plans shall include the following, as applicable:

1. A plot plan showing the width of streets, alleys, yards and courts.
2. The location (and/or location within a building), floor area, story, height, type of construction and occupancy classification as defined by the building code and use as defined by the Land Use Codes of the proposed building and of every existing building on the property.
3. Where there are more than two buildings located on a property, a building identification plan identifying the location of each building on the property and identifying each building by a numbering system unrelated to address. Such plan shall not be required where a plan for the site is already on file and no new buildings are being added to the site.
4. Types of heating and air conditioning systems.
5. Architectural plans, including floor plans, elevations and door and finish schedules showing location of all doors, windows, mechanical equipment, shafts, pipes, vents and ducts.
6. Structural plans, including foundation plan and framing plans.
7. Cross-sections and construction details for both architectural and structural plans including wall sections, foundation, floor and roof details, connections of structural members and types of construction material.

ANSI is the American National Standards Institute, 1430 Broadway, New York, New York 10018.

APARTMENT HOUSE is any building or portion thereof which contains three or more dwelling units and, for the purpose of this code, includes residential condominiums.

APPROVED, as to materials and types of construction, refers to approval by the building official as the result of investigation and tests conducted by the building official, or by reason of accepted principles or tests by recognized authorities, technical or scientific organizations.

APPROVED AGENCY is an established and recognized agency regularly engaged in conducting tests or furnishing inspection services, when such agency has been approved.

APPROVED FABRICATOR is an established and qualified person, firm or corporation approved by the building official pursuant to Section 1701.7 of this code.

ARCHITECT. See "Project Architect or Engineer."

AREA. See "floor area."

ASSEMBLY BUILDING is a building or portion of a building used for the gathering together of 50 or more persons for such purposes as deliberation, education, instruction, worship, entertainment, amusement, drinking or dining or awaiting transportation.

ASTM is the American Society for Testing and Materials, 1916 Race Street, Philadelphia, Pennsylvania 19103.

ATRIUM is an opening through two or more floor levels other than enclosed stairways, elevators, hoistways, escalators, plumbing, electrical, air–conditioning or other equipment, which is closed at the top and not defined as a mall. Floor levels, as used in this definition, do not include balconies within assembly occupancies or mezzanines which comply with Section 506, Exception 3.

AUTOMATIC, as applied to fire–protection devices, is a device or system providing an emergency function without the necessity of human intervention and activated as a result of a predetermined temperature rise, rate of rise of temperature or increase in the level of combustion products.

AWNING. See Section 3204.

AWNING SIGN. See Section 3204.

Section 7. Section 203 of the 1994 Uniform Building Code is amended as follows:

SECTION 203 --B

BALCONY is that portion of the seating space of an assembly room, the lowest part of which is raised 4 feet (1219 mm) or more above the level of the main floor and shall include the area providing access to the seating area or serving only as a foyer.

BALCONY, EXTERIOR EXIT. See Section 1001.2.

BASEMENT is any floor level below the first story in a building ((~~, except that a floor level in a building having only one floor level shall be classified as a basement unless such floor level qualifies as a first story as defined herein.~~)) See "Story".

BOILER, HIGH–PRESSURE, is a boiler furnishing steam at pressures in excess of 15 pounds per square inch (psi) (103.3 kPa) or hot water at temperatures in excess of 250°F. (121°C.), or at pressures in excess of 160 psi (1002.4 kPa).

BOILER ROOM is any room containing a steam or hot–water boiler.

BUILDING is any structure used or intended for supporting or sheltering any ((~~use or~~)) occupancy.

BUILDING, EXISTING, is a building erected prior to the adoption of this code, or one for which a legal building permit has been issued, under the prior code, and construction has been started within eighteen months after adoption of this code.

BUILDING OFFICIAL is the officer or other designated authority charged with the administration and enforcement of this code, or the building official's duly authorized representative.

Interpretation I203: BUILDING OFFICIAL is the Director of the Department of Construction and Land Use. As used in this code, the term includes authorized representatives of the Director of the Department of Construction and Land Use.

BUILDING PERMIT APPLICATION, FULLY COMPLETE is an application which the building official has judged to meet the requirements of Section 106.5. (It shall be the application for all the architectural and structural parts of a building, except when the building official allows application for portions of buildings, the application shall be at least the complete structural frame.)

BULK HANDLING is the transferring of flammable or combustible liquids from tanks or drums into smaller containers for distribution.

Section 8. Section 204 of the 1994 Uniform Building Code is amended as follows:

SECTION 204 --C

CAST STONE is a precast building stone manufactured from portland cement concrete and used as a trim, veneer or facing on or in buildings or structures.

CENTRAL HEATING PLANT is environmental heating equipment which directly utilizes fuel to generate heat in a medium for distribution by means of ducts or pipes to areas other than the room or space in which the equipment is located.

C.F.R. is the Code of Federal Regulations, a regulation of the United States of America available from the Superintendent of Documents, United States Government Printing Office, Washington, D.C. 20402.

CHIEF OF THE FIRE DEPARTMENT or FIRE CHIEF is the head of the fire department or a regularly authorized deputy.

CHILD DAY CARE means the care of children during any period of a 24-hour day.

CHILD DAY CARE HOME, FAMILY is a child day care facility, licensed by the state, located in the family abode of the person or persons under whose direct care and supervision the child is placed, for the care of twelve or fewer children, including children who reside at the home.

Interpretation I204: CITY, as used in this code, is the City of Seattle, Washington.

COMBUSTIBLE LIQUID. See the Fire Code.

CONGREGATE RESIDENCE is any building or portion thereof which contains facilities for living, sleeping and sanitation, as required by this code, and may include facilities for eating and cooking, for occupancy by other than a family. A congregate residence may be a shelter, convent, monastery, dormitory, fraternity or sorority house but does not include jails, hospitals, nursing homes, hotels or lodging houses.

CONDOMINIUM, RESIDENTIAL. See "apartment house."

CONTRACT DOCUMENTS are those design drawings, written specifications, letters, sketches and other documents that fully define the work to be constructed.

CONTROL AREA is a building or portion of a building within which the exempted amounts of hazardous materials may be stored, dispensed, handled or used.

CORROSIVE is a chemical that causes visible destruction of, or irreversible alterations in, living tissue by chemical action at the site of contact. A chemical is considered to be corrosive if, when tested on the intact skin of albino rabbits by the method described in the United States Department of Transportation in Appendix A to 49 C.F.R. 173, it destroys or changes irreversibly the structure of the tissue at the site of contact following an exposure period of four hours. This term shall not refer to action on inanimate surfaces.

COURT is a space, open and unobstructed to the sky, located at or above grade level on a lot and bounded on three or more sides by walls of a building.

Section 9. Section 205 of the 1994 Uniform Building Code is amended as follows:

SECTION 205 --D

((~~DANGEROUS BUILDINGS CODE is the *Uniform Code for the Abatement of Dangerous Buildings* promulgated by the International Conference of Building Officials, as adopted by this jurisdiction.~~))

DAY CARE CENTER is an agency, other than a family child day care home, which provides care for children for periods of less than 24 hours.

DAY TREATMENT CENTER is an agency which provides care, supervision and appropriate therapeutic and educational services during part of the 24-hour day for children.

VIAQ: DEPRESSURIZATION SYSTEM is a contaminated soil gas control technique that depressurizes the space below a concrete slab or other soil gas retarder relative to the space above it. The purpose of the depressurization system is to maintain a slightly lower pressure in the soil gas under the slab or other soil gas retarder, compared to the indoor pressure above it, to ensure that flows are from the indoors to the soil, thus preventing mass transport of contaminated soil gas to the indoor air.

DIRECTOR. See "Building Official."

DISPENSING is the pouring or transferring of any material from a container, tank or similar vessel, whereby vapors, dusts, fumes, mists or gases may be liberated to the atmosphere.

DISPERSAL AREA, SAFE. See Section 1021.2.

DRAFT STOP is a material, device or construction installed to restrict the movement of air within open spaces of concealed areas of building components such as crawl spaces, floor–ceiling assemblies, roof–ceiling assemblies and attics.

DWELLING is any building or portion thereof which contains not more than two dwelling units.

DWELLING UNIT is any building or portion thereof which contains living facilities, including provisions for sleeping, eating, cooking and sanitation, as required by this code, for not more than one family, or a congregate residence for 10 or less persons.

Section 10. Section 206 of the 1994 Uniform Building Code is amended as follows:

SECTION 206 - E

EFFICIENCY DWELLING UNIT is a dwelling unit containing only one habitable room.

ELECTRICAL CODE is the *National Electrical Code* promulgated by the National Fire Protection Association, as adopted by this jurisdiction.

ELEVATOR CODE is the safety code for elevators, dumbwaiters, escalators and moving walks as adopted by this jurisdiction (see ((~~Appendix~~)) Chapter 30).

EMERGENCY CONTROL STATION is an approved location on the premises of a Group H, Division 6 Occupancy where signals from emergency equipment are received and which is continually staffed by trained personnel.

Interpretation I205: ENERGY CODE is the Seattle Energy Code.

ENGINEER. See "Project Architect or Engineer" and "Structural Engineer of Record."

EXISTING BUILDINGS. See "building, existing."

EXIT. See Section 1001.2.

EXIT COURT. See Section 1001.2.

EXIT ILLUMINATION. See Section 1001.2.

EXIT PASSAGEWAY. See Section 1001.2.

EXIT PLACARD. See Section 1001.2.

EXIT SIGN. See Section 1001.2

EXTERIOR STAIRWAY. See Section 1001.2

Section 11. Section 207 of the 1994 Uniform Building Code is amended as follows:

SECTION 207 --F

FABRICATION AREA (fab area) is an area within a Group H, Division 6 Occupancy in which there are processes involving hazardous production materials and may include ancillary rooms or areas such as dressing rooms and offices that are directly related to the fab area processes.

FAMILY is ((~~an individual or two or more persons related by blood or marriage or a group of not more than five persons (excluding servants) who need not be related by blood or marriage living together in a dwelling unit.~~)) a non-profit housekeeping unit consisting of any number of related persons; eight or fewer non-related, non-transient persons; or eight or fewer related and non-related, non-transient persons other than congregate residences, fraternities, sororities, or groups occupying dormitory buildings or residential clubs.

WSBC: FAMILY ABODE is a single dwelling unit and accessory buildings occupied for living purposes by a family which provides permanent provisions for living, sleeping, eating, cooking and sanitation.

FAMILY CHILD DAY CARE HOME. See "Child Day Care Home, Family."

FIRE ASSEMBLY. See Section 713.2.

FIRE CODE is the *Uniform Fire Code* promulgated by the International Fire Code Institute, as adopted by this jurisdiction.

FIRE RESISTANCE or FIRE–RESISTIVE CONSTRUCTION is construction to resist the spread of fire, details of which are specified in this code.

FIRE-RETARDANT COVERING. See Section 3204.

FIRE–RETARDANT–TREATED WOOD is any wood product impregnated with chemicals by a pressure process or other means during manufacture, and which, when tested in accordance with U.B.C. Standard 8–1 for a

period of 30 minutes, shall have a flame spread of not over 25 and show no evidence of progressive combustion. In addition, the flame front shall not progress more than $10^1/_2$ feet (3200 mm) beyond the center line of the burner at any time during the test. Materials which may be exposed to the weather shall pass the accelerated weathering test and be identified as Exterior type, in accordance with U.B.C. Standard 23–5. Where material is not directly exposed to rainfall but exposed to high humidity conditions, it shall be subjected to the hygroscopic test and identified as Interior Type A in accordance with U.B.C. Standard 23–5.

All materials shall bear identification showing the fire performance rating thereof. Such identifications shall be issued by an approved agency having a service for inspection of materials at the factory.

FLAMMABLE LIQUID. See the Fire Code.

FLOOR AREA is the area included within the surrounding exterior walls of a building or portion thereof, exclusive of vent shafts, ((~~and~~)) courts and gridirons. The floor area of a building, or portion thereof, not provided with surrounding exterior walls shall be the usable area under the horizontal projection of the roof or floor above.

FM is Factory Mutual Engineering and Research, 1151 Boston–Providence Turnpike, Norwood, Massachusetts 02062.

FOAM PLASTIC INSULATION is a plastic which is intentionally expanded by the use of a foaming agent to produce a reduced–density plastic containing voids consisting of hollow spheres or interconnected cells distributed throughout the plastic for thermal insulating or acoustical purposes and which has a density less than 20 pounds per cubic foot (320 kg/m^3).

FOOTING is that portion of the foundation of a structure which spreads and transmits loads directly to the soil or the piles.

FRONT OF LOT is the front boundary line of a lot bordering on the street and, in the case of a corner lot, may be either frontage.

Section 12. Section 208 of the 1994 Uniform Building Code is amended as follows:

SECTION 208 — G

GARAGE is a building or portion thereof in which a motor vehicle containing flammable or combustible liquids or gas in its tank is stored, repaired or kept.

GARAGE, PRIVATE, is a building or a portion of a building, not more than 1,000 square feet (93 m^2) in area, in which only motor vehicles used by the tenants of the building or buildings on the premises are stored or kept. (See Section 308.)

GARAGE, PUBLIC, is any garage other than a private garage.

GRADE (Adjacent Ground Elevation) is the lowest point of elevation of the finished surface of the ground, paving or sidewalk within the area between the building and the property line or, when the property line is more than 5 feet (1524 mm) from the building, between the building and a line 5 feet (1524 mm) from the building.

For grade of structures built over water, see Section 413.2.

GRADE (Lumber) is the classification of lumber in regard to strength and utility.

GUARDRAIL is a system of building components located near the open sides of elevated walking surfaces for the purpose of minimizing the possibility of an accidental fall from the walking surface to the lower level.

GUEST is any person hiring or occupying a room for living or sleeping purposes.

GUEST ROOM is any room or rooms used or intended to be used by a guest for living or sleeping purposes. Every 100 square feet (9.3 m^2) of superficial floor area in a dormitory shall be considered to be a guest room.

Section 13. Section 209 of the 1994 Uniform Building Code is amended as follows:

SECTION 209 --H

HABITABLE SPACE (ROOM) is space in a structure for living, sleeping, eating or cooking. Bathrooms, toilet compartments, closets, halls, storage or utility space, and similar areas, are not considered habitable space.

HANDLING is the deliberate transport of materials by any means to a point of storage or use.

HANDRAIL is a railing provided for grasping with the hand for support. See also Section 208, definition of "guardrail."

HAZARDOUS PRODUCTION MATERIAL (HPM) is a solid, liquid or gas that has a degree of hazard rating in health, flammability or reactivity of 3 or 4 and which is used directly in research, laboratory or production processes which have, as their end product, materials which are not hazardous.

HEALTH HAZARD is a classification of a chemical for which there is statistically significant evidence based on at least one reproducible study conducted in accordance with established scientific principles that acute or chronic health effects may occur in exposed persons. The term "health hazard" includes chemicals which are ((~~carcinogens,~~)) toxic or highly toxic agents, ((~~reproductive toxins,~~)) irritants, corrosives, ((~~sensitizers,~~)) hepatotoxins, nephrotoxins, neurotoxins, agents which can have an acute effect ((~~act~~)) on the hematopoietic system, and agents ((~~which damage~~)) that have acute effects on the lungs, skin, eyes or mucous membranes.

HEIGHT OF BUILDING is the vertical distance above a reference datum measured to the highest point of the coping of a flat roof or to the deck line of a mansard roof or to the average height of the highest gable of a pitched or hipped roof. The reference datum shall be selected by either of the following, whichever yields a greater height of building:

1. The elevation of the highest adjoining sidewalk or ground surface within a 5–foot (1524 mm) horizontal distance of the exterior wall of the building when such sidewalk or ground surface is not more than 10 feet (3048 mm) above lowest grade.

2. An elevation 10 feet (3048 mm) higher than the lowest grade when the sidewalk or ground surface described in Item 1 above is more than 10 feet (3048 mm) above lowest grade.

The height of a stepped or terraced building is the maximum height of any segment of the building.

HELIPORT is an area of land or water or a structural surface which is used, or intended for use, for the landing and take–off of helicopters, and any appurtenant areas which are used, or intended for use, for heliport buildings and other heliport facilities.

HELISTOP is the same as a heliport, except that no refueling, maintenance, repairs or storage of helicopters is permitted.

HIGHLY TOXIC MATERIAL is a material which produces a lethal dose or a lethal concentration which falls within any of the following categories:

1. A chemical that has a median lethal dose (LD_{50}) of 50 milligrams or less per kilogram of body weight when administered orally to albino rats weighing between 200 and 300 grams each.

2. A chemical that has a median lethal dose (LD_{50}) of 200 milligrams or less per kilogram of body weight when administered by continuous contact for 24 hours (or less if death occurs within 24 hours) with the bare skin of albino rabbits weighing between 2 and 3 kilograms each.

3. A chemical that has a median lethal concentration (LC_{50}) in air of 200 parts per million by volume or less of gas or vapor, or 2 milligrams per liter or less of mist, fume or dust, when administered by continuous inhalation for one hour (or less if death occurs within one hour) to albino rats weighing between 200 and 300 grams each.

Mixtures of these materials with ordinary materials, such as water, may not warrant a classification of highly toxic. While this system is basically simple in application, any hazard evaluation which is required for the precise categorization of this type of material shall be performed by experienced, technically competent persons.

HORIZONTAL EXIT. See Section 1001.2.

HOTEL is any building containing six or more guest rooms intended or designed to be used, or which are used, rented or hired out to be occupied, or which are occupied for sleeping purposes by guests.

HOT–WATER–HEATING BOILER is a boiler having a volume exceeding 120 gallons (454.2 L), or a heat input exceeding 200,000 Btu/h (149 540 kW), or an operating temperature exceeding 210°F. (99°C.) that provides hot water to be used externally to itself.

HPM STORAGE ROOM is a room used for the storage or dispensing of hazardous production materials (HPM) and which is classified as a Group H, Division 2, 3 or 7 Occupancy.

VIAQ: HVAC means heating, ventilating and air conditioning.

Section 14. Section 211 of the 1994 Uniform Building Code is amended as follows:

SECTION 211 --J

JURISDICTION, as used in this code, is the City of Seattle. ((~~any political subdivision which adopts this code for administrative regulations within its sphere of authority.~~))

Section 15. Section 213 of the 1994 Uniform Building Code is amended as follows:

SECTION 213 -- L

LAND USE CODE is the Land Use Code, Title 23 of the Seattle Municipal Code, as amended.

LINTEL is a structural member placed over an opening or a recess in a wall and supporting construction above.

LIQUID is any material which has a fluidity greater than that of 300 penetration asphalt when tested in accordance with the *Uniform Fire Code Standards.* When not otherwise identified, the term "liquid" is both flammable and combustible liquids.

LIQUID STORAGE ROOM is a room classified as a Group H, Division 3 Occupancy used only for the storage of flammable or combustible liquids in a closed condition. The quantities of flammable or combustible liquids in storage shall not exceed the limits set forth in the Fire Code.

LIQUID STORAGE WAREHOUSE is a Group H, Division 3 Occupancy used only for the storage of flammable or combustible liquids in an unopened condition. The quantities of flammable or combustible liquids stored are not limited.

LISTED and LISTING are terms referring to equipment or materials included in a list published by an approved testing laboratory, inspection agency or other organization concerned with product evaluation that maintains periodic inspection of current productions of listed equipment or materials. The published list shall state

that the material or equipment complies with approved nationally recognized codes, standards or tests and has been tested or evaluated and found suitable for use in a specified manner.

LOADS. See Chapter 16.

LODGING HOUSE is any building or portion thereof containing not more than five guest rooms where rent is paid in money, goods, labor or otherwise.

LOW–PRESSURE HOT–WATER–HEATING BOILER is a boiler furnishing hot water at pressures not exceeding 160 psi (1102.4 kPa) and at temperatures not exceeding 250°F. (121°C.).

LOW–PRESSURE STEAM–HEATING BOILER is a boiler furnishing steam at pressures not exceeding 15 psi (103.4 kPa).

Section 16. Section 214 of the 1994 Uniform Building Code is amended as follows:

SECTION 214 --M

MARQUEE is a rigid structure projecting from and supported by a building. ((~~permanent roofed structure attached to and supported by the building and projecting over public property. Marquees are regulated in Chapter 32.~~))

MASONRY is that form of construction composed of stone, brick, concrete, gypsum, hollow–clay tile, concrete block or tile, glass block or other similar building units or materials or combination of these materials laid up unit by unit and set in mortar.

MASONRY, SOLID, is masonry of solid units built without hollow spaces.

Interpretation I214: MAY, as used in this code, is permissive for compliance.

MECHANICAL CODE is the *Uniform Mechanical Code* promulgated by the International Conference of Building Officials, as adopted by this jurisdiction.

MEMBRANE PENETRATION FIRE STOP is a material, device or construction installed to resist, for a prescribed time period, the passage of flame, heat and hot gases through openings in a protective membrane in order to accommodate cables, cable trays, conduit, tubing, pipes or similar items.

MEZZANINE or **MEZZANINE FLOOR** is an intermediate floor placed within a room.

MOTEL shall mean hotel as defined in this code.

MOTOR VEHICLE FUEL–DISPENSING STATION is that portion of a building where flammable or combustible liquids or gases used as motor fuels are stored and dispensed from fixed equipment into the fuel tanks of motor vehicles.

Section 17. Section 217 of the 1994 Uniform Building Code is amended as follows:

SECTION 217 -- P

PANIC HARDWARE. See Section 1001.2.

PEDESTRIAN WALKWAY is a walkway used exclusively as a pedestrian trafficway.

PENETRATION FIRE STOP is a through–penetration fire stop or a membrane–penetration fire stop.

PERMIT is an official document or certificate issued by the building official authorizing performance of a specified activity.

PERSON is a natural person, heirs, executors, administrators or assigns, and also includes a firm, partnership or corporation, its or their successors or assigns, or the agent of any of the aforesaid.

PHOTOLUMINESCENT is the property of emitting light as the result of absorption of visible or invisible light, which continues for a length of time after excitation.

PLASTIC MATERIALS, APPROVED, other than foam plastics regulated under Sections 601.5.5 and 2602, are those plastic materials having a self–ignition temperature of 650°F. (343 °C.) or greater as determined in accordance with U.B.C. Standard 26–6, and a smoke–density rating not greater than 450 when tested in accordance with U.B.C. Standard 8–1, in the way intended for use, or a smoke–density rating not greater than 75 when tested in accordance with U.B.C. Standard 26–5 in the thickness intended for use. Approved plastics shall be classified as either CC1 or CC2 in accordance with U.B.C. Standard 26–7. See also Section 207, definition of "foam plastic insulation."

PLATFORM. See Section 405.1.2.

PLUMBING CODE is the *Plumbing Code*, as adopted by this jurisdiction.

WSBC: PORTABLE SCHOOL CLASSROOM is a structure, transportable in one or more sections, which requires a chassis to be transported, and is designed to be used as an educational space with or without a permanent foundation. The structure shall be trailerable and capable of being demounted and relocated to other locations as needs arise.

PROJECT ARCHITECT OR ENGINEER is the licensed architect or engineer who has been commissioned as the prime consultant, having overall responsibility for the design and the coordination of the design work of other consultants and whose seal is on the contract documents.

PROTECTIVE MEMBRANE is a surface material which forms the required outer layer or layers of a fire–resistive assembly containing concealed spaces.

PUBLIC WAY. See Section 1001.2.

Section 18. Section 220 of the 1994 Uniform Building Code is amended as follows:

SECTION 220 --S

SELF–LUMINOUS means powered continuously by a self–contained power source other than a battery or batteries, such as radioactive tritium gas. A self–luminous sign is independent of external power supplies or other energy for its operation.

SENSITIZER is a chemical that causes a substantial proportion of exposed people or animals to develop an allergic reaction in normal tissue after repeated exposure to the chemical.

SERVICE CORRIDOR is a fully enclosed passage used for transporting hazardous production materials and for purposes other than required exiting.

SHAFT is an interior space, enclosed by walls or construction, extending through one or more stories or basements which connects openings in successive floors, or floors and roof, to accommodate elevators, dumbwaiters, mechanical equipment or similar devices or to transmit light or ventilation air.

SHAFT ENCLOSURE is the walls or construction forming the boundaries of a shaft.

SHALL, as used in this code, is mandatory.

SIGN. See Section 3205.

SMOKE DETECTOR is an approved, listed device that senses visible or invisible particles of combustion.

VIAQ: SOIL GAS RETARDER MEMBRANE is a flexible sheet material placed between the soil and the indoor air for the purpose of reducing the flow of soil gas into the building.

STAGE. See Chapter 4.

STORY is that portion of a building included between the upper surface of any floor and the upper surface of the floor next above, except that the topmost story shall be that portion of a building included between the upper surface of the topmost floor and the ceiling or roof above. If the finished floor level directly above a ~~usable~~ basement or unused under–floor space is more than 6 feet (1829 mm) above grade as defined herein for more than 50 percent of the total perimeter or is more than 12 feet (3658 mm) above grade ((~~as defined herein at any point,~~)) for more than 25 feet (7620 mm) of the perimeter plus required driveways up to 22 feet (6706 mm) such ~~usable~~ basement or unused under–floor space shall be considered as a story; provided, however, that there is a 10-foot (3048 mm) minimum width between the driveway and any portion of the 25-foot (7620 mm) exemption. See Figure 2-1.

STORY, BASEMENT-LIKE is a story which, because of topography, has exterior walls that are covered or partially covered by earth, where the building official determines that egress and emergency access are restricted and which is subject to special restrictions for occupancy, egress and sprinkler systems that apply to basements.

((~~STORY, FIRST, is the lowest story in a building which qualifies as a story, as defined herein, except that a floor level in a building having only one floor level shall be classified as a first story, provided such floor level is not more than 4 feet (1219 mm) below grade, as defined herein, for more than 50 percent of the total perimeter, or not more than 8 feet (2438 mm) below grade, as defined herein, at any point.~~))

STREET is any thoroughfare or public way ((~~not less than~~)) more than 16 feet (4877 mm) in width which has been dedicated or deeded to the public for public use.

STRUCTURAL ENGINEER OF RECORD is the engineer who has been commissioned to design the primary structure of the building. The structural documents prepared by, or under the supervision of, this Engineer must contain his/her seal and are the structural contract documents used for the construction permit application.

STRUCTURAL OBSERVATION means the visual observation of the structural system, for general conformance to the approved plans and specifications ((~~, at significant construction stages and at completion of the structural system~~)). Structural observation does not include or waive the responsibility for the inspections required by Sections 108, 1701 or other sections of this code.

STRUCTURALLY QUALIFIED PRODUCTS are products that have been pre-qualified by current acceptance and certification by an accepted authority such as International Conference of Building Officials (ICBO), American Society for Testing and Materials (ASTM), American Concrete Institute (ACI), American Institute of Steel Construction (AISC), or others widely accepted in the engineering field.

STRUCTURE is that which is built or constructed, an edifice or building of any kind, or any piece of work artificially built up or composed of parts joined together in some definite manner.

SURGICAL AREA is the preoperating, operating, recovery and similar rooms within an outpatient health–care center where the patients are incapable of unassisted self-preservation.

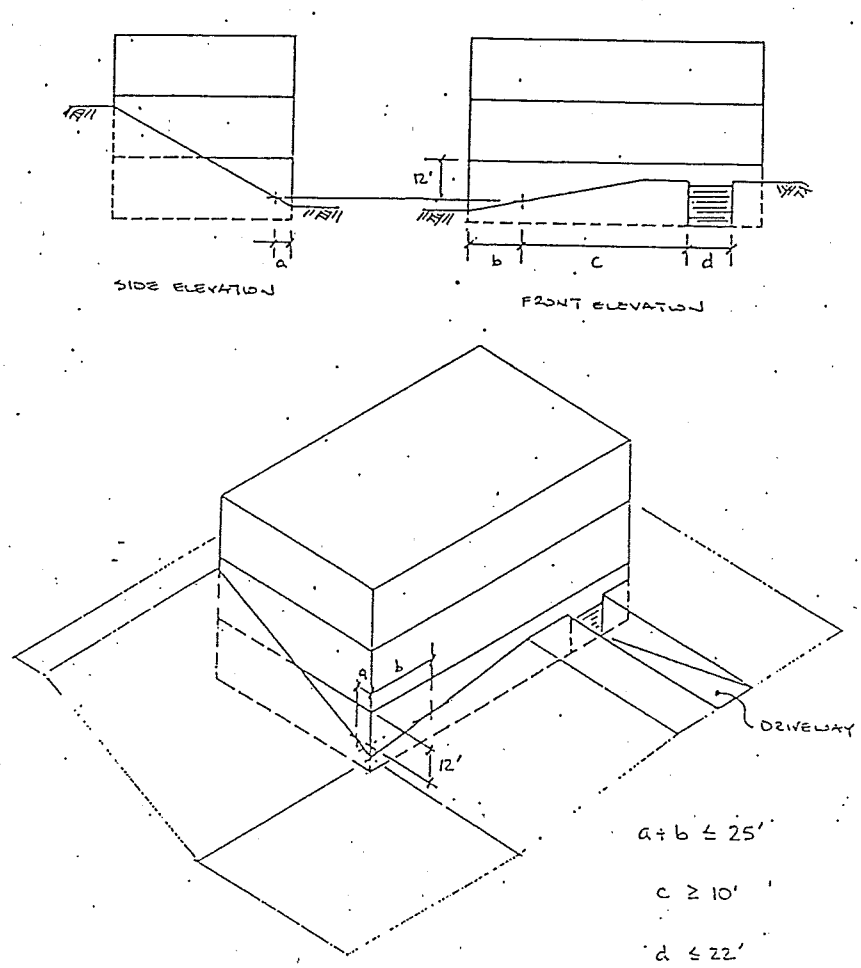

FIGURE 2-1

Figure 2-1 is a Seattle amendment to the Uniform Building Code.

Section 19. Section 222 of the 1994 Uniform Building Code is amended as follows:

SECTION 222 --U

U.B.C. STANDARDS are those standards published in Volume 3 of the *Uniform Building Code* promulgated by the International Conference of Building Officials, as adopted by this jurisdiction. (See Chapter 35.)

UL is the Underwriters Laboratories Inc., 333 Pfingsten Road, Northbrook, Illinois 60062.

USE with reference to flammable or combustible liquids is the placing in action or service of flammable or combustible liquids whereby flammable vapors may be liberated to the atmosphere.

USE with reference to hazardous materials other than flammable or combustible liquids is the placing in action or making available for service by opening or connecting any container utilized for confinement of material whether a solid, liquid or gas.

Interpretation I222: USE where otherwise mentioned in this code is equivalent to character of occupancy and not intended to be construed as the definition of USE in the Zoning or Land Use Codes.

USE, CLOSED SYSTEM, is use of a solid or liquid hazardous material in a closed vessel or system that remains closed during normal operations where vapors emitted by the product are not liberated outside of the vessel or system and the product is not exposed to the atmosphere during normal operations; and all uses of compressed gases. Examples of closed systems for solids and liquids include product conveyed through a piping system into a closed vessel, system or piece of equipment; and reaction process operations.

USE, OPEN SYSTEM, is use of a solid or liquid hazardous material in a vessel or system that is continuously open to the atmosphere during normal operations and where vapors are liberated, or the product is exposed to the atmosphere during normal operations. Examples of open systems for solids and liquids include dispensing from or into open breakers or containers, dip tank and plating tank operations.

Section 20. Section 223 of the 1994 Uniform Building Code is amended as follows:

SECTION 223 --V

VALUE or VALUATION of a building shall be the estimated cost to replace the building and structure in kind, based on current replacement costs, as determined in ((~~Section 107.2~~)) the Permit Fee Ordinance.

VENEER. See Section 1403.2.

VIAQ: VENTILATION EFFECTIVENESS is the fraction of the outdoor air delivered to the space that reaches the occupied zone.

VIAQ: VIRGIN POLYETHYLENE is extruded polyethylene sheets made from nonreprocessed resins.

Section 21. Section 224 of the 1994 Uniform Building Code is amended as follows:

SECTION 224 --W

WALLS shall be defined as follows:

Bearing Wall is any wall meeting either of the following classifications:

(a) Any metal or wood stud wall which supports more than 100 pounds per lineal foot (0.0445 kN per lineal meter) of superimposed load.

(b) Any masonry or concrete wall which supports more than 200 pounds per lineal foot (0.089 kN per lineal meter) superimposed load, or any such wall supporting its own weight for more than one story.

Exterior Wall is any wall or element of a wall, or any member or group of members, which defines the exterior boundaries or courts of a building and which has a slope of 60 degrees or greater with the horizontal plane.

Faced Wall is a wall in which the masonry facing and backing are so bonded as to exert a common action under load.

Nonbearing Wall is any wall that is not a bearing wall.

Parapet Wall is that part of any wall entirely above the roof line.

Retaining Wall is a wall designed to resist the lateral displacement of soil or other materials.

WATER HEATER is an appliance designed primarily to supply hot water and is equipped with automatic controls limiting water temperature to a maximum of 210°F. (192°C.)

Interpretation I224: "Water Heater" includes only those appliances which do not exceed pressure of 160 pounds per square inch, volume of 120 gallons and a heat input of 200,000 Btu/hr.

WEATHER–EXPOSED SURFACES are all surfaces of walls, ceilings, floors, roofs, soffits and similar surfaces exposed to the weather, excepting the following:

1. Ceilings and roof soffits enclosed by walls or by beams which extend a minimum of 12 inches (305 mm) below such ceiling or roof soffits.

2. Walls or portions of walls within an unenclosed roof area, when located a horizontal distance from an exterior opening equal to twice the height of the opening.

3. Ceiling and roof soffits beyond a horizontal distance of 10 feet (3048 mm) from the outer edge of the ceiling or roof soffits.

WINDOW WELL is a soil–retaining structure at a window having a sill height lower than the adjacent ground elevation.

Section . Section 227 of the 1994 Uniform Building Code is amended as follows:

SECTION 227 --Z

((~~No definitions.~~))

ZONING CODE is the Seattle Zoning Code, Title 24, Seattle Municipal Code, as amended.

Section 22. Section 302.1 of the 1994 Uniform Building Code is amended as follows:

302.1 General. When a building is used for more than one occupancy purpose, each part of the building comprising a distinct "occupancy," as described in Section 301 shall be separated from any other occupancy as specified in Section 302.4.

EXCEPTIONS: 1. When an approved spray booth constructed in accordance with the Fire Code is installed, such booth need not be separated from Group B, F, H, ((M)) or S Occupancies.

2. The following occupancies need not be separated from the uses to which they are accessory:

2.1. Assembly rooms having a floor area of not over 750 square feet (69 m^2).

2.2. Administrative and clerical offices and similar rooms which do not exceed 25 percent of the floor area of the major use when not related to Group H, Division 2 and Group H, Division 3 Occupancies.

2.3. Gift shops, administrative offices and similar rooms in Group R, Division 1 Occupancies not exceeding 10 percent of the floor area of the major use.

2.4. The kitchen serving the dining area of which it is a part.

Interpretation 1302.1: Paragraph 2.4 waives the separation between a kitchen and dining area when they are adjacent and when the kitchen serves the dining area.

2.5. Customer waiting rooms not exceeding 450 square feet (41.8 m2) when not related to Group H Occupancies and when such waiting rooms have an exit directly to the exterior.

2.6. Business, office or similar uses occurring within a dwelling unit, conducted primarily by the occupants of the dwelling, and which are secondary to the use of the unit for dwelling purposes.

3. An occupancy separation need not be provided between a Group R, Division 3 Occupancy and a carport having no enclosed uses above, provided the carport is entirely open on two or more sides.

4. A Group S, Division 3 Occupancy used exclusively for the parking or storage of private or pleasure-type motor vehicles need not be separated from a Group S, Division 4 Occupancy open parking garage as defined in Section 311.1.

When a building houses more than one occupancy, each portion of the building shall conform to the requirements for the occupancy housed therein.

An occupancy shall not be located above the story or height set forth in Table 5–B, except as provided in Section 506. When a mixed occupancy building contains a Group H, Division 6 Occupancy, the portion containing the Group H, Division 6 Occupancy shall not exceed three stories or 55 feet in height.

Section 23. Section 302.3 of the 1994 Uniform Building Code is amended as follows:

302.3 Types of Occupancy Separations. Occupancy separations shall be classed as "four–hour fire–resistive," "three–hour fire–resistive," "two–hour fire–resistive," and "one–hour fire–resistive."

1. A four–hour fire–resistive occupancy separation shall have no openings therein and shall not be of less than four–hour fire–resistive construction.

2. A three–hour fire–resistive occupancy separation shall not be of less than three–hour fire–resistive construction. All openings in walls forming such separation shall be protected by a fire assembly having a three–hour fire–protection rating. The total width of all openings in any three–hour fire–resistive occupancy separation wall in any one story shall not exceed 25 percent of the length of the wall in that story and no single opening shall have an area greater than 120 square feet (11 m^2).

All openings in floors forming a three–hour fire–resistive occupancy separation shall be protected by vertical shaft, stairway, ramp or escalator enclosures extending above and below such openings. The walls of such vertical enclosures shall be of not less than two–hour fire–resistive construction and all openings therein shall be protected by a fire assembly having a one– and one–half–hour fire–protection rating.

EXCEPTION: When the walls of such vertical enclosure extending below the three–hour fire–resistive occupancy separation to the foundation are provided with a fire–resistive rating of not less than three hours with openings therein protected as required for walls forming three–hour occupancy separations, the enclosure walls extending above such floor used as the three–hour fire–resistive occupancy separation may have a one–hour fire–resistive rating provided:

1. The occupancy above is not required to be of Type I or Type II fire–resistive construction, and

2. The enclosure walls do not enclose an exit stairway, a ramp or an escalator required to have enclosure walls of not less than two–hour fire–resistive construction.

Code Alternate CA302.3: Stair and elevator doors in the three-hour enclosure walls may be one and one-half hour fire assemblies if they open into vestibules which are separated from the remainder of the floor by walls of not less than one-hour fire-resistive construction. Openings in vestibule walls shall be protected by a tightfitting smoke and draft control assembly conforming to Section 1005.8.

3. A two–hour fire–resistive occupancy separation shall not be of less than two–hour fire–resistive construction. All openings in such separation shall be protected by a fire assembly having a one– and one–half–hour fire–protection rating.

4. A one–hour fire–resistive occupancy separation shall not be of less than one–hour fire–resistive construction. All openings in such separation shall be protected by a fire assembly having a one–hour fire–protection rating.

Section 24. Section 302.4 of the 1994 Uniform Building Code is amended as follows:

302.4 Fire Ratings for Occupancy Separations. Occupancy separations shall be provided between the various groups and divisions of occupancies as set forth in Table 3–B. For required separation of specific uses in Group I, Division 1 hospitals and nursing homes, see Table 3–C. See also Section 504.6.1.

EXCEPTIONS: 1. A three–hour occupancy separation may be used between a Group A, Division 1 and a Group S, Division 3 Occupancy used exclusively for the parking or storage of private or pleasure–type motor vehicles provided no repair or fueling is done. A two–hour occupancy separation may be used between a Group A, Division 2, 2.1, 3 or 4 or E or I Occupancy and a Group S, Division 3 Occupancy used exclusively for the parking or storage of private or pleasure–type motor vehicles provided no repair or fueling is done.

2. Unless required by Section 311.2.2, the three–hour occupancy separation between a Group R, Division 1 Occupancy and a Group S, Division 3 Occupancy used only for the parking or storage of private or pleasure–type motor vehicles with no repair or fueling may be reduced to two hours. Such occupancy separation may be further reduced to one hour where the area of such Group S, Division 3 Occupancy does not exceed 3,000 square feet (279 m^2).

Code Alternate CA302.4a: For an area exceeding 3,000 square feet and not exceeding 10,000 square feet, a one-hour occupancy separation is permitted provided such garage is equipped with an approved automatic sprinkler system.

3. In the one–hour occupancy separation between Group R, Division 3 and Group U Occupancies, the separation may be limited to the installation of ((~~materials approved for one–hour fire–resistive construction~~)) 1/2-inch gypsum wallboard on the garage side and a self–closing, tight–fitting solid–wood door 1-3/8 inches (35 mm) in thickness, or a self–closing, tight–fitting door having a fire–protection rating of not less than 20 minutes when tested in accordance with Part II of U.B.C. Standard 7–2, which is a part of this code, is permitted in lieu of a one–hour fire assembly. Fire dampers need not be installed in air ducts passing through the wall, floor or ceiling separating a Group R, Division 3 Occupancy from a Group U Occupancy, provided such ducts within the Group U Occupancy are constructed of steel having a thickness not less than 0.019 inch (0.48 mm) (No. 26 galvanized sheet gage) and have no openings into the Group U Occupancy.

4. Group H, Division 2 and Group H, Division 3 Occupancies need not be separated from Group H, Division 7 Occupancies when such occupancies also comply with the requirements for a Group H, Division 7 Occupancy.

Interpretation I302.4: Construction requirements of Section 307 for storage and mixing rooms apply.

Code Alternate CA302.4b: No occupancy separation is required between Group A, Division 2.1 and Groups B or M occupancies when both are protected by an automatic sprinkler system.

Code Alternate CA302.4c: Subject to the approval of the building official, opening protection in occupancy separation walls may be waived between Group S, Division 3 or Division 4 parking areas and enclosed portions of buildings such as entry lobbies and similar areas provided:

A. The floors of the enclosed building, where the opening protection is waived, are protected by an automatic sprinkler system;

B. The openings are glazed with either tempered or laminated glazing materials;

C. When required by the building official, the glazing is protected on the parking side with a sprinkler system designed to wet the entire glazed surface; and

D. The Group S, Division 3 or Division 4 occupancy is used primarily for passenger loading and unloading and vehicle drive-through uses.

Section 25. Section 303.3 of the 1994 Uniform Building Code is amended as follows:

303.3 Location on Property. Buildings housing Group A Occupancies shall front directly on or have access to a public street not less than 20 feet (6096 mm) in width. The access to the public street shall be a minimum 20–foot–wide (6096 mm) right–of–way, unobstructed and maintained only as access to the public street. The main entrance to the building shall be located on a public street or on the access way.

Buildings housing Group A Occupancies shall have a paved yard or street not less than 40 feet (12,192 mm) in width extending along the side of the building on which the main exit is located as approved by the building official.

Exception: Group A Occupancies having an occupant load of less than 300.

For fire–resistive protection of exterior walls and openings, as determined by location on property, see Section 503 and Chapter 6.

Section 26. Section 303.9 of the 1994 Uniform Building Code is amended as follows:

303.9 Fire Detection and Alarm Systems. An approved fire alarm system shall be installed as set forth in the Fire Code in Group A, Divisions 1, 2 and 2.1 Occupancies. Fire detection and alarm systems shall be provided and installed as required by Article 10 of the Fire Code. See also Section 1105.4.9 for requirements for visual alarms.

For amusement building alarm systems see Section 408.5.1.

Section 27. Section 304.2 of the 1994 Uniform Building Code is amended as follows:

304.2 Construction, Height and Allowable Area.

304.2.1 General. Buildings or parts of buildings classed as Group B Occupancies because of the use or character of the occupancy shall be limited to the types of construction set forth in Table 5–B. Such occupancies shall not exceed, in area or height, the limits specified in Sections 504, 505 and 506 and shall comply with the provisions of this section.

304.2.2 Special provisions.

304.2.2.1 Laboratories and vocational shops. Laboratories or groups of laboratories under the same management and vocational shops ((~~in buildings used for educational purposes,~~)) and similar areas containing hazardous materials, shall be separated from each other and other portions of the building by not less than a one–hour fire–resistive occupancy separation. Laboratories or groups of laboratories need not be separated from accessory support areas such as offices. When the quantities of hazardous materials in such uses do not exceed those listed in Table 3–D or 3–E, the requirements of Sections 307.5 and 307.8 shall apply. When the quantities of hazardous materials in such uses exceed those listed in Table 3–D or 3–E, the use shall be classified as the appropriate Group H Occupancy.

For the application and use of control areas, see Footnote 1 of Tables 3-D and 3-E.

((~~Occupants in 1~~)) Laboratories having an ((~~area in excess of 200 square feet (18.6 m^2)~~)) occupant load in excess of 10 shall have ((~~access to~~)) at least two exits from the room and all portions of the room shall be within 75 feet (22 860 mm) of an exit.

304.2.2.2 Amusement buildings. Amusement buildings with an occupant load of less than 50 shall comply with Section 408.

Section 28. Section 304.7 of the 1994 Uniform Building Code is amended as follows:

304.7 Fire Detection, Alarm, Sprinkler and Standpipe Systems. Fire detection and alarm systems shall be provided and installed as required by Article 10 of the Fire Code. When required by Section 904.2.1 or other provisions of this code, automatic sprinkler systems and standpipes shall be installed as specified in Chapter 9. See also Section 1105.4.9 for requirements for visual alarms.

Section 29. Section 304.8 of the 1994 Uniform Building Code is amended as follows:

304.8 Special Hazards. Chimneys and heating apparatus shall conform to the requirements of Chapter 31 of this code and the Mechanical Code.

Storage and use of flammable and combustible liquids shall be in accordance with NFPA Standard No. 31 and the Fire Code.

Devices generating a glow, spark or flame capable of igniting flammable vapors shall be installed such that sources of ignition are at least 18 inches (457 mm) above the floor of any room in which Class I flammable liquids or flammable gases are used or stored. See also Section 308.2 of the Mechanical Code.

Section 30. Section 305.1 of the 1994 Uniform Building Code is amended as follows:

305.1 Group E Occupancies Defined. Group E Occupancies shall be:

Division 1. Any building used for educational purposes through the 12th grade by 50 or more persons for more than 12 hours per week or four hours in any one day.

Division 2. Any building used for educational purposes through the 12th grade by less than 50 persons for more than 12 hours per week or four hours in any one day.

Division 3. ((~~Any building or portion thereof used for day-care purposes for more than six persons.~~)) Day care centers, preschools, and day treatment centers.

EXCEPTION: Family child day-care homes shall be considered Group R, Division 3 occupancies.

For occupancy separations, see Table 3–B.

Section 31. Section 305.2 of the 1994 Uniform Building Code is amended as follows:

305.2 Construction, Height and Allowable Area.

305.2.1 General. Buildings or parts of buildings classed in Group E because of the use or character of the occupancy shall be limited to the types of construction set forth in Table 5–B and shall not exceed, in area or height, the limits specified in Sections 504, 505 and 506, except that the area may be increased by 50 percent when the maximum travel distance specified in Section 1003.4 is reduced by 50 percent.

305.2.2 Atmospheric separation requirements.

305.2.2.1 Definitions. For the purpose of this chapter and Section 1017, the following definitions are applicable:

COMMON ATMOSPHERE. A common atmosphere exists between rooms, spaces or areas within a building which are not separated by an approved smoke– and draft–stop barrier.

SEPARATE ATMOSPHERE. A separate atmosphere exists between rooms, spaces or areas that are separated by an approved smoke barrier.

SMOKE BARRIER. A smoke barrier consists of walls, partitions, floors and openings therein as will prevent the transmission of smoke or gases through the construction. See Section 905.

305.2.2.2 General provisions. The provisions of this section apply when a separate exit system is required in accordance with Section 1017.

Walls, partitions and floors forming all or part of an atmospheric separation shall be as required by Section 905.2.3. Glass lights of approved wired glass set in steel frames may be installed in such walls or partitions.

All automatic–closing fire assemblies installed in the atmospheric separation shall be activated by approved smoke detectors.

The specific requirements of this section are not intended to prevent the design or use of other systems, equipment or techniques which will effectively prevent the products of combustion from breaching the atmospheric separation.

305.2.3 Special provisions. Rooms in Divisions 1 and 2 Occupancies used for kindergarten, first– or second–grade pupils, and Division 3 Occupancies shall not be located above or below the first story.

EXCEPTIONS: 1. Basements or stories having floor levels located within 4 feet (1219 mm), measured vertically, from adjacent ground level at the point of exit, provided the basement or story has exits directly to the exterior at that level.

2. In buildings equipped with an automatic sprinkler system throughout, rooms used for kindergarten, first– and second–grade children or for day–care purposes may be located on the second story, provided there are at least two exits directly ((~~to the exterior for the exclusive use of such occupants~~)) into separate exit systems as defined in Section 1017.

3. Division 3 Occupancies may be located above the first story in buildings of Type I construction and in Types II–F.R., II One–hour and III One–hour construction, subject to the limitation of Section 506 when:

3.1 Division 3 Occupancies ((~~with children under the age of seven or~~)) containing more than 12 children per story shall not be located above the fourth floor; and

3.2 The entire story in which the day–care facility is located is equipped with an approved manual fire alarm and smoke–detection system. (See the Fire Code.) Actuation of an initiating device shall sound an audible alarm throughout the entire story. When a building fire alarm system is required by other provisions of this code or the Fire Code, the alarm system shall be connected to the building alarm system.

An approved alarm signal shall sound at an approved location in the day–care occupancy to indicate a fire alarm or sprinkler flow condition in other portions of the building; and

3.3 The day–care facility, if more than 1,000 square feet (92.9 m^2) in area, is divided into at least two compartments of approximately the same size by a smoke barrier with door openings protected by smoke– and draft–control assemblies having a fire–protection rating of not less than 20 minutes. Smoke barriers shall have a fire–resistive rating of not less than one hour. In addition to the requirements of Section 302, occupancy separations between Division 3 Occupancies and other occupancies shall be constructed as smoke barriers. Door openings in the smoke barrier shall be tight fitting with gaskets installed as required by Section 1005, and shall be automatic closing by actuation of the automatic sprinklers, fire alarm or smoke–detection system. Openings for ducts and other heating, ventilating and air–conditioning openings shall be equipped with a minimum Class I, 250°F. (121°C.) smoke damper as defined and tested in accordance with approved recognized standards. See Chapter 35, Part III. The damper shall close upon detection of smoke by an approved smoke detector located within the duct, or upon the activation of the fire alarm system; and

3.4 Each compartment formed by the smoke barrier has not less than two exits, one of which is permitted to pass through the adjoining compartment; and

3.5 At least one exit from the Division 3 Occupancy shall be into a separate exiting system as defined in Section 1017; and

3.6 The building is equipped with an automatic sprinkler system throughout.

Stages and platforms shall be constructed in accordance with Chapter 4. For attic space partitions and draft stops, see Section 708.

305.2.4 Special hazards. Laboratories, vocational shops and similar areas containing hazardous materials shall be separated from each other and from other portions of the building by not less than a one–hour fire–resistive occupancy separation. When the quantities of hazardous materials in such uses do not exceed those listed in Table 3–D or 3–E, the requirements of Sections 307.5.2 and 307.8 shall apply. When the quantities of hazardous materials in such uses exceed those listed in Table 3–D or 3–E, the use shall be classified as the appropriate Group H Occupancy.

See Section 1017.7 for exiting from laboratories in Group E Occupancies.

Equipment in rooms or groups of rooms sharing a common atmosphere where flammable liquids, combustible dust or hazardous materials are used, stored, developed or handled shall conform to the requirements of the Fire Code.

Section 32. Section 305.3 of the 1994 Uniform Building Code is amended as follows:

305.3 Location on Property. All buildings housing Group E Occupancies shall front directly on or have access to a public street not less than 20 feet (6096 mm) in width. The access to the public street shall be a minimum 20–foot–wide (6096 mm) right–of–way, unobstructed and maintained only as access to the public street. At least one required exit shall be located on the public street or on the access way.

Buildings housing Group E Occupancies shall have a paved yard or street not less than 40 feet (12,192 mm) in width extending along the side of the building on which the main exit is located as approved by the building official.

Exception: For Group E, Divisions 2 and 3 occupancies, the yard or street may be 20 feet in width.

For fire–resistive protection of exterior walls and openings, as determined by location on property, see Section 503 and Chapter 6.

Exception: Group E, Divisions 2 and 3 Occupancies in buildings of Types II One-hour, II-N or V construction having an occupant load of not more than 20, may have exterior wall and opening protection as required for Group R, Division 3 Occupancies.

Section 33. Section 305.9 of the 1994 Uniform Building Code is amended as follows:

305.9 Fire Alarm Systems. An approved fire alarm system shall be provided for Group E Occupancies with an occupant load of 50 or more persons. In Group E Occupancies provided with an automatic sprinkler or detection system, the operation of such system shall automatically activate the school fire alarm system, which shall include an alarm mounted on the exterior of the building. Fire detection and fire alarm systems shall also be provided and installed as specified in Article 10 of the Fire Code. See also Section 1105.4.9 for requirements for visual alarms.

See Chapter 10 for smoke–detection requirements.

For installation requirements, see the Fire Code.

Section 34. Section 306.1 of the 1994 Uniform Building Code is amended as follows:

306.1 Group F Occupancies Defined. Group F Occupancies shall include the use of a building or structure, or a portion thereof, for assembling, disassembling, fabricating, finishing, manufacturing, packaging, repair or processing operations that are not classified as Group H Occupancies.

Interpretation I306.1a: Where amounts of hazardous materials less than specified in Tables 3-D and 3-E are present, the occupancy will not be classified as a Group H occupancy. For the application and use of control areas, see Footnote 1 of Tables 3-D and 3-E.

Factory and industrial occupancies shall include the following:

Division 1. Moderate–hazard factory and industrial occupancies shall include factory and industrial uses which are not classified as Group F, Division 2 Occupancies, but are not limited to facilities producing the following:

1. Aircraft.

2. Appliances.

3. Athletic equipment.

4. Automobiles and other motor vehicles.

5. Bakeries.

6. Alcoholic beverages.

7. Bicycles.

8. Boats.

9. Brooms and brushes.

10. Business machines.

11. Canvas or similar fabric.

12. Cameras and photo equipment.

13. Carpets and rugs, including cleaning.

14. Clothing.

15. Construction and agricultural machinery.

16. Dry cleaning and dyeing.

17. Electronics assembly.

18. Engines, including rebuilding.

19. Photographic film.

20. Food processing.

21. Furniture.

22. Hemp products.

23. Jute products.

24. Laundries.

25. Leather products.

26. Machinery.

27. Metal.

28. Motion pictures and television filming and videotaping.

29. Musical instruments.

30. Optical goods.

31. Paper mills or products.

32. Plastic products.

33. Printing or publishing.

34. Recreational vehicles.

35. Refuse incineration.

36. Shoes.

37. Soaps and detergents.

38. Tobacco.

39. Trailers.

40. Wood, distillation.

41. Millwork (sash and door).

42. Woodworking, cabinet.

Interpretation I306.1b: Group F, Division 1 includes facilities producing and repairing boats and ships of all types. If hazardous materials are present in excess of exempt amounts, Section 307 shall apply. Painting and use of synthetic materials may require compliance with Section 307.

Division 2. Low-hazard factory and industrial occupancies shall include facilities producing noncombustible or nonexplosive materials which, during finishing, packing or processing, do not involve a significant fire hazard, including, but not limited to, the following:

1. Nonalcoholic beverages.

2. Brick and masonry.

3. Ceramic products.

4. Foundries.

5. Glass products.

6. Gypsum.

7. Ice.

8. Steel products—fabrication and assembly.

For occupancy separations, see Table 3-B.

Section 35. Section 306.7 of the 1994 Uniform Building Code is amended as follows:

306.7 Fire Detection, Alarm, Sprinkler and Standpipe Systems. When required by Section 904.2 or other provisions of this code, automatic sprinkler systems and standpipes shall be installed as specified in Chapter 9. Fire detection and fire alarm systems shall also be provided and installed as required in Article 10 of the Fire Code. See also Section 1105.4.9 for requirements for visual alarms.

Section 36. Section 306.8 of the 1994 Uniform Building Code is amended as follows:

306.8 Special Hazards. For special hazards of Group F Occupancies, see Section 304.8.

Storage and use of flammable and combustible liquids shall be in accordance with NFPA Standard No. 31 and the Fire Code.

Buildings erected or converted to house high-piled combustible stock or aerosols shall comply with the Fire Code.

Equipment, machinery or appliances which generate finely divided combustible waste or which use finely divided combustible material shall be equipped with an approved method of collection and removal. An automatic sprinkler system shall be installed in woodworking occupancies over 2,500 square feet (232.3 m^2) in area containing such operations.

Section 37. Section 307.1 of the 1994 Uniform Building Code is amended as follows:

307.1 Group H Occupancies Defined.

307.1.1 General. Group H Occupancies shall include buildings or structures, or portions thereof, that involve the manufacturing, processing, generation or storage of materials that constitute a high fire, explosion or health hazard. For definitions, identification and control of hazardous materials and pesticides, and the display of nonflammable solid and nonflammable and noncombustible liquid hazardous materials in Group B, F, M or S Occupancies, see the Fire Code. For the application and use of control areas, see Footnote 1 of Tables 3-D and 3-E. Group H Occupancies shall be:

Division 1. Occupancies with a quantity of material in the building in excess of those listed in Table 3-D which present a high explosion hazard, including, but not limited to:

1. Explosives, blasting agents, fireworks and black powder.

   EXCEPTION: Storage and the use of pyrotechnic special effect materials in motion picture, television, theatrical and group entertainment production when under permit as required in the Fire Code. The time period for storage shall not exceed 90 days.

2. Unclassified detonatable organic peroxides.

3. Class 4 oxidizers.

4. Class 4 or Class 3 detonatable unstable (reactive) materials.

Division 2. Occupancies where combustible dust is manufactured, used or generated in such a manner that concentrations and conditions create a fire or explosion potential; occupancies with a quantity of material in the building in excess of those listed in Table 3-D, which present a moderate explosion hazard or a hazard from accelerated burning, including, but not limited to:

1. Class I organic peroxides.

2. Class 3 nondetonatable unstable (reactive) materials.

3. Pyrophoric gases.

4. Flammable or oxidizing gases.

5. Class I, II or III-A flammable or combustible liquids which are used or stored in normally open containers or systems, or in closed containers or systems pressurized at more than 15-pounds-per-square-inch (103.4 kPa) gage.

   EXCEPTION: Aerosols.

6. Class 3 oxidizers.

7. Class 3 water–reactive materials.

Division 3. Occupancies where flammable solids, other than combustible dust, are manufactured, used or generated.

Division 3 Occupancies also include uses in which the quantity of material in the building in excess of those listed in Table 3–D presents a high physical hazard, including, but not limited to:

1. Class II, III or IV organic peroxides.

2. Class 1 or 2 oxidizers.

3. Class I, II or III–A flammable or combustible liquids which are used or stored in normally closed containers or systems and containers or systems pressurized at 15–pounds–per–square–inch gage or less, and aerosols.

4. Class III–B combustible liquids.

5. Pyrophoric liquids or solids.

6. Class 1 or 2 water–reactive materials.

7. Flammable solids in storage.

8. Flammable or oxidizing cryogenic fluids (other than inert).

9. Class 1 unstable (reactive) gas or Class 2 unstable (reactive) materials.

Division 4. Repair garages and body shops not classified as Group S, Division 3 Occupancies.

Division 5. Aircraft repair hangars not classified as Group S, Division 5 Occupancies and heliports.

Division 6. Semiconductor fabrication facilities and comparable research and development areas in which hazardous production materials (HPM) are used and the aggregate quantity of materials are in excess of those listed in Table 3–D or 3–E. Such facilities and areas shall be designed and constructed in accordance with Section 411.

Division 7. Occupancies having quantities of materials in excess of those listed in Table 3–E that are health hazards, including:

1. Corrosives.

2. Toxic and highly toxic materials.

((~~3. Irritants.~~

~~4. Sensitizers.~~

~~5. Other health hazards.~~))

307.1.2 Multiple hazards. When a hazardous material has multiple hazards, all hazards shall be addressed and controlled in accordance with the provisions of this chapter.

307.1.3 Liquid use, dispensing and mixing rooms. Rooms in which Class I, Class II and Class III–A flammable or combustible liquids are used, dispensed or mixed in open containers shall be constructed in accordance with the requirements for a Group H, Division 2 Occupancy and the following:

1. Rooms in excess of 500 square feet (46.5 m^2) shall have at least one exterior door approved for fire department access.

2. Rooms shall be separated from other areas by an occupancy separation having a fire–resistive rating of not less than one hour for rooms up to 150 square feet (13.9 m^2) in area and not less than two hours where the room is more than 150 square feet (13.9 m^2) in area. Separations from other occupancies shall not be less than required by Section 302 and Table 3–B.

3. Shelving, racks and wainscoting in such areas shall be of noncombustible construction or wood not less than 1–inch (25 mm) nominal thickness.

4. Liquid use, dispensing and mixing rooms shall not be located in basements.

307.1.4 Liquid storage rooms. Rooms in which Class I, Class II and Class III–A flammable or combustible liquids are stored in closed containers shall be constructed in accordance with the requirements for a Group H, Division 3 Occupancy and to the following:

1. Rooms in excess of 500 square feet (46.5 m^2) shall have at least one exterior door approved for fire department access.

2. Rooms shall be separated from other areas by an occupancy separation having a fire–resistive rating of not less than one hour for rooms up to 150 square feet (13.9 m^2) in area and not less than two hours where the room is more than 150 square feet (13.9 m^2) in area. Separations from other occupancies shall not be less than required by Section 302 and Table 3–B.

3. Shelving, racks and wainscoting in such areas shall be of noncombustible construction or wood of not less than 1–inch (25 mm) nominal thickness.

4. Rooms used for the storage of Class I flammable liquids shall not be located in a basement.

307.1.5 Flammable or combustible liquid storage warehouses. Liquid storage warehouses in which Class I, Class II and Class III–A flammable or combustible liquids are stored in closed containers shall be constructed in accordance with the requirements for a Group H, Division 3 Occupancy and the following:

1. Liquid storage warehouses shall be separated from all other uses by a four–hour area separation wall.

2. Shelving, racks and wainscoting in such warehouses shall be of noncombustible construction or wood not less than 1–inch (25 mm) nominal thickness.

3. Rooms used for the storage of Class I flammable liquids shall not be located in a basement.

307.1.6 Requirement for report. The building official may require a technical opinion and report to identify and develop methods of protection from the hazards presented by the hazardous material. The opinion and report shall be prepared by a qualified person, firm or corporation approved by the building official and shall be provided without charge to the enforcing agency.

The opinion and report may include, but is not limited to, the preparation of a hazardous material management plan (HMMP); chemical analysis; recommendations for methods of isolation, separation, containment or protection of hazardous materials or processes, including appropriate engineering controls to be applied; the extent of changes in the hazardous behavior to be anticipated under conditions of exposure to fire or from hazard control procedures; and the limitations or conditions of use necessary to achieve and maintain control of the hazardous materials or operations. The report shall be entered into the files of the code enforcement agencies. Proprietary and trade secret information shall be protected under the laws of the state or jurisdiction having authority.

307.1.7. Pre-design Conference. Prior to application for permit for a Division 6 Occupancy, the applicant shall arrange a pre-design conference with the design team, the building official and fire chief to review proposed emergency life safety systems for the building and the appropriate protection of the life safety systems. For Division 7 occupancies, a pre-design conference is recommended (See also Table No. 5-B). It is the purpose of the meeting to obtain conceptual approval from the building official and the fire chief of the proposed systems and to allow for design based upon the latest state-of-the-art.

Applicants shall bring to the conference preliminary building plans and a draft of the Hazardous Materials Management Plan. The building official and fire chief may require sufficient documentation, based upon appropriate analyses, that the proposal meets the intent of nationally recognized good practices. The building permit shall not be issued until the building official and fire chief have approved, in writing, the emergency life

safety systems for the building and the appropriate protection of the life safety systems. The documentation of the pre-design meeting shall be reflected on the plans for the building and become a permanent part of the Department of Construction and Land Use's records.

Section 38. Section 307.2 of the 1994 Uniform Building Code is amended as follows:

307.2 Construction, Height and Allowable Area.

307.2.1 General. Buildings or parts of buildings classed in Group H because of the use or character of the occupancy shall be limited to the types of construction set forth in Table 5–B and shall not exceed, in area or height, the limits specified in Sections 504, 505 and 506. For restrictions on H Group Occupancies in the Downtown Fire District, see Section 511.

307.2.2 Floors. Except for surfacing, floors in areas containing hazardous materials and in areas where motor vehicles, boats, helicopters or airplanes are stored, repaired or operated shall be of noncombustible, liquid–tight construction.

EXCEPTION: In Group H, Divisions 4 and 5 Occupancies, floors may be surfaced or waterproofed with asphaltic paving materials in that portion of the facility where no repair work is done.

307.2.3 Spill control. When required by the Fire Code, floors shall be recessed a minimum of 4 inches (102 mm) or shall be provided with a liquid–tight raised sill with a minimum height of 4 inches (102 mm) so as to prevent the flow of liquids to adjoining areas. Except for surfacing, the sill shall be constructed of noncombustible material, and the liquid–tight seal shall be compatible with the material being stored. When liquid–tight sills are provided, they may be omitted at door openings by the installation of an open–grate trench which connects to an approved drainage system.

307.2.4 Drainage. When required by the Fire Code, the room, building or area shall be provided with a drainage system to direct the flow of liquids to an approved location or, the room, building or area shall be designed to provide secondary containment for the hazardous materials and fire–protection water.

Drains from the area shall be sized to carry the sprinkler system design flow rate over the sprinkler system design area. The slope of drains shall not be less than 1 percent. Materials of construction for the drainage system shall be compatible with the stored materials.

Incompatible materials shall be separated from each other in the drain systems. They may be combined when they have been rendered acceptable for discharge by an approved means into the public sewer. Drainage of spillage and fire–protection water directed to a neutralizer or treatment system shall comply with the following:

1. The system shall be designed to handle the maximum worst–case spill from the single largest container plus the volume of fire–protection water from the system over the minimum design area for a period of 20 minutes.

2. Overflow from the neutralizer or treatment system shall be provided to direct liquid leakage and fire–protection water to a safe location away from the building, any material or fire–protection control valve, means of egress, adjoining property, or fire department access roadway.

307.2.5 Containment. When required by the Fire Code, drains shall be directed to a containment system or other location designed as secondary containment for the hazardous material liquids and fire–protection water, or the building, room or area shall be designed to provide secondary containment of hazardous material liquids and fire–protection water through the use of recessed floors or liquid–tight raised sills.

Secondary containment shall be designed to retain the spill from the largest single container plus the design flow rate of the sprinkler system for the area of the room or area in which the storage is located or the sprinkler system design area, whichever is smaller. The containment capacity shall be capable of containing the flow for a period of 20 minutes.

Overflow from the secondary containment system shall be provided to direct liquid leakage and fire–protection water to a safe location away from the building, any material or fire–protection control valve, means of egress, fire access roadway, adjoining property or storm drains.

If the storage area is open to rainfall, the secondary containment shall be designed to accommodate the volume of a 24–hour rainfall as determined by a 25–year storm.

When secondary containment is required, a monitoring method capable of detecting hazardous material leakage from the primary containment into the secondary containment shall be provided. When visual inspection of the primary containment is not practical, other approved means of monitoring may be provided. When secondary containment may be subject to the intrusion of water, a monitoring method for such water shall be provided. Whenever monitoring devices are provided, they shall be connected to distinct visual or audible alarms.

307.2.6 Smoke and heat vents. Smoke and heat venting shall be provided in areas containing hazardous materials as set forth in the Fire Code in addition to the provisions of this code.

307.2.7. Standby Power. Standby power shall be provided in Group H, Division 1, ((~~and~~)) 2, and 3 Occupancies and in Group H, Division ((~~3~~)) 7 Occupancies in which ((~~Class I or II organic peroxides are stored.~~)) there is use or storage of corrosives, highly toxic solids and liquids. The standby power system shall be designed and installed in accordance with Article 701-11 (a), (b), (c) or (f) of the Electrical Code to automatically supply power to all required electrical equipment when the normal electrical supply system is interrupted.

307.2.8. Emergency Power. An emergency power system shall be provided in Group H, Division((~~s~~)) 6 ((~~and 7~~)) Occupancies and in Group H, Division 7 Occupancies in which highly toxic or toxic gases are stored or used. The emergency power system shall be designed and installed in accordance with the Electrical Code to automatically supply power to all required electrical equipment when the normal electrical supply system is interrupted.

((~~The exhaust system may be designed to operate at not less than one half the normal fan speed on the emergency power system when it is demonstrated that the level of exhaust will maintain a safe atmosphere.~~))

Interpretation I307.2: The standby and emergency power systems required by Sections 307.2.7 and 307.2.8 shall be provided for required mechanical exhaust ventilation, treatment, temperature control, liquid-level limit control, pressure control, alarm, and detection or other required electrically-operated systems. For required systems, see the Fire Code.

The systems shall be designed and installed in accordance with Article 700-12 (a), (b), (c) or (f) of the Electrical Code, or, if the building official approves at the predesign conference, they may be designed and installed in accordance with Article 700-12 (d),(e) of the Electrical Code.

307.2.9 Special provisions for Group H, Division 1 Occupancies. Group H, Division 1 Occupancies shall be in buildings used for no other purpose, without basements, crawl spaces or other under–floor spaces. Roofs shall be of lightweight construction with suitable thermal insulation to prevent sensitive material from reaching its decomposition temperature.

Group H, Division 1 Occupancies containing materials which are in themselves both physical and health hazards in quantities exceeding the exempt amounts in Table 3–E shall comply with requirements for both Group H, Division 1 and Group H, Division 7 Occupancies.

307.2.10 Special provisions for Group H, Divisions 2 and 3 Occupancies. Group H, Divisions 2 and 3 Occupancies containing quantities of hazardous materials in excess of those set forth in Table 3–G shall be in buildings used for no other purpose, shall not exceed one story in height and shall be without basements, crawl spaces or other under–floor spaces.

Group H, Divisions 2 and 3 Occupancies containing water–reactive materials shall be resistant to water penetration. Piping for conveying liquids shall not be over or through areas containing water reactives, unless isolated by approved liquid–tight construction.

EXCEPTION: Fire–protection piping may be installed over reactives without isolation.

307.2.11 Special provisions for Group H, Division 4 Occupancies. A Division 4 Occupancy having a floor area not exceeding 2,500 square feet (232 m^2) may have exterior walls of not less than two–hour fire–resistive construction when less than 5 feet (1524 mm) from a property line and of not less than one–hour fire–resistive construction when 5 feet (1524 mm) or more but less than ((~~20~~)) 16 feet (((~~6096~~)) 4877 mm) from a property line.

307.2.12 Special provisions for Group H, Division 6 Occupancies. See Section 307.11.

Section 39. Section 307.9 of the 1994 Uniform Building Code is amended as follows:

307.9 Fire Alarm Systems. An approved manual fire alarm system shall be provided in Group H Occupancies used for the manufacturing of organic coatings. Approved automatic fire detection, fire alarm, smoke detection shall be provided for rooms used for the storage, dispensing, use and handling of hazardous materials when required by the Fire Code. See also Section 1105.4.9 for requirements for visual alarms.

For Group H, Division 6 Occupancies, see Section 307.11.

For installation requirements, see the Fire Code.

For aerosol storage warehouses, see the Fire Code.

Section 40. Section 308.1 of the 1994 Uniform Building Code is amended as follows:

308.1 Group I Occupancies Defined. Group I Occupancies shall be:

Division 1.1. Nurseries for the full–time care of children under the age of six (each accommodating more than five children).

Hospitals, ((~~sanitariums,~~)) psychiatric hospitals, nursing homes with nonambulatory or mobile nonambulatory patients and similar buildings (((~~each accommodating more than five patients~~))).

Division 1.2. Health–care centers for ambulatory patients receiving outpatient medical care which may render the patient incapable of unassisted self–preservation (each tenant space accommodating more than five such patients).

Division 2. Nursing homes for ambulatory patients((~~, homes for children six years of age or over (each accommodating more than five patients or children)~~))).

Division 3. ((~~Mental~~)) Psychiatric hospitals, ((~~mental sanitariums,~~)) jails, prisons, reformatories and buildings where personal liberties of inmates or patients are similarly restrained.

For occupancy separations, see Table 3–B.

EXCEPTIONS: 1. Group I Occupancies shall not include buildings used only for private residential purposes for a family group.

2. One-story nursing homes accommodating 15 or fewer ambulatory or mobile ambulatory developmentally disabled persons shall be classified as a Group R, Division 1 Occupancy.

Section 41. Section 308.3 of the 1994 Uniform Building Code is amended as follows:

308.3 Location on Property. For fire–resistive protection of exterior walls and openings, as determined by location on property, see Section 503 and Chapter 6.

All buildings housing Group I Occupancies shall front directly upon, or have access to, a public street not less than 20 feet in width. The access to the public street shall be a minimum 20 foot wide right-of-way. Such access right-of-way shall be unobstructed and maintained only as access to the public street. At least one required exit shall be located on the public street or on the access way.

Buildings housing Group I Occupancies shall have a paved yard or street not less than 40 feet (12,192 mm) in width extending along the side of the building on which the main exit is located as approved by the building official.

EXCEPTION: For Group I, Divisions 1,2 and 2 Occupancies the yard or street may be 20 feet (6096 mm) in width.

Section 42. Section 308.9 of the 1994 Uniform Building Code is amended as follows:

308.9 Fire Detection and Alarm Systems. An approved manual and automatic fire alarm system shall be provided for Group I Occupancies. Audible alarm devices shall be used in nonpatient areas. Visible alarm devices may be used in lieu of audible devices in patient–occupied areas. For installation requirements, see Article 10 of the Fire Code. Fire detection and fire alarm systems shall also be provided and installed as specified in Article 10 of the Fire Code. See also Section 1105.4.9 for requirements for visual alarms.

Section 43. Section 309.7 of the 1994 Uniform Building Code is amended as follows:

309.7 Fire Detection, Alarm, Sprinkler and Standpipe Systems. When required by other provisions of this code, automatic sprinkler systems and standpipes shall be installed as specified in Chapter 9. Fire detection and fire alarm systems shall also be provided and installed as specified in Article 10 of the Fire Code. See also Section 1105.4.9 for requirements for visual alarms.

Section 44. Section 309.8 of the 1994 Uniform Building Code is amended as follows:

309.8 Special Hazards. For special hazards of Group M Occupancies, see Section 304.8.

Storage and use of flammable and combustible liquids shall be in accordance with NFPA Standard 31 and the Fire Code.

Buildings erected or converted to house high–piled combustible stock or aerosols shall comply with the Fire Code.

Section 45. Section 310.1 of the 1994 Uniform Building Code is amended as follows:

310.1 Group R Occupancies Defined. Group R Occupancies shall be:

Division 1. Hotels and apartment houses.

Congregate residences (each accommodating more than 10 persons).

Division 2. Not used.

Division 3. ((~~Dwellings and 1~~)) Lodging houses and detached one- and two-family dwellings.

Family child day care homes.

Congregate residences (each accommodating 10 persons or less).

Interpretation I310.1: For the purposes of this code, one or two dwelling units located in a mixed occupancy building shall be regulated the same as apartment houses except where the only other occupancy is Group U.

Living quarters for a building's watchkeeper or caretaker occupied by not more than 2 adults shall be considered Group R, Division 3 Occupancies.

WSBC: Foster family care homes licensed by the Washington State Department of Social and Health Services shall be permitted, as an accessory use to a Group R, Division 3 dwelling unit, for six or fewer children including those of the resident family.

For occupancy separations, see Table 3–B.

((~~A complete code for construction of detached one- and two-family dwellings is in Appendix Chapter 3, Division III, of this code. When adopted, as set forth in Section 101.3, it will take precedence over the other requirements set forth in Chapter 35 of this code.~~))

Section 46. Section 310.2 of the 1994 Uniform Building Code is amended as follows:

310.2 Construction, Height and Allowable Area.

310.2.1 General. Buildings or parts of buildings classed in Group R because of the use or character of the occupancy shall be limited to the types of construction set forth in Table 5–B and shall not exceed, in area or height, the limits specified in Sections 504, 505 and 506.

For radon resistive construction standards and formaldehyde reduction requirements, see Chapter 12.

310.2.2 Special provisions. Walls and floors separating individual dwelling units in the same building, separating individual guest rooms in hotels and walls separating dwelling units and guest rooms from corridors, or guest rooms in Group R, Division 1 hotel occupancies, shall not be of less than one–hour fire–resistive construction. Roof-ceiling soffits shall be provided with a minimum of 1/2-inch gypsum wallboard in buildings of Types II-N, III-N and V-N construction.

Group R, Division 1 Occupancies more than two stories in height or having more than 3,000 square feet (279 m^2) of floor area above the first story shall not be of less than one–hour fire–resistive construction throughout except as provided in Section 601.5.2.2.

Storage or laundry rooms that are within Group R, Division 1 Occupancies that are used in common by tenants shall be separated from the rest of the building by not less than one–hour fire–resistive occupancy separation. Individual storage lockers shall be separated from each other with one-hour fire-resistive construction, and openings in the separation shall have one-hour protection.

EXCEPTION: The separation between individual storage lockers may be non-rated in rooms 500 square feet (46 m^2) or less in area and in sprinklered rooms of any size.

For automatic sprinkler system requirements for storage rooms in basements and basement-like stories, see Section 904.2.2.

For Group R, Division 1 Occupancies with a Group S, Division 3 parking garage in the basement or first story, see Section 311.2.2.

For attic space partitions and draft stops, see Section 708.

Section 47. Section 310.4 of the 1994 Uniform Building Code is amended as follows:

310.4 Access and Exit Facilities and Emergency Escapes. Exits shall be provided as specified in Chapter 10. (See also Section 1013 for exit markings.)

EXCEPTION: Only one exit door from a family child day care home need comply with the requirements of Section 1004.2.

Access to, and egress from, buildings required to be accessible shall be provided as specified in Chapter 11 of the Washington State Building Code.

Basements in dwelling units and every sleeping room below the fourth story shall have at least one operable window or door approved for emergency escape or rescue which shall open directly into a public street, public alley, yard or exit court. The emergency door or window shall be operable from the inside to provide a full, clear opening without the use of separate tools.

EXCEPTION: The window or door may open into an atrium complying with Section 402 provided the window or door opens onto an exit balcony and the dwelling unit or guest room has an exit which does not open into the atrium.

Escape or rescue windows shall have a minimum net clear openable area of 5.7 square feet (0.53 m^2). The minimum net clear openable height dimension shall be 24 inches (610 mm). The minimum net clear openable width dimension shall be 20 inches (508 mm). When windows are provided as a means of escape or rescue, they shall have a finished sill height not more than 44 inches (1118 mm) above the floor.

Escape and rescue windows with a finished sill height below the adjacent ground elevation shall have a window well. Window wells at escape or rescue windows shall comply with the following:

1. The clear horizontal dimensions shall allow the window to be fully opened and provide a minimum accessible net clear opening of 9 square feet (0.84 m^2), with a minimum dimension of 36 inches (914 mm).

2. Window wells with a vertical depth of more than 44 inches (1118 mm) shall be equipped with an approved permanently affixed ladder or stairs that are accessible with the window in the fully open position. The ladder or stairs shall not encroach into the required dimensions of the window well by more than 6 inches (152 mm).

Bars, grilles, grates or similar devices may be installed on emergency escape or rescue windows, doors or window wells, provided:

1. The devices are equipped with approved release mechanisms which are openable from the inside without the use of a key or special knowledge or effort; and

2. The building is equipped with smoke detectors installed in accordance with Section 310.9.

Section 48. Section 310.5 of the 1994 Uniform Building Code is amended as follows:

310.5 Light, Ventilation and Sanitation. Light and ventilation shall be as specified in Chapter 12. The number of plumbing fixtures shall not be less than specified in Section 2902.6.

In no dwelling unit or congregate residence shall the only access from a bedroom to a bathroom be through another bedroom. No water closet shall be housed in any room or space used for the preparation of food nor shall a water closet compartment open directly, without a door, into any such room or space.

Kitchens shall be provided with a kitchen sink, hot and cold running water, counter work space, cabinets for storage of cooking utensils and dishes, and stove and refrigerator or adequate space for the installation of the stove and refrigerator. Splash backs and counter tops shall have impervious surfaces.

Section 49. Section 310.6 of the 1994 Uniform Building Code is amended as follows:

310.6 Room Dimensions.

310.6.1 Ceiling heights. Habitable space shall have a ceiling height of not less than 7 feet 6 inches (2286 mm) except as otherwise permitted in this section. Kitchens, halls, bathrooms and toilet compartments may have a ceiling height of not less than 7 feet (2134 mm) measured to the lowest projection from the ceiling. Where exposed beam ceiling members are spaced at less than 48 inches (1219 mm) on center, ceiling height shall be measured to the bottom of these members. Where exposed beam ceiling members are spaced at 48 inches (1219 mm) or more on center, ceiling height shall be measured to the bottom of the deck supported by these members, provided that the bottom of the members is not less than 7 feet (2134 mm) above the floor.

If any room in a building has a sloping ceiling, the prescribed ceiling height for the room is required in only one half the area thereof. No portion of the room measuring less than 5 feet (1524 mm) from the finished floor to the finished ceiling shall be included in any computation of the minimum area thereof.

If any room has a furred ceiling, the prescribed ceiling height is required in two thirds the area thereof, but in no case shall the height of the furred ceiling be less than 7 feet (2134 mm).

310.6.2 Floor area. Dwelling units and congregate residences shall have at least one common room which shall have not less than 120 square feet (11.2 m^2) of floor area. Every room which is used for both cooking and living or both living and sleeping quarters shall have a floor area of not less than 130 square feet (12 m^2) if used or intended to be used by only one occupant, or of not less than 150 square feet (14 m^2) if used or intended to be used by more than one occupant. Where more than two persons occupy a room used for sleeping purposes, the required floor area shall be increased at the rate of 50 square feet (4.6 m^2) for each occupant in excess of two. In a dormitory, minimum floor area shall be 60 square feet (5.5 m^2) per single or double bunk and aisles not less than 3 feet (914 mm) in width shall be provided between the sides of bunks and from every bunk to an exit. Other habitable rooms except kitchens shall have an area of not less than 70 square feet (6.5 m^2). Efficiency dwelling units shall comply with the requirements of Section 310.7.

310.6.3 Width. Habitable rooms other than a kitchen shall not be less than 7 feet (2134 mm) in any dimension.

Section 50. Section 310.7 of the 1994 Uniform Building Code is amended as follows:

310.7 Efficiency Dwelling Units. An efficiency dwelling unit shall conform to the requirements of the code except as herein provided:

1. The unit shall have a living room of not less than 220 square feet (20.4 m^2) of superficial floor area. An additional 100 square feet (9.3 m^2) of superficial floor area shall be provided for each occupant of such unit in excess of two.

Interpretation I310.7: The required square footage may not include built-in equipment which extends from floor to ceiling such as wardrobes, cabinets, kitchen units or fixtures.

2. The unit shall be provided with a separate closet.

3. The unit shall be provided with a kitchen sink, cooking appliance and refrigeration facilities, each having a clear working space of not less than 30 inches (762 mm) in front. Light and ventilation conforming to this code shall be provided.

4. The unit shall be provided with a separate bathroom containing a water closet, lavatory and bathtub or shower.

Section 51. Section 310.9 of the 1994 Uniform Building Code is amended as follows:

310.9 Smoke Detectors and Sprinkler Systems.

310.9.1 Smoke detectors.

310.9.1.1 General. Dwelling units, congregate residences and hotel or lodging house guest rooms that are used for sleeping purposes shall be provided with smoke detectors. Detectors shall be installed in accordance with the approved manufacturer's instructions.

310.9.1.2 Additions, alterations or repairs to Group R Occupancies. When the valuation of an addition, alteration or repair to a Group R Occupancy exceeds ((~~$1,000~~)) $2,500 and a permit is required, or when one or more sleeping rooms are added or created in existing Group R Occupancies, smoke detectors shall be installed in accordance with Sections 310.9.1.3, 310.9.1.4 and 310.9.1.5 of this section.

EXCEPTION: Repairs to the exterior surfaces of a Group R Occupancy are exempt from the requirements of this section.

310.9.1.3 Power source. In new construction, required smoke detectors shall receive their primary power from the building wiring when such wiring is served from a commercial source and shall be equipped with a battery backup. The detector shall emit a signal when the batteries are low. Wiring shall be permanent and without a disconnecting switch other than those required for overcurrent protection. Smoke detectors may be solely battery operated when installed in existing buildings; or in buildings without commercial power; or in buildings which undergo alterations, repairs or additions regulated by Section 310.9.1.2.

310.9.1.4 Location within dwelling units and congregate residences. In dwelling units and congregate residences, a detector shall be installed in each sleeping room and at a point centrally located in the corridor or area giving access to each separate sleeping area. When the dwelling unit or congregate residence has more than one story and in dwellings or congregate residences with basements, a detector shall be installed on each story and in the basement. In dwelling units and congregate residences where a story or basement is split into two or more levels, the smoke detector shall be installed on the upper level, except that when the lower level contains a sleeping area, a detector shall be installed on each level. When sleeping rooms are on an upper level, the detector shall be placed at the ceiling of the upper level in close proximity to the stairway. In dwelling units and congregate residences where the ceiling height of a room open to the hallway serving the bedrooms exceeds that of the hallway by 24 inches (610 mm) or more, smoke detectors shall be installed in the hallway and in the adjacent room. Detectors shall sound an alarm audible in all sleeping areas of the dwelling unit or congregate residence in which they are located.

310.9.1.5 Location in efficiency dwelling units((~~, congregate residences~~)) and hotels. In efficiency dwelling units, hotel suites and in hotel ((~~and congregate residence~~)) sleeping rooms, detectors shall be located on the ceiling or wall of the main room or ((each)) hotel sleeping room. When sleeping rooms within an efficiency dwelling unit or hotel suite are on an upper level, the detector shall be placed at the ceiling of the upper level in close proximity to the stairway. When actuated, the detector shall sound an alarm audible within the sleeping area of the dwelling unit ((~~or congregate residence~~)), hotel suite, or sleeping room in which it is located.

310.9.1.6 Location within family child day care homes. In family child day care homes, operable detectors shall be located in all sleeping and napping areas. When the family child day care home has more than one story, and in family child day care homes with basements, an operable detector shall be installed on each story and in the basement. In family child day care homes where a story or basement is split into two or more levels, the smoke detector shall be installed in the upper level, except that when the lower level contains a sleeping or napping area, an operable detector shall be located on each level. When sleeping rooms are on an upper level, the detector shall be placed at the ceiling of the upper level in close proximity to the stairway. In family child day care homes where the ceiling height of a room open to the hallway serving the bedrooms exceeds that of the hallway by 24 inches or more, smoke detectors shall be installed in the hallway and the adjacent room. Detectors shall sound an alarm audible in all areas of the building.

310.9.2 Sprinkler and standpipe systems. When required by Section 904.2.1 or other provisions of this code, automatic sprinkler systems and standpipes shall be designed and installed as specified in Chapter 9.

Section 52. Section 310.10 of the 1994 Uniform Building Code is amended as follows:

310.10 Fire Alarm Systems. Group R, Division 1 Occupancies shall be provided with an approved manual and automatic fire alarm system in apartment houses three or more stories in height or containing 16 or more dwelling units, in hotels three or more stories in height or containing 20 or more guest rooms and in congregate residences three or more stories in height or having an occupant load of 20 or more. A fire alarm and communication system

shall be provided in Group R, Division 1 Occupancies located in a high–rise building. Fire detection and fire alarm systems shall also be provided and installed as specified in Article 10 of the Fire Code. See also Section 1105.4.9 for requirements for visual alarms.

EXCEPTIONS: 1. A manual fire alarm system need not be provided in buildings ((~~not over~~)) two stories or less in height when all individual dwelling units and contiguous attic and crawl spaces are separated from each other and public or common areas by at least one–hour fire–resistive occupancy separations and each individual dwelling unit or guest room has an exit directly to a public way, exit court or yard.

Code alternate CA310.10: A fire alarm system need not be installed in buildings of 3 stories or less, where units are separated as above, where each unit has exits direct to the public way which are not shared by another unit and where no unit is located above another unit.

2. A separate fire alarm system need not be provided in buildings which are protected throughout by an approved supervised fire sprinkler system having a local alarm to notify all occupants.

The local alarm shall provide an alarm signal with a sound pressure level of 15 dBA above the average ambient sound level in every occupied space within the building. The minimum sound pressure level shall be 70 dBA. The maximum sound pressure level for audible alarm–indicating appliances shall not exceed 110 dBA at the minimum hearing distance from the audible appliance.

For the purposes of this section, area separation walls shall not define separate buildings.

Section 53. Section 310.11 of the 1994 Uniform Building Code is amended as follows:

310.11 Heating. Dwelling units, guest rooms and congregate residences shall be provided with heating facilities capable of maintaining an average room temperature of 70°F. (21°C.) at a point 3 feet (914 mm) above the floor in all habitable rooms, baths and toilet rooms when the outside temperature is 24° F. See also the Seattle Energy Code and the Seattle Mechanical Code for further requirements concerning heating systems.

Section 54. The 1994 Uniform Building Code is amended by adding Section 310.13 as follows:

310.13 Family Child Day Care Homes. For family child day care homes with more than six children, each floor level used for family child day care purposes shall be served by two remote exits. Outside exit doors shall be operable from the inside without the use of keys or any special knowledge or effort.

Basements with exit discharge located more than four feet (1219 mm) below grade level shall not be used for family child day care homes unless one of the following conditions exist:

1. Exit stairways from the basement open directly to exterior of the building without entering the first floor; or

2. One of the two required exits discharges directly to the exterior from the basement level, and a self-closing door is installed at the top or bottom of the interior stair leading to the floor above; or

3. One operable window or door, approved for emergency escape or rescue, that opens directly to a public street, public alley, yard or exit court is provided; or

4. A residential sprinkler system is provided in accordance with National Fire Protection Association Standard 13D.

Floors with exit discharge located more than four feet (1219 mm) above grade level shall not be occupied by children in family child day care homes.

EXCEPTIONS: 1. Use of toilet facilities while under supervision of an adult staff person.

2. Family child day care homes may be allowed on the second story if one of the following conditions exists:

2.1 Exit stairways from the second story open directly to the exterior of the building without entering the first floor; or

2.2 One of the two required exits discharges directly to the exterior from the second story level, and a self- closing door is installed at the top or bottom of the interior stair leading to the floor below; or

2.3 A residential sprinkler system is provided throughout the entire building in accordance with National Fire Protection Association Standard 13D.

Every sleeping or napping room in a family child day care home shall have at least one operable window for emergency rescue.

EXCEPTION: Sleeping or napping rooms having doors leading to two separate exit ways, or a door leading directly to the exterior of the building.

Rooms or spaces containing a commercial-type cooking kitchen, boiler, maintenance shop, janitor closet, laundry, woodworking shop, flammable or combustible storage, or painting operation shall be separated from the family child day care area by at least one-hour fire-resistive construction.

EXCEPTION: A fire-resistive separation shall not be required where the food preparation kitchen contains only a domestic cooking range, and the preparation of food does not result in the production of smoke or grease ladened vapors.

For restrictions on the installation of warm-air furnaces in bedrooms, bathrooms or closets, see Section 315 of the Mechanical Code.

Section 55. The 1994 Uniform Building Code is amended by adding Section 310.14 as follows:

310.14 Security from Criminal Activity

310.14.1 Group R Occupancies other than Detached One- Family Dwellings.

310.14.1.1. General. This section applies to all housing units except detached one-family dwellings.

310.14.1.2. Definition. For the purposes of this section, **HOUSING UNIT** is any dwelling unit, guest room or congregate residence.

310.14.1.3. Building entrance doors and locks. Building entrance doors shall be without openings and shall be as capable of resisting forcible entry as a flush solid core wood door 1-3/8 inches thick.

EXCEPTIONS: 1. Building entrance doors may have visitor-observation ports which do not impair the fire resistance of the door.

2. Main entrance doors may be framed or unframed non-shattering glass, framed 1/4-inch plate glass or other security glazing.

3. Building entrance doors other than main entrance doors may have glazed openings. Glazed openings shall have wire or grilles to prevent operation of the door latch from outside by hand or instrument.

Building entrance doors shall be self-closing, self-locking and equipped with a dead-locking latch bolt with at least a 1/2-inch throw which shall penetrate the striker at least 1/4 inch.

EXCEPTIONS: 1. Building entrance doors that open directly into a housing unit shall comply with Section 310.14.1.5 below.

2. Garage-to-building doors need not be self-locking when the garage-to-exterior door is equipped with an electrically-operated remote control device for opening and automatically closing.

3. When either the garage-to-exterior doors or garage-to-building doors are equipped for self-closing and self-locking, the other need not be so equipped.

310.14.1.4. Locks. All exit doors, including those from individual housing units, shall be openable from the interior without use of keys or special knowledge or effort.

310.14.1.5. Housing unit doors and locks. Doors from interior corridors to individual housing units shall not have glass openings and shall be as capable of resisting forcible entry as a flush solid core wood door 1-3/8 inches thick.

Every entrance door to a housing unit shall have a dead bolt or dead-locking latch bolt with at least a 1/2-inch throw which penetrates the striker not less than 1/4 inch. In hotels and other multi-unit buildings that provide housing for rent on a daily or weekly basis, every entrance door to a housing unit shall also be provided with a chain door guard or barrel bolt on the inside.

310.14.1.6. Observation ports. Every entrance door to a housing unit, other than transparent doors, shall have a visitor-observation port. The port shall not impair the fire resistance of the door. Observation ports shall be installed not less than 54 inches and not more than 66 inches above the floor.

310.14.1.7. Non-exit doors. Doors to storage, maintenance and building service rooms shall be self-closing and self-locking.

310.14.1.8. Sliding doors. Dead bolts or other approved locking devices shall be provided on all sliding doors. These locks shall be installed so that the mounting screws for the lock cases are inaccessible from the outside.

310.14.1.9. Windows. Openable windows shall have operable inside latching devices.

EXCEPTION: Windows whose sills are located 10 feet or more above grade, or 10 feet or more above a deck, balcony or porch that is not readily accessible from grade except through a housing unit need not have operable inside latching devices.

310.14.1.10. Alternate security devices. Subject to the approval of the building official, alternate security devices may be substituted for those required by this section if they have equal capability to resist illegal entry. The installation of the device must not conflict with other requirements of this code and other ordinances regulating the safety of exiting.

310.14.2 Detached One-Family Dwellings.

310.14.2.1. Building entrance locks. Building entrance doors, including garage doors, shall be capable of locking. They shall be equipped with a dead-locking latch bolt with at least a 1/2-inch throw which penetrates the striker not less than 1/4 inch. Building entrance doors shall be openable from the inside without use of a key or special knowledge or effort.

EXCEPTION: Garage-to-exterior doors may be equipped with an electronically-operated remote control device for opening and closing in lieu of a dead-locking latch bolt. When garage-to-exterior doors are equipped with remote control devices, garage-to-building doors need not be capable of locking.

310.14.2.2. Observation Ports. Every building entrance door, other than garage doors, shall have a visitor observation port or glass side light. Observation ports shall be installed at a height of not less than 54 inches and not more than 66 inches from the floor.

310.14.2.3. Windows and Sliding Doors. Dead bolts or other approved locking devices shall be provided on all sliding doors and openable windows. The lock shall be installed so that the mounting screws for the lock case are inaccessible from the outside.

EXCEPTION: Windows whose sills are located 10 feet or more above grade, or 10 feet or more above a deck, balcony or porch that is not readily accessible from grade except through a housing unit need not have operable inside latching devices.

310.14.2.4. Alternate security devices. Subject to the approval of the building official, alternate security devices may be substituted for those required by this section. Alternate devices must have equal capability to resist illegal entry. The installation of the device must not conflict with other requirements of this code and other ordinances regulating the safety of exiting.

Section 56. Section 311.1 of the 1994 Uniform Building Code is amended as follows:

311.1 Group S Occupancies Defined. Group S Occupancies shall include the use of a building or structure, or a portion thereof, for storage not classified as a hazardous occupancy. Storage occupancies shall include the following:

Division 1. Moderate hazard storage occupancies shall include buildings or portions of buildings used for storage of combustible materials that are not classified as a Group S, Division 2 or as a Group H Occupancy.

Interpretation I311.1: Liquor warehouses are classified as Group S, Division 1 Occupancies.

Division 2. Low-hazard storage occupancies shall include buildings, structures, or portions thereof, used for storage of noncombustible materials, such as products on wood pallets or in paper cartons with or without single-thickness divisions, or in paper wrappings and shall include ice plants, power plants and pumping plants. Such

products may have a negligible amount of plastic trim such as knobs, handles or film wrapping. Low–hazard storage occupancies shall include, but are not limited to, storage of the following items:

1. Beer or wine (in metal, glass or ceramic containers).
2. Cement in bags.
3. Cold storage and creameries.
4. Dairy products in nonwax–coated paper containers.
5. Dry–cell batteries.
6. Dryers.
7. Dry pesticides in a building not classed as a Group H Occupancy.
8. Electrical coils.
9. Electrical insulators.
10. Electrical motors.
11. Empty cans.
12. Foods in noncombustible containers.
13. Fresh fruits in nonplastic trays or containers.
14. Frozen foods.
15. Glass bottles (empty or filled with nonflammable liquids).
16. Gypsum board.
17. Inert pigments.
18. Meats.
19. Metal cabinets.
20. Metal furniture.
21. Oil–filled distribution transformers.
22. Stoves.
23. Washers.

Division 3. Division 3 Occupancies shall include repair garages where work is limited to exchange of parts and maintenance requiring no open flame or welding, motor vehicle fuel–dispensing stations, and parking garages not classed as Group S, Division 4 open parking garages or Group U private garages.

For the use of flammable and combustible liquids, see Section 307 and the Fire Code.

Division 4. Open parking garages per Section 311.9.

Boat moorage.

Division 5. Aircraft hangars where work is limited to exchange of parts and maintenance requiring no open flame or welding and helistops.

For occupancy separations, see Table 3–B.

Section 57. Section 311.2 of the 1994 Uniform Building Code is amended as follows:

311.2 Construction, Height and Allowable Area.

311.2.1 General. Buildings or parts of buildings classed in Group S Occupancy because of the use or character of the occupancy shall be limited to the types of construction set forth in Table 5–B and shall not exceed, in area or height, the limits specified in Sections 504, 505 and 506.

311.2.2 Special provisions.

311.2.2.1 Group S, Division 3 with Group A, Division 3; Group B; Group M or R, Division 1 Occupancy above. Other provisions of this code notwithstanding, a basement or first story of a building may be considered as a separate and distinct building for the purpose of area limitations, limitation of number of stories and type of construction, when all of the following conditions are met:

1. The basement or first story is of Type I construction and is separated from the building above with a three–hour occupancy separation. See Section 302.3.

2. The building above the three–hour occupancy separation contains only Group A, Division 3; Group B; or Group M or R, Division 1 Occupancies.

3. The building below the three–hour occupancy separation is a Group R, Division 1 Occupancy or a Group S, Division 3 Occupancy used exclusively for the parking and storage of private or pleasure–type motor vehicles.

EXCEPTIONS: 1. Entry lobbies, mechanical rooms and similar uses incidental to the operation of the building.
2. Group A, Division 3 and Group B office, drinking and dining establishments and Group M retail occupancies in addition to those uses incidental to the operation of the building (including storage areas), provided that the entire structure below the three–hour occupancy separation is protected throughout by an automatic sprinkler system.

4. The maximum building height in feet shall not exceed the limits set forth in Table 5–B for the least type of construction involved.

Code Alternate CA311.2a: When the upper building is of Type V-One hour construction, the height may be measured from the finish floor of the floor-ceiling assembly directly above the first story of the Type I-F.R. building, provided the building, above and below the separation, is protected throughout by an automatic sprinkler system designed to U.B.C. Standard No. 9-1 (NFPA 13).

Code Alternate CA311.2b: Exterior walls on floors in the Type I building may have opening protection as required for the building above the three-hour occupancy separation, provided the following criteria are met:

1. The floor contains a Group S, Division 3 parking garage; and

2. The floor is protected by an automatic sprinkler system conforming to U.B.C. Standard No. 9-1.

311.2.2.2 Group S, Division 3 Occupancy with Group S, Division 4 Occupancy above. Other provisions of this code notwithstanding, a Group S, Division 3 Occupancy, located in the basement or first story below a Group S, Division 4 Occupancy, as defined in Section 311.9, may be classified as a separate and distinct building for the purpose of determining the type of construction when all of the following conditions are met:

1. The allowable area of the structure shall be such that the sum of the ratios of the actual area divided by the allowable area for each separate occupancy shall not exceed one.

2. The Group S, Division 3 Occupancy is of Type I or II construction and is at least equal to the fire resistance of the Group S, Division 4 Occupancy.

3. The height and the number of the tiers above the basement shall be limited as specified in Table 3–H or Section 311.9.5.

4. The floor–ceiling assembly separating the Group S, Division 3 and Group S, Division 4 Occupancy shall be protected as required for the floor–ceiling assembly of the Group S, Division 3 Occupancy. Openings between the Group S, Division 3 and Group S, Division 4 Occupancy, except exit openings, need not be protected.

5. The Group S, Division 3 Occupancy is used exclusively for the parking or storage of private or pleasure–type motor vehicles, but may contain (i) mechanical equipment rooms incidental to the operation of the building and (ii) an office, and waiting and toilet rooms having a total area of not more than 1,000 square feet (93 m^2).

311.2.3 Specific use provisions.

311.2.3.1 Group S, Divisions 3 and 5 Occupancies. In areas where motor vehicles, boats or aircraft are stored, and in motor vehicle fuel–dispensing stations and repair garages, floor surfaces shall be of noncombustible, nonabsorbent materials. Floors shall drain to an approved oil separator or trap discharging to sewers in accordance with the Plumbing Code.

EXCEPTION: Floors may be surfaced or waterproofed with asphaltic paving materials in areas where motor vehicles or ((~~airplanes~~)) aircraft are stored or operated.

311.2.3.2 Marine or motor vehicle fuel–dispensing stations. Marine or motor vehicle fuel–dispensing stations, including canopies and supports over pumps, shall be of noncombustible, fire–retardant–treated wood or of one–hour fire–resistive construction.

EXCEPTIONS: 1. Roofs of one–story fuel–dispensing stations may be of heavy–timber construction.
2. Canopies conforming to Section 2603.13 may be erected over pumps.

Canopies under which fuels are dispensed shall have a clear, unobstructed height of not less than 13 feet 6 inches (4114 mm) to the lowest projecting element in the vehicle drive–through area.

A one–hour occupancy separation need not be provided between fuel–dispensing pumps covered with a canopy that is open on three or more sides, and a Group M Occupancy retail store having an area of less than 2,500 square feet (225 m^2) when the following conditions exist:

1. The Group M Occupancy is provided with two exits separated as required by Section 1003 and not located in the same exterior wall.

2. Pump islands are not located within 20 feet (6096 mm) of the Group M Occupancy retail store.

311.2.3.3 Parking garage headroom. Parking garages shall have an unobstructed headroom clearance of not less than ((~~7 feet (2134 mm)~~)) 6 feet 6 inches (1981 mm) above the finish floor to any ceiling, beam, pipe or similar obstruction, except for wall–mounted shelves, storage surfaces, racks or cabinets. See Section 1107 for requirements for accessible parking.

311.2.3.4 Group S, Division 2 Occupancy roof framing. In Division 2 Occupancies, the roof–framing system may be of unprotected construction.

311.2.3.5 Vehicle barriers. In parking garages where any parking area is located more than 5 feet (1524 mm) above the adjacent grade, vehicle barriers shall be provided.

EXCEPTION: Parking garages of Group U, Division 1 Occupancies.

Vehicle barriers shall have a minimum vertical dimension of 12 inches (305 mm) and shall be centered at 18 inches (457 mm) above the parking surface. See Table 16–B for load criterion.

311.2.3.6 Mini-storage warehouses. In mini-storage warehouse buildings, individual storage lockers shall be separated from each other with one-hour fire-resistive construction, and openings in the separation shall have one-hour protection.

EXCEPTION: The separation between individual storage lockers may be non-rated in rooms 500 square feet (46 m^2) or less in area and in sprinklered rooms of any size.

For storage accessory to Group R, Division 1 Occupancies, see Section 310.2.2. For automatic sprinkler system requirements for storage rooms in basements and basement-like stories, see Section 904.2.2.

Section 58. Section 311.7 of the 1994 Uniform Building Code is amended as follows:

311.7 Fire Detection, Alarm, **Sprinkler and Standpipe Systems.** When required by Section 904.2 or other provisions of this code, automatic sprinkler systems and standpipes shall be installed as specified in Chapter 9. Fire detection and fire alarm systems shall also be provided and installed as specified in Article 10 of the Fire Code. See also Section 1105.4.9 for requirements for visual alarms.

Section 59. Section 311.9 of the 1994 Uniform Building Code is amended as follows:

311.9 Group S, Division 4 Open Parking Garages.

311.9.1 Scope. Except where specific provisions are made in the following subsections, other requirements of this code shall apply.

311.9.2 Definitions.

311.9.2.1 General. For the purpose of this section, certain terms are defined as follows:

MECHANICAL–ACCESS OPEN PARKING GARAGES are open parking garages employing parking machines, lifts, elevators or other mechanical devices for vehicles moving from and to street level and in which public occupancy is prohibited above the street level.

OPEN PARKING GARAGE is a structure of Type I or II construction with the openings as described in Section 311.9.2.2 on two or more sides and which is used exclusively for the parking or storage of private or pleasure–type motor vehicles.

EXCEPTION: The grade–level tier may contain an office, and waiting and toilet rooms having a total area of not more than 1,000 square feet (93 m^2). Such area need not be separated from the open parking garage.

RAMP–ACCESS OPEN PARKING GARAGES are open parking garages employing a series of continuously rising floors or a series of interconnecting ramps between floors permitting the movement of vehicles under their own power from and to the street level.

311.9.2.2 Openings. For natural ventilation purposes, the exterior side of the structure shall have uniformly distributed openings on two or more sides. The area of such openings in exterior walls on a tier must be at least 20 percent of the total perimeter wall area of each tier. The aggregate length of the openings considered to be providing natural ventilation shall constitute a minimum of 40 percent of the perimeter of the tier. Interior wall lines and column lines shall be at least 20 percent open with uniformly distributed openings.

311.9.3 Construction. Construction shall be of noncombustible materials. Open parking garages shall meet the design requirements of Chapter 16. For vehicle barriers, see Section 311.2.3.5.

311.9.4 Area and height. Area and height of open parking garages shall be limited as set forth in Table 3–H, except for increases allowed by Section 311.9.5.

In structures having a spiral or sloping floor, the horizontal projection of the structure at any cross section shall not exceed the allowable area per parking tier. In the case of a structure having a continuous spiral floor, each 9 feet 6 inches (2896 mm) of height, or portion thereof, shall be considered a tier.

The clear height of a parking tier shall not be less than ((~~7 feet (2134 mm)~~)) 6 feet 6 inches (1981 mm) except that a lower clear height may be permitted in mechanical–access open parking garages when approved by the building official.

See Section 1107 for requirements for accessible parking.

311.9.5 Area and height increases. The area and height of structures with cross ventilation throughout may be increased in accordance with provisions of this subsection. Structures with sides open on three fourths of the building perimeter may be increased by 25 percent in area and one tier in height. Structures with sides open around the entire building perimeter may be increased 50 percent in area and one tier in height. For a side to be considered open under the above provisions, the total area of openings along the side shall not be less than 50 percent of the interior area of the side at each tier, and such openings shall be equally distributed along the length of the tier.

Open parking garages constructed to heights less than the maximums established by Table 3–H may have individual tier areas exceeding those otherwise permitted, provided the gross tier area of the structure does not exceed that permitted for the higher structure. At least three sides of each such larger tier shall have continuous horizontal openings not less than 30 inches (762 mm) in clear height extending for at least 80 percent of the length of the sides, and no part of such larger tier shall be more than 200 feet (60 960 mm) horizontally from such an opening. In addition, each such opening shall face a street or yard accessible to a street with a width of at least 30 feet (9144 mm) for the full length of the opening, and standpipes shall be provided in each such tier.

Structures of Type II–F.R., Type II One–hour or Type II–N construction, with all sides open, may be unlimited in area when the height does not exceed 75 feet (22 860 mm). For a side to be considered open, the total area of openings along the side shall not be less than 50 percent of the interior area of the side at each tier, and such openings shall be equally distributed along the length of the tier. All portions of tiers shall be within 200 feet (60 960 mm) horizontally from such openings.

311.9.6 Location on property. Exterior walls and openings in exterior walls shall comply with Table 5–A. The distance from an adjacent property line shall be determined in accordance with Section 503.

311.9.7 Stairs and exits. Where persons other than parking attendants are permitted, stairs and exits shall meet the requirements of Chapter 10, based on an occupant load of 200 square feet (18.6 m^2) per occupant. Where no persons other than parking attendants are permitted, there shall not be less than two 3–foot–wide (914 mm) stairs. Lifts may be installed for use of employees only, provided they are completely enclosed by noncombustible materials.

311.9.8 Standpipes. Standpipes shall be installed when required by the provisions of Chapter 9.

311.9.9 Sprinkler systems. When required by other provisions of this code, automatic sprinkler systems and standpipes shall be installed in accordance with the provisions of Chapter 9.

311.9.10 Enclosure of vertical openings. Enclosure shall not be required for vertical openings except as specified in Section 311.9.7 for lifts.

311.9.11 Ventilation. Ventilation, other than the percentage of openings specified in Section 311.9.2.2, shall not be required.

311.9.12 Prohibitions. The following uses and alterations are not permitted:

1. Automobile repair work.
2. Parking of buses, trucks and similar vehicles.
3. Partial or complete closing of required openings in exterior walls by tarpaulins or any other means.
4. Dispensing of fuel.

Section 60. Section 312.2 of the 1994 Uniform Building Code is amended as follows:

312.2 Construction, Height and Allowable Area.

312.2.1 General. Buildings or parts of buildings classed as Group U, Division 1 Occupancies because of the use or character of the occupancy shall not exceed 1,000 square feet (99 m^2) in area or one story in height except as

provided in Section 312.2.2. Any building or portion thereof that exceeds the limitations specified in this chapter shall be classed in the occupancy group other than Group U, Division 1 that it most nearly resembles.

312.2.2 Special area provisions. The total area of a private garage used only as a parking garage for private or pleasure–type motor vehicles where no repair work is done or fuel dispensed may be 3,000 square feet (279 m^2), provided the provisions set forth in Item 1 or 2 below are satisfied. More than one 3,000–square–foot (279 m^2) Group U, Division 1 Occupancy may be within the same building, provided each 3,000–square–foot (279 m^2) area is separated by area separation walls complying with Section 504.6.

1. For a mixed–occupancy building, the exterior wall and opening protection for the Group U, Division 1 portion of the building shall be as required for the major occupancy of the building. For such mixed–occupancy building, the allowable floor area of the building shall be as permitted for the major occupancy contained therein.

2. For a building containing only a Group U, Division 1 Occupancy, the exterior wall and opening protection shall be as required for a building classified as a Group R, Division 1 Occupancy.

312.2.3 Headroom clearance. Garages in connection with Group R, Division 1 Occupancies shall have an unobstructed headroom clearance of not less than ((~~7 feet (2134 mm)~~)) 6 feet 6 inches (1981 mm) above the finish floor to any ceiling, beam, pipe or similar construction except for wall–mounted shelves, storage surfaces, racks or cabinets.

Section 61. Table 3-A of the 1994 Uniform Building Code is amended as follows:

TABLE 3-A—DESCRIPTION OF OCCUPANCIES BY GROUP AND DIVISION

GROUP AND DIVISION	SECTION	DESCRIPTION OF OCCUPANCY[1]
A–1	303.1.1	A building or portion of a building having an assembly room with an occupant load of 1,000 or more and a legitimate stage.
A–2		A building or portion of a building having an assembly room with an occupant load of less than 1,000 and a legitimate stage.
A–2.1		A building or portion of a building having an assembly room with an occupant load of 300 or more without a legitimate stage, including such buildings used for educational purposes and not classed as a Group E or Group B Occupancy.
A–3		Any building or portion of a building having an assembly room with an occupant load of less than 300 without a legitimate stage, including such buildings used for educational purposes and not classed as a Group E or Group B Occupancy.
A–4		Stadiums, reviewing stands and amusement park structures not included within other Group A Occupancies.
B	304.1	A building or structure, or portion thereof, for office, professional or service-type transactions, including storage of records and accounts, eating and drinking establishments with an occupant load of less than 50.
E–1	305.1	Any building used for educational purposes through the 12th grade by 50 or more persons for more than 12 hours per week or four hours in any one day.
E–2		Any building used for educational purposes through the 12th grade by less than 50 persons for more than 12 hours per week or four hours in any one day.
E–3		((~~Any building or portion thereof used for day-care purposes for more than six persons~~)) Day care centers, preschools, and day treatment centers.
F–1	306.1	Moderate–hazard factory and industrial occupancies include factory and industrial uses not classified as Group F, Division 2 Occupancies.
F–2		Low–hazard factory and industrial occupancies include facilities producing noncombustible or nonexplosive materials which during finishing, packing or processing do not involve a significant fire hazard.
H-1	307.1	Occupancies with a quantity of material in the building in excess of those listed in Table 3–D which present a high explosion hazard as listed in Section 307.1.1.
H–2		Occupancies with a quantity of material in the building in excess of those listed in Table 3–D which present a moderate explosion hazard or a hazard from accelerated burning as listed in Section 307.1.1.
H–3		Occupancies with a quantity of material in the building in excess of those listed in Table 3–D which present a high fire or physical hazard as listed in Section 307.1.1.
H–4		Repair garages and body shops not classified as Group S, Division 3 Occupancies.
H–5		Aircraft repair hangars not classified as Group S, Division 5 Occupancies and heliports.
H–6	307.1 and 307.11	Semiconductor fabrication facilities and comparable research and development areas when the facilities in which hazardous production materials are used, and the aggregate quantity of material is in excess of those listed in Table 3–D or 3–E.
H–7	307.1	Occupancies having quantities of materials in excess of those listed in Table 3–E that are health hazards as listed in Section 307.1.1.
I–1.1	308.1	Nurseries for the full–time care of children under the age of six (each accommodating more than five children), hospitals, ((~~sanitariums~~)) psychiatric hospitals, nursing homes with nonambulatory or mobile nonambulatory patients and similar buildings (((~~each accommodating more than five patients~~))).
I–1.2		Health–care centers for ambulatory patients receiving outpatient medical care which may render the patient incapable of unassisted self–preservation (each tenant space accommodating more than five such patients).
I–2		Nursing homes for ambulatory patients((, ~~homes for children six years of age or over (each accommodating more than five persons)~~)).
I–3		((~~Mental~~)) Psychiatric hospitals, ((~~mental sanitariums,~~)) jails, prisons, reformatories and buildings where personal liberties of inmates or patients are similarly restrained.
M	309.1	A building or structure, or a portion thereof, for the display and sale of merchandise, and involving stocks of goods, wares or merchandise, incidental to such purposes and accessible to the public.
R–1	310.1	Hotels and apartment houses, congregate residences (each accommodating more than 10 persons).
R–3		((~~Dwellings, 1~~)) Lodging houses, detached one- and two-family dwellings, family child day care homes, and congregate residences (each accommodating 10 or fewer persons).
S–1	311.1	Moderate hazard storage occupancies include buildings or portions of buildings used for storage of combustible materials not classified as Group S, Division 2 or Group H Occupancies.
S–2		Low–hazard storage occupancies include buildings or portions of buildings used for storage of noncombustible materials.
S–3		Repair garages where work is limited to exchange of parts and maintenance requiring no open flame or welding, and parking garages not classified as Group S, Division 4 Occupancies.
S–4		Open parking garages and boat moorage.

S–5		Aircraft hangars and helistops.
U–1	312.1	Private garages, carports, sheds and agricultural buildings.
U–2		Fences over 6 feet (182.9 mm) high, tanks and towers.

[1]For detailed descriptions see the occupancy definitions in the noted sections.

Section 62. Table 3-D of the 1994 Uniform Building Code is amended as follows:

TABLE 3-D—EXEMPT AMOUNTS OF HAZARDOUS MATERIALS PRESENTING A PHYSICAL HAZARD

MAXIMUM QUANTITIES PER CONTROL AREA[1]

When two units are given, values within parentheses are in cubic feet (cu. ft.) or pounds (lbs.)

CONDITION		STORAGE[2]			USE[2]—CLOSED SYSTEMS			USE[2]—OPEN SYSTEMS	
Material	Class	Solid Lbs.[3] (Cu. Ft.)	Liquid Gallons[3] (Lbs.)	Gas Cu. Ft.	Solid Lbs. (Cu. Ft.)	Liquid Gallons (Lbs.)	Gas Cu. Ft.	Solid Lbs. (Cu. Ft.)	Liquid Gallons (Lbs.)
		× 0.4536 for kg × 0.0283 for m^3	× 3.785 for L × 0.4536 for kg	× 0.0283 for m^3	× 0.4536 for kg × 0.0283 for m^3	× 3.785 for L × 0.4536 for kg	× 0.0283 for m^3	× 0.4536 for kg × 0.0283 for m^3	× 3.785 for L × 0.4536 for kg
1.1 Combustible liquid[4,5,6,7,8,9]	II	N.A.	120[10]	N.A.	N.A.	120	N.A.	N.A.	30
	III–A	N.A.	330[10]	N.A.	N.A.	330	N.A.	N.A.	80
	III–B	N.A.	13,200[10,11]	N.A.	N.A.	13,200[11]	N.A.	N.A.	3,300[11]
1.2 Combustible fiber (loose) (baled)		(100) (1,000)	N.A. N.A.	N.A. N.A.	(100) (1,000)	N.A. N.A.	N.A. N.A.	(20) (200)	N.A. N.A.
1.3 Cryogenic, flammable or oxidizing		N.A.	45	N.A.	N.A.	45	N.A.	N.A.	10
2.1 Explosives[12]		1[10,13]	(1)[10,13]	N.A.	1/4	(1/4)	N.A.	1/4	(1/4)
3.1 Flammable solid		125[6,10]	N.A.	N.A.	14	N.A.	N.A.	14	N.A.
3.2 Flammable gas (gaseous) (liquefied)		N.A. N.A.	N.A. 15[6,10]	750[6,10] N.A.	N.A. N.A.	N.A. 15[6,10]	750[6,10] N.A.	N.A. N.A.	N.A. N.A.
3.3 Flammable liquid[4,5,6,7,8,9]	I–A	N.A.	30[10]	N.A.	N.A.	30	N.A.	N.A.	10
	I–B	N.A.	60[10]	N.A.	N.A.	60	N.A.	N.A.	15
	I–C	N.A.	90[10]	N.A.	N.A.	90	N.A.	N.A.	20
Combination I–A, I–B, I–C[15]		N.A.	120[10]	N.A.	N.A.	120	N.A.	N.A.	30
4.1 Organic peroxide, unclassified detonatable		1[10,12]	(1)[10,12]	N.A.	1/4[12]	(1/4)[12]	N.A.	1/4[12]	(1/4)[12]
4.2 Organic peroxide	I	5[6,10]	(5)[6,10]	N.A.	1[6]	(1)[6]	N.A.	1[6]	(1)[6]
	II	50[6,10]	(50)[6,10]	N.A.	50[6]	(50)[6]	N.A.	10[6]	(10)[6]
	III	125[6,10]	(125)[6,10]	N.A.	125[6]	(125)[6]	N.A.	25[6]	(25)[6]
	IV	500[6,10]	(500)[6,10]	N.A.	500[6]	(500)[6]	N.A.	100[6]	(100)[6]
	V	N.L.	N.L.	N.A.	N.L.	N.L.	N.A.	N.L.	N.L.
4.3 Oxidizer	4	1[10,12]	(1)[10,12]	N.A.	1/4[12]	(1/4)[12]	N.A.	1/4[12]	(1/4)[12]
	3[16]	10[6,10]	(10)[6,10]	N.A.	2[6]	(2)[6]	N.A.	2[6]	(2)[6]
	2	250[6,10]	(250)[6,10]	N.A.	250[6]	(250)[6]	N.A.	50[6]	(50)[6]
	1	4,000[6,10]	(4,000)[6,10]	N.A.	4,000[6]	(4,000)[6]	N.A.	1,000[6]	(1,000)[6]
4.4 Oxidizer—gas (gaseous)[6,10] (liquefied)[6,10]		N.A. N.A.	N.A. 15	1,500 N.A.	N.A. N.A.	N.A. 15	1,500 N.A.	N.A. N.A.	N.A. N.A.
5.1 Pyrophoric		4[10,12]	(4)[10,12]	50[10,12]	1[12]	(1)[12]	10[10,12]	0	0
6.1 Unstable (reactive)	4	1[10,12]	(1)[10,12]	10[10,12]	1/4[12]	(1/4)[12]	2[10,12]	1/4[12]	(1/4)[12]
	3	5[6,10]	(5)[6,10]	50[6,10]	1[6]	(1)[6]	10[6,10]	1[6]	(1)[6]

	2	50[6,10]	(50)[6,10]	250[6,10]	50[6]	(50)[6]	250[6,10]	10[6]	(10)[6]
	1	N.L.	N.L.	750[6,10]	N.L.	N.L.	N.L.	N.L.	N.L.
7.1 Water reactive	3	5[6,10]	(5)[6,10]	N.A.	5[6]	(5)[6]	N.A.	1[6]	(1)[6]
	2	50[6,10]	(50)[6,10]	N.A.	50[6]	(50)[6]	N.A.	10[6]	(10)[6]
	1	125[10,11]	(125)[10,11]	N.A.	125[11]	(125)[11]	N.A.	25[11]	(25)[11]

N.A.—Not applicable. N.L.—Not limited.

[1]Control areas shall be separated from each other by not less than a one-hour fire-resistive occupancy separation. The number of control areas within a building used for retail or wholesale sales shall not exceed two. The number of control areas in buildings with other uses shall not exceed four. See Section 204.

[2]The aggregate quantity in use and storage shall not exceed the quantity listed for storage.

[3]The aggregate quantity of nonflammable solid and nonflammable or noncombustible liquid hazardous materials within a single control area of Group M Occupancies used for retail sales may exceed the exempt amounts when such areas are in compliance with the Fire Code.

[4]The quantities of alcoholic beverages in retail sales uses are unlimited provided the liquids are packaged in individual containers not exceeding four liters.
The quantities of medicines, foodstuffs and cosmetics containing not more than 50 percent of volume of water-miscible liquids and with the remainder of the solutions not being flammable in retail sales or storage occupancies are unlimited when packaged in individual containers not exceeding four liters.

[5]For aerosols, see the Fire Code.

[6]Quantities may be increased 100 percent in sprinklered buildings. When Footnote 10 also applies, the increase for both footnotes may be applied.

[7]For storage and use of flammable and combustible liquids in Groups A, B, E, F, H, I, M, R, S and U Occupancies, see Sections 303.8, 304.8, 305.8, 306.8, 307.8, 308.8, 309.8, 310.12, 311.8 and 312.4.

[8]For wholesale and retail sales use, also see the Fire Code.

[9]Spray application of any quantity of flammable or combustible liquids shall be conducted as set forth in the Fire Code.

[10]Quantities may be increased 100 percent when stored in approved storage cabinets, gas cabinets or exhausted enclosures or when under Fire Department permit as specified in the Fire Code. When Footnote 6 also applies, the increase for both footnotes may be applied.

[11]The quantities permitted in a sprinklered building are not limited.

[12]Permitted in sprinklered buildings only. None is allowed in unsprinklered buildings.

[13]One pound of black sporting powder and 20 pounds (9 kg) of smokeless powder are permitted in sprinklered or unsprinklered buildings.

[14]See definitions of Divisions 2 and 3 in Section 307.1.

[15]Containing not more than the exempt amounts of Class I-A, Class I-B or Class I-C flammable liquids.

[16]A maximum quantity of 200 pounds (90.7 kg) of solid or 20 gallons (75.7 L) of liquid Class 3 oxidizers may be permitted in Groups I, R and U Occupancies when such materials are necessary for maintenance purposes or operation of equipment as set forth in the Fire Code.

Section 63. Table 3-E of the 1994 Uniform Building Code is amended as follows:

TABLE 3-E—EXEMPT AMOUNTS OF HAZARDOUS MATERIALS PRESENTING A HEALTH HAZARD MAXIMUM QUANTITIES PER CONTROL AREA[1,2]
When two units are given, values within parentheses are in pounds (lbs.)

MATERIAL	STORAGE[3]			USE[3]—CLOSED SYSTEMS			USE[3]—OPEN SYSTEMS	
	Solid Lbs.[4,5,6]	Liquid Gallons[4,5,6] (Lbs.)	Gas Cu. Ft.[5]	Solid Lbs.[4,5]	Liquid Gallons[4,5] (Lbs.)	Gas Cu. Ft.[5]	Solid Lbs.[4,5]	Liquid Gallons[4,5] (Lbs.)
	× 0.4536 for kg	× 3.785 for L × 0.4536 for kg	× 0.028 for m^3	× 0.4536 for kg	× 3.785 for L × 0.4536 for kg	× 0.028 for m^3	× 0.4536 for kg	× 3.785 for L × 0.4536 for kg
1. Corrosives	5,000	500	810[6]	5,000	500	810[6]	1,000	100
2. Highly toxics[7]	1	(1)	20[8]	1	(1)	20[8]	1/4	(1/4)
((~~3. Irritants~~[9]	~~5,000~~	~~500~~	~~810~~[6]	~~5,000~~	~~500~~	~~810~~[6]	~~1,000~~	~~100~~
~~4. Sensitizers~~[9]	~~5,000~~	~~500~~	~~810~~[6]	~~5,000~~	~~500~~	~~810~~[6]	~~1,000~~	~~100~~
~~5. Other health hazards~~[9]	~~5,000~~	~~500~~	~~810~~[6]	~~5,000~~	~~500~~	~~810~~[6]	~~1,000~~	~~100~~))
((6)) 3. Toxics	500	(500)	810[6]	500	(500)	810[6]	125	(125)

[1]Control areas shall be separated from each other by not less than a one-hour fire-resistive occupancy separation. The number of control areas within a building used for retail or wholesale sales shall not exceed two. The number of control areas in buildings with other uses shall not exceed four. See Section 204.

[2]The quantities of medicines, foodstuffs and cosmetics, containing not more than 50 percent by volume of water–miscible liquids and with the remainder of the solutions not being flammable, in retail sales uses are unlimited when packaged in individual containers not exceeding 4 liters.

[3]The aggregate quantity in use and storage shall not exceed the quantity listed for storage.

[4]The aggregate quantity of nonflammable solid and nonflammable or noncombustible liquid health hazard materials within a single control area of Group M Occupancies used for retail sales may exceed the exempt amounts when such areas are in compliance with the Fire Code.

[5]Quantities may be increased 100 percent in sprinklered buildings. When Footnote 6 also applies, the increase for both footnotes may be applied.

[6]Quantities may be increased 100 percent when stored in approved storage cabinets, gas cabinets or exhausted enclosures as specified in the Fire Code. When Footnote 5 also applies, the increase for both footnotes may be applied.

[7]For special provisions, see the Fire Code.

[8]Permitted only when stored in approved exhausted gas cabinets, exhausted enclosures or fume hoods.

((~~[9]Irritants, sensitizers and other health hazards do not include commonly used building materials and consumer products which are not otherwise regulated by this code.~~))

Section 64. Section 402 of the 1994 Uniform Building Code is amended as follows:

SECTION 402 — ATRIA

402.1 General

402.1.1 Scope. Buildings, of other than Group H Occupancy, with automatic sprinkler protection throughout may have atria complying with the provisions of this section. Such atria shall have a minimum opening area and dimension as set forth in Table 4–A.

Interpretation I402.1: No increases for building area or height are allowed for the sprinkler protection.

402.1.2. **Predesign Conference.** At least 60 days prior to application, the applicant shall arrange a predesign conference with the design team, the building official and the fire chief, to review the proposed smoke control and life safety systems for the building. It is the purpose of the meeting to obtain conceptual approval from the building official and the fire chief of the proposed systems and to allow for a design based upon the latest state-of-the-art.

The building official and fire chief may require sufficient documentation, based upon appropriate analyses, that the concept meets the intent of nationally recognized good practices. The building permit shall not be issued until the building official and fire chief have approved, in writing, the smoke control and life safety systems for the building. The documentation of the predesign meeting shall be reflected on the plans for the building and become a permanent part of the Department of Construction and Land Use's records.

402.2 Smoke–control System. A smoke–control system meeting the requirements of Section 905 shall be provided within the atrium and areas open to the atrium. The smoke–control system shall operate automatically upon actuation of the automatic sprinkler system within the atrium or areas open to the atrium and as required by Section 905.9.

In addition to the smoke control system, when the roof of an atrium is more than 75 feet above the lowest level of fire department vehicle access, it shall have a gravity smoke exhaust system conforming to Section 906. The gravity system shall include make-up air openings in the lower portion of the atrium.

402.3 Enclosure of Atria. Atria shall be separated from adjacent spaces by not less than one–hour fire–resistive construction.

EXCEPTIONS: 1. The separation between atria and tenant spaces that are not guest rooms, congregate residences or dwelling units may be omitted at ((~~three floor levels.~~)) the two lowest floor levels.

2. Open exit balconies are permitted within ((~~the atrium~~)) atria at the second floor level to gain access to all required exits. Open exit balconies are permitted within the atrium at the third level and above and to gain access to only one of the required exit stairways.

Code Alternate CA402.3.a: The separation between the atrium and tenant spaces that are not guest rooms, congregate residences, or dwelling units may be omitted on three floors when:

1. The perimeter of the opening is protected by draft curtains and a row of automatic sprinkler heads not more than six feet (1829 mm) on center as required for escalator protection;

2. All spaces of the building separated from the atrium by less than one-hour fire-resistive construction are equipped with an automatic smoke detection system;

3. Tenant spaces open to the atrium have access to two enclosed exits separated by one-half the building diagonal with one exit located so that occupants can exit in a direction away from the atrium. For the purpose of this requirement "away from the atrium" means not being forced to exit parallel and adjacent to the atrium opening.

Code Alternate CA402.3.b: The separation between the atrium and tenant spaces that are not guest rooms, congregate residences, or dwelling units may be omitted on four floors when:

1. The conditions of Code Alternate CA402.3.A are met; and

2. The building is of Type I-F.R. or Type II-F.R. construction.

Openings in the atrium enclosure other than fixed glazing shall be protected by smoke– and draft–control assemblies conforming to Section 1005.8.

EXCEPTION: Other tight–fitting doors which are maintained automatic closing, in accordance with Section 713.2, by actuation of a smoke detector, or self–closing may be used when protected as required for glazed openings in Exception 2 below.

Fixed glazed openings in the atrium enclosure shall be equipped with fire windows having a fire–resistive rating of not less than three–fourths hour, and the total area of such openings shall not exceed 25 percent of the area of the common wall between the atrium and the room into which the opening is provided.

EXCEPTION((S)) : ((~~1. In Group R, Division 1 Occupancies, openings may be unprotected when the floor area of each guest room, congregate residence or dwelling unit does not exceed 1,000 square feet (93 m^2) and each room or unit has an approved exit not entering the atrium.~~))

((~~2.~~)) Guest rooms, dwelling units, congregate residences and tenant spaces may be separated from the atrium by approved fixed wired glass set in steel frames. In lieu thereof, tempered or laminated glass or listed glass block may be used, subject to the following:

((~~2.1~~)) 1. The glass shall be protected by a sprinkler system equipped with listed quick–response sprinklers. The sprinkler system shall completely wet the entire surface of the glass wall when actuated. Where there are walking surfaces on both sides of the glass, both sides of the glass shall be so protected.

((~~2.2~~)) 2. The tempered or laminated glass shall be in a gasketed frame so installed that the glazing system may deflect without breaking (loading) the glass before the sprinkler system operates.

((~~2.3~~)) 3. The glass block wall assembly shall be installed in accordance with its listing for a three–fourths–hour fire–resistive rating and Section 2110.

((~~2.4~~)) 4. Obstructions such as curtain rods, drapery traverse rods, curtains, drapes or similar materials shall not be installed between the sprinkler and the glass.

5. The building is equipped with automatic smoke detection on all floors served by the atrium except for tenant spaces separated from the atrium by one-hour fire-resistive construction.

402.4 Travel Distance. When a required exit enters the atrium space, the travel distance from the doorway of the tenant space to an enclosed stairway, horizontal exit, exterior door or exit passageway shall not exceed 100 feet (30 480 mm).

402.5 Group I Occupancy Exits. In Group I Occupancies, other than jails, prisons and reformatories, sleeping rooms shall not be permitted to have required exits through the atrium.

402.6 Occupancy Separation Exceptions. The vertical portion of the occupancy separation which is adjacent to the atrium may be omitted between a Group B Occupancy office, Group M Occupancy sales area or Group A, Division 3 Occupancy and Group R, Division 1 apartment, congregate residence or guest room located on another level.

402.7 Standby Power. Smoke control for the atrium and the smoke–control system for the tenant space shall be provided with standby power as required in Section 905.8.

Code Alternate CA402.7: Standby power is not required for buildings that have at least two exits and atria with a total volume of less than 40,000 cubic feet (1133m^3).

402.8 Interior Finish. The interior finish of walls and ceilings of the atrium and all unseparated tenant spaces ((~~allowed under Exception 1 to the first paragraph of Section 402.3~~)) shall be Class ((~~I~~)) II with no reduction in class for sprinkler protection.

402.9 Acceptance of the Smoke-control System. Acceptance shall be as required by Section 905.15.

402.10 Combustible Furnishings in Atria. The quantity of combustible furnishings in atria shall not exceed that specified in the Fire Code.

402.11 Inspection of the Smoke-control System. All operating parts of the smoke-control systems shall be routinely tested according to requirements of the Fire Code.

Section 65. Section 403 of the 1994 Uniform Building Code is amended as follows:

SECTION 403 — SPECIAL PROVISIONS FOR ((~~GROUP B OFFICE BUILDINGS AND GROUP R, DIVISION 1 OCCUPANCIES~~)) HIGH RISE BUILDINGS

403.1 Scope. This section applies to all ((~~Group B office~~)) buildings ((~~and Group R, Division 1 Occupancies, each~~)) having floors used for human occupancy located more than 75 feet (22 860 mm) above the lowest level of fire department vehicle access and to buildings having floors used for human occupancy more than 35 feet above grade which lack fire department vehicle access to at least one side. Such buildings shall be of Type I or II–F.R. construction and shall be provided with an approved automatic sprinkler system in accordance with Section 403.2.

EXCEPTIONS: 1. Group S, Division 4 open parking garage occupancies.
2. Subject to the approval of the building official:
2.1. Group A, Division 4 Occupancies.
2.2. Other occupancies where the occupant load above 75 feet (22 860 mm) is very low.

Interpretation I403.1: For the purpose of this section, occupied roof decks shall be considered floors used for human occupancy where the occupant load of the deck is 10 or more on the roof of an unsprinklered building or where the occupant load is 50 or more on the roof of a sprinklered building.

403.1.2. Design Alternatives - Predesign Conference. At least 60 days prior to application, the applicant shall arrange a predesign conference with the design team, the building official and the fire chief, to review the proposed emergency life safety systems for the building and the protection of the life safety systems. It is the purpose of the meeting to obtain conceptual approval from the building official and the fire chief of the proposed systems and to allow for design based upon the latest state-of-the-art.

The building official and fire chief may require sufficient documentation, based upon appropriate analyses, that the proposal meets the intent of nationally recognized good practices. The building permit shall not be issued until the building official and fire chief have approved, in writing, the emergency life safety systems for the building and the protection of the life safety systems. The documentation of the predesign meeting shall be reflected on the plans for the building and become a permanent part of the Department of Construction and Land Use's records.

403.1.3 Testing. All mechanical and electrical equipment installed per approved plans and specifications pursuant to this section shall be tested and proven to be in proper working condition to the satisfaction of the fire chief before issuance of the Certificate of Occupancy. Such system shall be maintained in accordance with the Fire Code.

403.2 Automatic Sprinkler System.

403.2.1 System design. The automatic sprinkler system shall be provided throughout the building as specified by U.B.C. Standard 9–1, and shall be designed in accordance with that standard and the following.

1. Shutoff valves and a water–flow device shall be provided for each floor. The sprinkler riser may be combined with the standpipe riser. In addition to actuating a local alarm on the floor upon which the water flow is detected, such valves shall be supervised by a continuously manned emergency control center or by an approved central station service.

2. ((~~In Seismic Zones 2, 3 and 4, in addition to the main water supply, a secondary on–site supply of water equal to the hydraulically calculated sprinkler design demand plus 100 gallons per minute (378.5 L/min.) additional for the total standpipe system shall be provided.~~)) An on-site supply of water equal to a 20-minute demand or 15,000 gallons (56 781 L) on a combined sprinkler and standpipe, whichever is the smaller, shall be provided. This supply shall be automatically available if the principal supply fails ((~~and shall have a duration of 30 minutes~~)).

EXCEPTION: Subject to the approval of the fire chief, the on-site water supply may be waived when water is supplied to the property from two different water mains which are separated by a sectional valve.

3. The sprinkler system shall be looped between standpipe risers at the bottom, top and mid-height of all buildings with a maximum of 20 stories served by any loop. The installation of check valves shall be approved by the fire chief.

4. Pitching of lines is not required.

5. A minimum of two fire pumps independently driven shall be provided and sized for the sprinkler demand and for standpipe operations.

403.2.2 Modifications. The following modifications of code requirements are permitted:

1. In buildings of Type I construction the fire–resistive time periods set forth in Table 6–A may be reduced by one hour for interior bearing walls, exterior bearing and nonbearing walls, roofs and the beams supporting roofs, provided they do not frame into columns or support tributary areas exceeding 500 square feet (46 m^2). In buildings of Type II–F.R. construction the fire–resistive time period set forth in Table 6–A may be reduced by one hour for interior bearing walls, exterior bearing and nonbearing walls, but no reduction is allowed for roofs.

Vertical shafts other than stairway enclosures and elevator shafts may be reduced to one hour when sprinklers are installed within the shafts at alternate floors. The fire–resistive time period reduction as specified herein shall not apply to exterior bearing and nonbearing walls whose fire–resistive rating is less than four hours.

2. Except ((~~for~~)) where corridors ((~~in Group B offices and Group R, Division 1 Occupancies~~)) are required by Section 1005.7 and partitions separating dwelling units or guest rooms, all interior nonbearing partitions required to be one–hour fire–resistive construction by Table 6–A may be of noncombustible construction without a fire–resistive time period.

3. ((~~Fire dampers, other than those needed to protect floor–ceiling assemblies to maintain the fire resistance of the assembly, are not required.~~)) See exceptions for sprinklered buildings in Section 709.3.2.

4. Emergency windows required by Section 310.4 are not required.

5. A manually operated fire alarm system is not required on floors occupied by Group B offices.

403.3 Smoke and Heat Detection.

403.3.1 Smoke Detection. Smoke detectors shall be provided in accordance with this subsection. Smoke detectors shall be connected to an automatic fire alarm system installed in accordance with the Fire Code. The actuation of any detector required by this subsection shall operate the emergency voice alarm signaling system and shall place into operation all equipment necessary to prevent the recirculation of smoke.

Smoke detectors shall be located as follows:

1. In every unsprinklered mechanical equipment, electrical, ((~~transformer,~~)) telephone equipment, elevator machine or similar room and in elevator lobbies. Elevator lobby detectors shall be connected to an alarm verification zone or be listed as releasing devices.

2. In the main return–air and exhaust–air plenum of each air–conditioning system. Such detector shall be located in a serviceable area downstream of the last duct inlet.

3. At each connection to a vertical duct or riser serving two or more stories from a return–air duct or plenum of an air–conditioning system. In Group R, Division 1 Occupancies, an approved smoke detector may be used in each return–air riser carrying not more than 5,000 cubic feet per minute (2360 L/s) and serving not more than 10 air inlet openings.

4. For Group R, Division 1 Occupancies in all interior corridors serving as a required exit for a occupant load of 10 or more.

403.3.2 Heat Detection. At least one approved heat detector suitable for the intended use shall be installed in transformer vaults.

403.3.3 Sequence of Operation of Smoke and Heat Detection. The sequence and/or timing of operation of smoke and heat detection systems shall be determined at the predesign conference.

403.4 Smoke Control. A smoke–control system meeting the requirements of Chapter 9 shall be provided.

403.5 Fire Alarm and Communication Systems.

403.5.1 General. The fire alarm, emergency voice/alarm signaling system and fire department communication systems shall be designed and installed as set forth in this code and the Fire Code. For Group B office occupancies alarm sound levels shall not be less than 55 dBa. Audibility tests shall be performed with the doors open to offices of 300 square feet (28 m^2) or less and all other doors closed.

403.5.2 Emergency voice alarm signaling system. The operation of any automatic fire detector, sprinkler or water–flow device shall automatically sound ((~~an alert tone~~)) a warning signal which conforms to fire department standards followed by voice instructions giving appropriate information and direction on a general or selective basis to the following terminal areas:

1. Elevators.

2. Elevator lobbies.

3. Corridors.

4. Exit stairways.

5. Rooms and tenant spaces exceeding 1,000 square feet (93 m^2) in area.

6. Dwelling units in apartment houses.

7. Hotel guest rooms or suites.

A manual override for emergency voice communication shall be provided for all paging zones.

403.5.3 Fire department communication system. A two–way, approved fire department communication system shall be provided for fire department use. It shall operate between the central control station and elevators, ((~~elevator lobbies,~~)) emergency and standby power rooms and at a location adjacent to the hose connection outside of stairway, or alternative location determined at the predesign conference and on the stairway side of every entry door ~~and~~ at entries into enclosed stairways. The stairway phones or phone jacks shall be a part of this system.

403.6 Central Control Station.

403.6.1 General. A central control station room for fire department operations shall be provided. The location, ((~~and accessibility~~)) size and arrangement of the central control station room shall be approved by the fire department. The central control station room shall be separated from the remainder of the building by not less than a one–hour fire–resistive occupancy separation. ((~~The room shall be a minimum of 96 square feet (9 m^2) with a minimum dimension of 8 feet (2438 mm).~~)) It shall contain the following as a minimum:

1. The voice alarm and public address system panels.

2. The fire department communications panel.

3. Fire–detection and alarm system annunciator panels.

4. Annunciator visually indicating the location of the elevators and whether they are operational.

5. Status indicators and controls for air–handling systems.

6. Controls for unlocking all stairway doors simultaneously.

7. Sprinkler valve and water–flow detector display panels.

8. Emergency and standby power status indicators.

9. A telephone for fire department use with controlled access to the public telephone system.

10. Fire pump status indicators.

11. Schematic building plans indicating the typical floor plan and detailing the building core, exit facilities, fire–protection systems, firefighting equipment and fire department access.

12. Work table or counter.

13. Status indicator and controls for elevators.

403.6.2 Annunciation identification. Control panels in the central control station shall be permanently identified as to function.

Alarm, supervisory and trouble signals as required by Items 3 and 7 above shall be annunciated in compliance with the Fire Code in the central control station by means of an audible and visual indicator. For purposes of annunciation, zoning shall be in accordance with the following:

1. When the system serves more than one building, each building shall be considered separately.

2. Each floor shall be considered a separate zone. When one or more sprinkler risers serve the same floor, each riser shall be considered a separate zone.

EXCEPTION: When more than one riser serves the same system on the floor.

403.7 Elevators. Elevators and elevator lobbies shall comply with the provisions of Chapter 30. Elevators traveling more than 75 feet (22 860 mm) shall comply with the requirements of Section 905 and the following:

NOTE: A bank of elevators is a group of elevators or a single elevator controlled by a common operating system; that is, all those elevators which respond to a single call button constitute a bank of elevators. There is no limit on the number of cars which may be in a bank or group, but there may not be more than four cars within a common hoistway.

In buildings with stories which are located more than 160 feet (48 768 mm) above the lowest point of fire department access, access to each floor shall be provided by not less than two elevators located in separate hoistways. The machine rooms for the separate hoistways shall also be separated.

EXCEPTION: Subject to the approval of the building official, floors may be served by one elevator.

1. Elevators on all floors shall open into elevator lobbies which are separated from the remainder of the building, including corridors and other exits, by walls extending from the floor to the underside of the fire–resistive floor or roof above. Such walls shall not be of less than one–hour fire–resistive construction. Openings through such walls shall conform to Section 1005.8.

EXCEPTIONS: 1. The main entrance–level elevator lobby in office buildings.

2. Elevator lobbies located within an atrium complying with the provisions of Section 402.

3. In ((~~fully sprinklered~~)) office buildings, corridors may lead through enclosed elevator lobbies if all areas of the building have access to at least one required exit without passing through the elevator lobby.

Code Alternate CA403.7: Elevator lobbies need not be provided where elevator hoistways are pressurized to a minimum of 0.10 inch of water column relative to atmospheric pressure with all cars at the designated recall level with the doors in the open position.

2. Each elevator lobby shall be provided with ((~~an approved listed~~)) smoke ((~~detector~~)) detection located on the lobby ceiling. When the detector is activated, elevator doors shall not open and all cars serving that lobby are to return to the main floor and be under manual control only. If the main floor detector or a transfer floor detector is activated, all cars serving the main floor or transfer floor shall return to a location approved by the fire department and building official and be under manual control only. The detector may serve to close the lobby doors, additional doors at the hoistway opening allowed in Section ((~~3007~~)) 3016.9 and smoke dampers serving the lobby.

3. Elevator hoistways shall not be vented through an elevator machine room. ((~~Cable slots entering the machine room shall be sleeved into the machine room. Such sleeves shall be no larger than necessary for free passage of the cables.~~)) Each elevator machine room shall be treated as a separate smoke–control zone.

403.8 Standby Power, Light and Emergency Systems.

403.8.1 Standby power. A standby power–generator set conforming to the Electrical Code shall be provided on the premises. The set shall supply all functions required by this section at full power. Set supervisions with manual start and transfer override features shall be provided at the central control station.

An on–premises fuel supply sufficient for not less than two hours' full–demand operation of the system shall be provided.

The standby system shall have a capacity and rating that would supply all equipment required to be operational at the same time, including a selected elevator in each bank, as defined in Section 403.7 above. The generating capacity need not be sized to operate all the connected electrical equipment simultaneously.

All power((~~,~~))and control wiring for lighting, signal ((~~and~~)) communication and emergency facilities specified in Sections 403.3, 403.4, 403.5, 403.6, 403.7 and 403.8, as applicable; fire pumps required to maintain pressure, standby lighting and normal circuits supplying exit signs and exit illumination shall be transferable to the standby source. Each elevator shall be transferable to the standby power source. Other than the selected car(s), the elevators need not run simultaneously and the switching may be either manual or automatic.

403.8.2 Standby lighting. Standby lighting shall be provided as follows:

1. Separate lighting circuits and fixtures sufficient to provide light at the rate of 1/4 watt of incandescent illumination per square foot of floor area ((~~with an intensity of not less than one footcandle measured at floor level~~)) in all exit corridors, stairways, pressurized enclosures, elevator cars and lobbies and other areas which are clearly a part of the escape route.

Code Alternate CA403.8: Installations using fluorescent lamps shall have a minimum wattage of at least 1/3 of the incandescent requirements.

2. All circuits supply lighting for the central control station and mechanical equipment room.

403.8.3 Emergency systems. The following are classified as emergency systems and shall operate within 10 seconds of failure of the normal power supply:

1. Exit sign and exit illumination as required by Sections 1012 and 1013.

2. Elevator car lighting.

3. Fire alarm system.

403.9 Exits. Exits shall comply with other requirements of this code and the following:

1. All stairway doors which are locked from the stairway side shall have the capability of being unlocked simultaneously without unlatching upon a signal from the central control station.

2. A telephone or other two–way communications system connected to an approved emergency service which operates continuously shall be provided at not less than every fifth floor in each required stairway where other provisions of this code permit the doors to be locked.

3. Re-entry shall be provided at approximately 5-story intervals at all times the building is occupied.

4. All required exit stairways shall terminate at the roof in a penthouse with a door complying with Sections 1004.2 and 1004.6. The building official may approve an alternate design for rescue purposes at the pre-design conference.

403.10 Seismic Considerations. In Seismic Zones 2, 3 and 4, the anchorage of mechanical and electrical equipment required for life–safety systems, including fire pumps and elevator drive and suspension systems, shall be designed in accordance with the requirements of Section 1624.

403.11 Emergency Operational Plan. Prior to the issuance of a Certificate of Occupancy, the owner-occupant of the building shall assign a responsible person as the building's Fire Safety Director to work with the fire chief in establishing an operational plan for the building. Such operational plan shall contain the guideline procedures to be followed and responsibilities of the fire department, building employees, and tenants under emergency conditions including special provisions for persons with disabilities. The plan shall also include procedures for operation, maintenance and testing of the life safety systems and the allowable use and occupancy of each portion of the building. One copy of the operational plan shall be filed with the fire chief, and one shall be posted in the central control station, prior to issuance of the Certificate of Occupancy.

403.12 Location of Standpipes and Hose Connections. Standpipes shall be provided as specified in Section 904.5. Such standpipes shall be located in required stairways. In buildings without vestibules each standpipe shall have two firefighter's hose connections on each floor. One connection shall be located in each required stair shaft. The second connection shall be located within 10 feet (3048 mm) of the corridor or room side of the stair enclosure door. In sprinklered buildings the fire chief may allow only one standpipe connection at the room or corridor side of the stair enclosure at each floor when the distance from that standpipe connection to any part of that floor is within 150 feet (45 720 mm) of hose travel distance.

403.13 Signs.

403.13.1. Elevator Lobbies. A sign shall be posted in every lobby above each call switch noting that the elevators will be recalled to the building lobby on fire alarm. This sign shall warn persons not to use the elevator in the event of fire and shall direct them to use the stairway or give other appropriate directions for exiting.

EXCEPTION: Signs need not be posted in lobbies at the main exit level when exits are obviously identifiable if approved by the building official.

403.13.2. Main Floor Lobbies. A sign indicating the number of each elevator shall be posted and maintained at each main floor elevator lobby and at alternate floors of recall, when provided.

403.13.3. Stair Re-entry Signs. A sign shall be posted on each floor landing within a stairway indicating where re-entry is provided into the building or indicating the location of telephones or other means of two-way communication.

403.13.4. Other Signs. Other signs required by this code, including, but not limited to, stairway identification signs required by Section 1006.16 and exit signs required by Section 1013, shall be provided.

Section 66. Section 404.3 of the 1994 Uniform Building Code is amended as follows:

404.3 Special Provisions.

404.3.1 Automatic sprinkler systems. The covered mall building shall be provided with an automatic sprinkler system conforming to the provisions of U.B.C. Standard 9–1 which is a part of this code. See Chapter 35. In addition to these standards, the automatic sprinkler system shall comply with the following:

1. All automatic sprinkler system control valves shall be electrically supervised by an approved central, proprietary or remote station or a local alarm service which will give an audible signal at a constantly attended location.

2. The automatic sprinkler system shall be complete and operative throughout the covered mall building prior to occupancy of any of the tenant spaces. The separation between an unoccupied tenant space and the covered mall building shall be subject to the approval of the building official and fire department.

Interpretation I404.3: Item 2 above requires that the sprinkler system be completed only in the common areas of the covered mall building, not in unoccupied tenant spaces.

3. Sprinkler protection for the mall shall be independent from that provided for tenant spaces. However, tenant spaces may be supplied by the same system if they can be independently controlled.

The respective increases for area and height for covered mall buildings, including anchor buildings, specified in Sections 311.9, 505 and 506 of this code, shall be permitted.

404.3.2 Standpipes. There shall be a combined Class I standpipe outlet connected to a system sized to deliver 250 gallons per minute (946.4 L/min.) at the most hydraulically remote outlet. The outlet shall be supplied from the mall zone sprinkler system and shall be hydraulically calculated. Standpipe outlets shall be provided at each of the following locations:

1. Within the mall at the entrance to each exit passage or exit corridor.

2. At each floor–level landing within enclosed stairways opening directly onto the mall.

3. At exterior public entrances to the mall.

404.3.3 Smoke–control system. A smoke–control system meeting the requirements of Section 905 shall be provided.

EXCEPTION: A smoke–control system need not be provided when both of the following conditions exist:
1. The mall does not exceed one story and
2. The gross leasable area does not exceed 24,000 square feet (2230 m^2).

404.3.4 Fire department access to equipment. Rooms or areas containing controls for air–conditioning systems, automatic fire–extinguishing systems or other detection, suppression or control elements shall be identified for use by the fire department.

404.3.5 Tenant separation. Each tenant space shall be separated from other tenant spaces by a wall having a fire–resistive rating of not less than one hour. The separation wall shall extend from the floor to the underside of the ceiling above. Except as required by other provisions of this code, the ceiling need not be a fire–resistive assembly. A separation is not required between any tenant space and a mall except for occupancy separations required by Section 404.5 or for smoke–control purposes.

404.3.6 Public address system. Covered mall buildings exceeding 50,000 square feet (4645.2 m^2) in total floor area shall be provided with a public address system accessible for use by the fire department. Covered mall buildings of 50,000 square feet (4645.2 m^2) or less in total floor area, when provided with a public address system, shall have such system accessible for use by the fire department.

404.3.7 Plastic panels and plastic signs. Within every story or level and from side wall to side wall of each tenant space or mall, approved plastic panels and signs shall be limited as follows:

1. They shall not exceed 20 percent of the wall area facing the mall;

2. They shall not exceed a height of 36 inches (914 mm) except that if the sign is vertical then the height shall not exceed 96 inches (2438 mm) and the width shall not exceed 36 inches (914 mm);

3. They shall be located a minimum distance of 18 inches (457 mm) from adjacent tenants.

((~~404.3.8 Lease plan. Each covered mall building owner shall provide both the building and fire departments with a lease plan showing the location of each occupancy and its exits after the certificate of occupancy has been~~

~~issued. Such plans shall be kept current. No modifications or changes in occupancy or use shall be made from that shown on the lease plan without prior approval of the building official.~~))

((~~404.3.9~~)) 404.3.8 **Openings between anchor building and mall.** Except for the occupancy separation between Group R, Division 1 sleeping rooms and the mall, openings between anchor buildings of Type I, II–F.R, II One–hour or II–N construction and the mall need not be protected.

((~~404.3.10~~)) 404.3.9 **Standby power.** Covered mall buildings exceeding 50,000 square feet (4645.2 m^2) shall be provided with standby power systems which are capable of operating the public address system, the smoke–control activation system and the smoke–control equipment as required by Section 905.

Section 67. Section 405.1 of the 1994 Uniform Building Code is amended as follows:

405.1 Scope.

405.1.1 Standards of quality. Stages, platforms and accessory spaces in assembly occupancies shall conform with the requirements of Section 405.

The standards listed below labeled a "U.B.C. standard" are also listed in Chapter 35, Part II, and are part of this code.

1. U.B.C. Standard 4–1, Proscenium Curtains

2. U.B.C. Standard 9–1, Installation of Sprinkler Systems

3. U.B.C. Standard 8–1, Test Method for Surface–burning Characteristics of Building Materials

4. U.B.C. Standard 7–1, Fire Tests of Building Construction and Materials

405.1.2 Definitions. For the purpose of this chapter, certain terms are defined as follows:

BATTEN is a flown metal pipe or shape on which lights or scenery are fastened.

DROP is a large piece of scenic canvas or cloth which hangs vertically, usually across the stage area.

FLY is the space over the stage of a theater where scenery and equipment can be hung out of view. Also called lofts and rigging lofts.

FLY GALLERY is a ((~~raised floor area~~)) catwalk above a stage from which the movement of scenery and operation of other stage effects are controlled.

GRIDIRON is the structural framing over a stage supporting equipment for hanging or flying scenery and other stage effects. A gridiron grating is not to be considered a floor.

LEG DROP is a long narrow strip of fabric used for masking. When used on either or both sides of the acting area, it is provided to designate an entry onto the stage by the actors. It is also used to mask the side stage area. They may also be called "wings."

PINRAIL is a rail on or above a stage ((~~through~~)) which has belaying pins ((~~are inserted and~~)) to which lines are fastened.

PLATFORM is that raised area within a building used for the presentation of music, plays or other entertainment; the head table for special guests; the raised area for lectures and speakers; boxing and wrestling rings; theater in the round; and similar purposes wherein there are not overhead hanging curtains, drops, scenery or stage effects other than lighting.

PLATFORM, PERMANENT, is a platform used within an area for more than 30 days.

PLATFORM, TEMPORARY, is a platform used within an area for not more than 30 days.

PROSCENIUM WALL is the wall that separates the stage from the auditorium or house.

STAGE is a space within a building used for entertainment or presentations, with a stage height of 50 feet (15 240 mm) or less. Curtains, drops, scenery, lighting devices and other stage effects are hung and not retractable except for a single lighting bank; single main curtain, border and legs; and single backdrop.

STAGE AREAS are the entire performance area and adjacent backstage and support areas not separated from the performance area by fire–resistive construction.

STAGE HEIGHT is the dimension between the lowest point on the stage floor surface and the highest point of the underside of the roof or floor deck above the stage.

STAGE, LEGITIMATE, is a stage wherein curtains, drops, leg drops, scenery, lighting devices or other stage effects are retractable horizontally or suspended overhead and the stage height is greater than 50 feet (15 240 mm).

THEATER–IN–THE–ROUND is an acting area in the middle of a room with the audience sitting all around it.

405.1.3 Materials and design. Materials used in the construction of platforms and stages shall conform to the applicable materials and design requirements as set forth in this code. All assumed design live loads shall be indicated on the construction documents submitted for approval.

Section 68. Section 408 of the 1994 Uniform Building Code is amended as follows:

SECTION 408 — AMUSEMENT BUILDINGS

408.1 General. Amusement buildings having an occupant load of 50 or more shall comply with the requirements for the appropriate Group A Occupancy and this section. Amusement buildings having an occupant load of less than 50 shall comply with the requirements for a Group B Occupancy and this section.

EXCEPTION: Amusement buildings or portions thereof which are without walls or a roof and constructed to prevent the accumulation of smoke in assembly areas.

For flammable decorative materials, see the Fire Code.

408.2 Definition. For the purposes of this code the following definition applies:

AMUSEMENT BUILDING is a building or portion thereof, temporary or permanent, used for entertainment or educational purposes and which contains a system which transports passengers or provides a walkway through a course so arranged that the required exits are not apparent due to theatrical distractions, are disguised or not readily available due to the method of transportation through the building or structure.

Permanent amusement building is any amusement building not otherwise classified as portable or temporary.

Portable amusement structure is an amusement building designed and constructed to be portable to be erected and used on a short term basis at each location.

Temporary amusement building is an amusement building used for that purpose for a period of 6 weeks or less in any given twelve months.

408.3 Exit and Exit Signs. Exits and exit signs for amusement buildings shall be approved by the building official and, where practical, shall comply with the requirements specified in Chapter 10. For exit marking, see Section 1013.6.

408.4 Automatic Fire–extinguishing Systems. An automatic fire–extinguishing system shall be installed in amusement buildings as set forth in Section 904.2.3.6.

408.5 Alarm Systems.

408.5.1 General. An approved smoke–detection system installed in accordance with the Fire Code shall be provided in amusement buildings.

EXCEPTION: In areas where ambient conditions will cause a smoke–detector system to alarm, an approved alternate type of automatic detector shall be installed.

408.5.2 Alarm system. Activation of any single smoke detector, the automatic sprinkler system or other automatic fire–detection device shall immediately sound an alarm in the building at a constantly supervised location from which the manual operation of systems noted in Section 408.5.3, Items 1, 2 and 3, may be initiated.

408.5.3 System response. In other than temporary amusement buildings, t((~~T~~))he activation of two or more smoke detectors, a single smoke detector monitored by an alarm verification zone, the automatic sprinkler system or other approved automatic fire–detection device shall automatically:

1. Stop ((~~confusing~~)) sounds and visual effects, and

2. Activate an approved directional exit marking, and

3. Cause illumination of the exit path with light of not less than 1 footcandle at the walking surface.

408.5.4 Public address system. A public address system which is audible throughout the amusement building shall be provided in all portable and permanent amusement buildings. The ((~~public address~~)) fire alarm system may also serve as ((~~an alarm~~)) a public address system.

Section 69. Section 409.8 of the 1994 Uniform Building Code is amended as follows:

409.8 Pedestrian Walkways over Public Streets. Pedestrian walkways over public streets shall be subject to the ((~~approval of local jurisdictions~~)) Street Use Ordinance, Title 15, Seattle Municipal Code.

Section 70. Section 412 of the 1994 Uniform Building Code is amended as follows:

((~~Section 412 — AVIATION CONTROL TOWERS~~

~~Where applicable (see Section 101.3) for aviation control towers, see Appendix Chapter 4, Division II.~~))

Section 412 — FLOATING HOMES

412.1 Definitions. Certain words and terms used in this chapter, unless clearly inconsistent with their context, shall be defined as follows:

FLOATING HOME is a building constructed on a float used in whole or in part for human habitation as a single-family dwelling which is moored, anchored or otherwise secured in waters.

FLOATING HOME MOORAGE is a waterfront facility for the moorage of one or more floating homes and the land and water premises on which such facility is located.

FLOATING HOME SITE is a part of a floating home moorage, located over water, and designed to accommodate one floating home.

GARBAGE is all discarded putrescible waste matter, including small dead animals weighing not over 15 pounds (6.8kg), but not including sewage or human or animal excrement.

SEWAGE is all water-carried waste discharged from the sanitary facilities of buildings occupied or used by people.

412.2 Moorage Location. Every floating home moorage shall be located on privately-owned or privately-controlled premises in accordance with the Land Use Code.

412.3 Land Access. Every floating home moorage shall have not less than 20 feet (6096 mm) of land frontage abutting a public street sufficiently improved for automobile travel.

412.4 Moorage Walkways. Every floating home moorage shall have firm and substantial walkways with a net width of not less than 4 feet (1219 mm) and extending from land to every floating home site in such moorage.

412.5 Moorage Lighting. Every floating home moorage and the walkways to every floating home site shall be illuminated by lights designed, constructed and maintained to provide a minimum average illumination on said walkways of five footcandles (54 lux) of light intensity. The lowest footcandle value at any point on said walkways shall not be less than one-half the average value.

412.6 Fire Protection. Floating home moorages shall be provided with fire extinguishing equipment as follows:

1. **Portable Fire-Protection Equipment.** One fire extinguisher, 2A, 20-B:C rating minimum, shall be provided in each required hose station. The fire chief shall designate the type and number of all other fire appliances to be installed and maintained in each floating home moorage.

2. **Standpipes.** All portions of floats exceeding 250 feet (76 500 mm) in distance from fire apparatus access and marine service stations shall be provided with an approved wet standpipe system installed in conformity with applicable standards set forth in U.B.C. Standard 9-2 and the Fire Code Appendix II-C.

2.1. Hose stations shall be spaced to provide protection to any portion of floats, floating homes or floating vessels. Hoses shall be mounted on a reel or rack and enclosed within an approved cabinet. Hose stations shall be labeled FIRE HOSE-EMERGENCY USE ONLY. All equipment shall meet the approval of the fire chief.

2.2. At the shore end, the waterline shall be equipped with a single 2-1/2 inch (64 mm) fire department connection.

2.3. Waterlines shall normally be dry where the area is subject to freezing temperatures.

412.7 Water Service Connections. Every floating home moorage shall have a lawfully-installed water service connection and shall provide water service piping securely fastened and stabilized above water from such water service connection to an outlet connection at each floating home site on a floating home moorage. The water piping in every floating home in a floating home moorage shall be connected to the water service outlet serving such floating home and such connection shall be securely fastened and stabilized above high water line. Water service connections and water service piping shall be constructed, installed and maintained in accordance with applicable standards established by or pursuant to ordinances.

412.8 Public Sewer Connection. Every floating home moorage any part of which is within 300 feet (91 440 mm) of a public sewer and every floating home moorage on Shilshole Bay, Salmon Bay, Lake Washington Ship Canal, Lake Union, Portage Bay, Union Bay and that portion of Lake Washington lying within the City limits of Seattle shall have a lawfully-installed connection to a public sewer.

412.9 Local Side Sewer System. Every floating home moorage within the limits specified in Section 412.8 shall provide a local side sewer system for the collection of sewage from every floating home in such moorage. Such local side sewer system shall be connected to the public sewer, shall have an inlet connection at each floating home site and shall be constructed, installed and maintained in accordance with this and all other applicable ordinances regulating the construction, alteration, repair and connection of side sewers.

412.10 Connection to Local Side Sewer System. Every floating home in a floating home moorage which is required under Section 412.8 to be connected to a public sewer shall be connected to the local side sewer system and no owner or operator of such a floating home moorage shall permit to be moored at such moorage under his/her control any floating home which is not connected to the local side sewer system. It is unlawful for any

person to use, occupy or let any floating home for human habitation within the limits specified in Section 412.8 unless the same is connected to the sewer system.

A reconnection permit shall be required for any floating home which is relocated from its original site of connection to a local side sewer system and such reconnection shall be subject to the approval of the Director of Engineering as to compliance with this chapter.

412.11 Sewer Installation Fees. The fee for the installation of any side sewer serving a floating home moorage shall be the fee provided by law for the connection to the public sewer of side sewers serving mobile home parks.

412.12 Plumbing Systems. All plumbing and plumbing systems in every floating home shall meet the requirements of the Seattle Plumbing Code except as otherwise approved by the Director of Public Health in accordance with the Plumbing Code.

412.13 Garbage Disposal. Every floating home moorage shall be provided with adequate garbage storage and collection facilities which shall be located in an accessible place on the moorage site and no garbage or refuse shall be thrown or dumped into the waters.

412.14 Electrical Service and Wiring. Electrical service to floating homes and floating home moorages shall be provided as approved by the City Light Department. Electrical wiring and equipment in every floating home shall conform to requirements of the Electrical Code as set forth for residential occupancies. No floating home shall be permitted to connect or reconnect to the electric utility's distribution system unless approved for such connection by the building official in accordance with the Electrical Code.

412.15 New Construction. All new construction of floating homes or major alterations thereto and all floating homes moved into city waters, excluding the structural members used for flotation, shall conform to the requirements for dwellings as set forth in this code and all other applicable codes and ordinances regulating the design, construction, use and occupancy of such buildings and the required installations therein.

412.16 Housing Standards for Existing Floating Homes. Every floating home shall comply with the minimum housing standards as set forth in the Seattle Housing and Building Maintenance Code except as otherwise approved by the building official in accordance with the Housing and Building Maintenance Code.

412.17. Property Lines. The boundaries of floating home moorage sites shall be considered the property line for determining compliance with Section 503.

Interpretation I412.17: For the purposes of determining the required wall and opening protection and roof-covering requirements, distance shall be measured to the exterior wall of the home, and not to the float.

412.18 Approval Of Moorage Site Plan Required. Every floating home moorage shall continuously conform to a moorage site plan which has been approved by the building official. Such approval shall be obtained as follows: Three copies of the site plan, drawn to scale and completely dimensioned, and setting forth the address and legal description of the property on which the moorage is located and the name and address of the owner or operator of the moorage, shall be filed with the building official.

The moorage site plan shall show:

1. The dimensions of the floating home moorage site;

2. The location of abutting public waterways;

3. The location and dimensions of private waterways and land access to the moorage;

4. The location and identification of individual floating home sites;

5. The location and dimensions of off-street parking spaces;

6. The location and dimensions of walkways and any accessory structures or facilities;

7. The water service system;

8. The local side sewer system; and

9. The electrical service and lighting system.

Such site plan shall be examined by the building official, the fire chief, the director of public health, the superintendent of water, and by the director of engineering, to each of whom the building official shall refer such plan. Upon approval of a floating home moorage site plan by the fire chief, the director of public health, the superintendent of water and the director of engineering as to compliance with laws and ordinances under their respective jurisdictions, and upon being satisfied that the plan conforms to the requirements of this code and other applicable ordinances and is otherwise lawful, the building official shall approve such plan. One copy of the approved site plan shall be retained in the office of the building official, one copy in the office of the director of public health, and one copy, which shall be maintained on the premises of the floating home moorage, shall be returned to the owner or operator.

412.19 Moorage Register of Ownership. Every owner or operator of a floating home moorage shall maintain a current register of every floating home moored on the premises, such register to record the name and address of the legal owner of each floating home and the registration number assigned to it by the King County Assessor. A copy of said register shall be made available upon request to any City department head referred to in this chapter or to his/her representative.

Section 71. Section 413 of the 1994 Uniform Building Code is amended as follows:

((~~Section 413 — DETENTION AND CORRECTION FACILITIES~~

~~Where applicable (see Section 101.3) for detention and correction facilities, see Appendix Chapter 3, Division I.~~))

Section 413 — WATERFRONT STRUCTURES: PIERS, WHARVES AND BUILDINGS

413.1 General.

413.1.1 Scope. Waterfront structures shall be subject to all of the requirements of this code relating to other structures except as limited by, added to, or otherwise specified in this chapter. Unless otherwise specified, all wood dimensions are nominal size as defined in Section 2302.

For occupancy separations, see Table 3-B.

EXCEPTION: Fire-resistive walls as specified in Section 413.6.6 may be used as one-hour fire-resistive occupancy separations and as a separation between Group H, Division 4 and Group A, Division 2, 2.1, 3 or 4 Occupancies, including the specified opening protection in buildings of Types II-N, IV and V-N construction.

413.1.2 Definitions. For the purposes of this chapter, certain terms are defined as follows:

COVERED BOAT MOORAGE is a pier or system of floating or fixed accessways to which vessels on water may be secured, 50 percent or more of which is covered by a roof.

DOCK is a natural open or artificially closed basin in which vessels may remain afloat when berthed at a wharf or pier.

PIER is a structure, usually of greater length than width, of timber, stone, concrete or other material, having a deck and projecting from the shore into waters so that vessels may be moored alongside for loading, unloading, storage, repairs or commercial uses.

SUBSTRUCTURE is that portion of the construction below and including the deck.

SUPERSTRUCTURE is that portion of construction above the deck.

WATERFRONT STRUCTURE is a structure with at least 20 percent or 8,000 square feet (743 m^2), whichever is greater, of its area over water.

WHARF OR QUAY is a structure of timber, stone, concrete or other material having a platform built along and parallel to waters so that vessels may be moored alongside for loading, unloading, storage, repair or commercial uses.

413.2 Allowable Area and Height for Waterfront Structures. The height of structures to be built over water shall be measured from the elevation of ordinary high water as provided in Title 23 of the Seattle Municipal Code Sections 23.60.952 and 23.60.930 for Shoreline Districts. Height and area shall comply with the requirements of Table 5-B, except that the increases allowed in Section 505.2 are not applicable to waterfront structures.

EXCEPTIONS: 1. In covered boat moorages, the areas in Table 5-B may be increased not more than 400 percent when an approved automatic sprinkler system is provided throughout.

2. Each covered area of a boat moorage may be considered as a separate building subject to the following conditions:

2.1. Maximum individual areas shall be 8,000 square feet (743 m^2). The maximum width of connecting walkways shall be 10 feet (3048 mm).

2.2. Walkways, finger piers and other decked areas shall not exceed 30 percent of the area of the roof that extends over water.

2.3. Covered areas shall be separated by not less than 16 feet (4877 mm). The intervening areas may be used for moorage provided the adjacent covered areas comply with Item 2.4 below.

2.4. Covered roof areas constructed in such manner that would trap smoke or hot gases shall be provided with the following:

2.4.1 Vents or monitors of not less than 5 percent of the roof area.

2.4.2 A draft stop of splined or tongue-and-groove planking not less than 1 inch (25 mm) in thickness, 1/2-inch (13 mm) exterior-type plywood or 26 gauge steel shall extend across the end of each roof area when such roof is closer than 30 feet (9144 mm) to an adjacent building. The draft stop shall extend to not less than 24 inches (610 mm) below the lower edge of the roof. A draft stop constructed in accordance with Section 413.5 shall be provided under the walkway at each location where draft stops are required at the end of roofed areas.

413.3 Accessory Uses. Uses accessory to the principal occupancy shall be permitted, provided they are conducted in an area separated from the moorage area by not less than 16 feet (4877 mm) and the exposed side of the moorage area is protected by a one-hour fire-resistive occupancy separation as specified in Section 413.1 extending 2-1/2 feet (762 mm) above the roof line. One-story superstructures shall be permitted for accessory uses but shall not exceed 1,000 square feet (93 m^2) in area nor 20 feet (6096 mm) in height.

EXCEPTION: Storage shall be allowed in the moorage area, provided it conforms to the following:

(1) There may be one unprotected moorage equipment locker of not more than 150 cubic feet (115 m^3) for each slip.

(2) Where groups of three or more lockers are provided, they shall be separated from each other with one-hour fire-resistive construction and openings in the separation shall have one-hour protection.

(3) Storage of flammable liquids shall be in accordance with NFPA Standard 31 and the Fire Code.

413.4 Location on Property. Exterior walls shall have fire resistance and opening protection as determined by Section 503.

EXCEPTIONS: 1. Fire resistive construction and opening protection required because of proximity to property lines may be omitted for waterfront structures which are located on the same property, separated by an unobstructed deck not less than 16 feet (4877 mm) wide, and which have a draft stop constructed according to Section 413.5.2 installed in the substructure between the buildings.

2. In covered boat moorages, exterior walls which are built entirely over water may be of tongue-and-groove or splined planks not less than 2 inches (51 mm) in thickness, covered with 26 gauge sheet metal, 3/8-inch (9.5 mm) exterior type plywood or equivalent on both sides, regardless of proximity to property lines. Walls at the substructure may be constructed as specified in Subsection 413.5.2 for draft stops. Where such walls (even though part of such covered boat moorage) are built on land, this exception shall not apply.

413.5 Substructure.

413.5.1 Construction. Substructures may be of any type of construction permitted in this code subject to the area limitations of Section 413.2, except that, when constructed of wood, the members shall not be less than the following in any dimension, exclusive of piling:

MEMBER	SIZE UNLIMITED USE × 25.4 for mm	PIERS FOR BOAT MOORAGE ONLY, NOT EXCEEDING 10 FEET (3048 mm) IN WIDTH × 25.4 for mm
Caps and girders	8"	6"
Joists, beams and other members	4"	3"

Flooring or deck	3" T & G or splined or 4" square edged	2"
Bracing	3"	2"

If the flooring or deck is under a roof or is used for parking, there shall be applied over the flooring or deck a tight-fitting wearing surface of softwood not less than 2 inches (51 mm) thick and not more than 6 inches (152 mm) wide, 1-inch (25 mm) thick hardwood, 2-inch (51 mm) thick asphaltic concrete or other material of equivalent fire resistance.

EXCEPTION: Covered piers used for moorage only need not have a wearing surface.

For types of softwoods, see U.B.C. Standard 23-1.

413.5.2 **Draft Stops.** Draft stops shall be installed in all substructures constructed of combustible materials, exclusive of piling and pile bracing. They shall be placed not more than 100 feet (2540 mm) apart measured along the main axis of the pier or wharf. They shall fit tightly around all joists, beams, etc., and extend from the underside of the deck to city datum if over salt water or to low water if over fresh water. See Section 413.6.7 for draft stops in superstructures.

Substructure draft stops shall be constructed of at least two layers of lumber not less than 2 inches (51 mm) in thickness laid with broken joints or materials of equal fire resistance.

413.5.3 **Automatic Sprinklers.** Automatic sprinklers shall be installed under the substructure of every new waterfront structure and as specified in Chapter 9.

EXCEPTIONS: 1. Combustible substructures whose deck area does not exceed 8,000 square feet (743.2 m^2) supporting no superstructures.

2. Combustible substructures whose deck area does not exceed 8,000 square feet (743.2 m^2) supporting superstructures not required to be provided with an approved automatic sprinkler system as specified in Section 413.6.9.

3. Noncombustible substructures with or without superstructures.

4. Substructures, over other than tidal water, where sprinkler heads cannot be installed with a minimum clearance of 4 feet (1219 mm) above mean high water.

5. Substructures resulting from walkways or finger piers which do not exceed 10 feet (3048 mm) in width.

413.6 **Superstructure.**

413.6.1 **Construction.** Superstructures may be of any type of construction permitted by this code subject to the height and area limitations of Section 413.2 and the requirements of this section.

413.6.2 **Floors.** See Section 413.5.

413.6.3 **Exterior Walls.** Exterior walls of Types II-N, II One-hour, III, IV and V buildings, when not subject to the requirements of Section 413.4 because of their proximity to property lines, may be constructed of matched or lapped lumber not less than 2 inches (51 mm) thick and not more than 6 inches (153 mm) wide, or not less than 1 inch (25 mm) thick with a weather covering of noncombustible material applied directly to the wood. Fire blocks shall be required as specified in Section 708. Openings in exterior walls shall be protected by a fire assembly having a three-fourths-hour fire- protection rating when fire-resistive openings are required by Sections 503.2 and 1010.4.

413.6.4 **Roof Coverings.** Roof coverings shall be fire-retardant as specified in Chapter 15.

413.6.5 **Roof Construction.** In Type IV buildings the roof may be constructed of corrugated galvanized steel attached directly to wood or steel purlins in lieu of that specified in Section 605.6.

413.6.6 **Fire-resistive Walls.** In Types II-N, II One-hour, III, IV and V buildings, there shall be at least one fire-resistive wall from the deck to at least 3 feet (914 mm) above the roof for each 500 feet (152 m) of length. Areas greater than 100,000 square feet (9290 m^2) shall be divided with such fire-resistive walls. There shall be a draft stop constructed as specified in Section 413.5.2, installed in the substructure immediately below every required fire-resistive wall when the deck is of combustible materials.

Fire-resistive walls shall be constructed as required for two-hour fire-resistive walls or may consist of at least 2 layers of tongue-and-groove or splined lumber, not less than 2 inches (51 mm) thick and not more than 6 inches

(153 mm) wide, with a sheet of not less than No. 26 gauge galvanized steel or 3/8-inch (3.2 mm) exterior type plywood between the two layers, placed vertically with broken joints, or equivalent fire-resistive construction.

Openings in fire-resistive walls shall be protected by a fire assembly having a one and one-half hour fire protection rating.

413.6.7 Draft Stops. Superstructure draft stops shall be installed as specified in Section 708. Substructure draft stops constructed as specified in Section 413.5.2 shall be installed in line with the superstructure draft stops above.

413.6.8 Stairs and Exits. Stairs and exits shall be provided as specified in Chapter 10.

EXCEPTIONS: 1. Where two exits are required from an occupancy, the two exits shall not terminate on the same open deck.

2. An open deck may be considered an exit court and shall not be less than 10 feet (3048 mm) in width.

3. In Group A, Division 2, 2.1, 3 and 4 Occupancies, the maximum distance of travel shall not be more than 75 percent of that specified in Section 1003.4.

4. Boat moorages which have no sales, service or repair facilities may have a single exit not less than 3 feet (914 mm) wide and shall be exempt from the requirements of Section 1003.4 if a Class I standpipe is provided as specified in Section 413.8.

413.6.9 Automatic Sprinklers. Automatic sprinklers shall be provided as specified in Chapter 9.

EXCEPTIONS: 1. Outside of the fire district, an automatic sprinkler system shall not be required in superstructures which are less than 8,000 square feet (743.2 m^2) in floor area or in individual superstructures less than 8,000 square feet (743.2 m^2) in floor area when separated by a substructure of a width not less than 16 feet (4877 mm) and a substructure draft stop constructed as specified in Section 413.5.2.

2. An automatic sprinkler system shall not be required in one story superstructures which do not exceed 1,000 square feet (93 m^2) in floor area or 20 feet (6096 mm) in height.

3. An automatic sprinkler system shall not be required in Group R, Division 1 Occupancies or Group B office buildings of Type I construction, provided no one assembly room exceeds 1,000 square feet (93 m^2) in floor area and the entire substructure is of Type I construction, unless otherwise required by Section 403.

413.7 Width of Piers. Floats, piers and walkways shall provide an aisle not less than 3 feet 6 inches (1067 mm) in width for the purpose of fire department access.

EXCEPTION: Floats, piers and walkways which are less than 40 feet (12 192 mm) in length and which are not open to the public.

413.8 Travel Distance. When the distance of exit travel exceeds 300 feet (91 440 mm), an approved Class I standpipe shall be provided. A Siamese connection at the shore end and direct access for fire department pumping apparatus shall be provided.

Section 72. Section 414 of the 1994 Uniform Building Code is amended as follows:

((~~Section 414 — AGRICULTURAL BUILDINGS~~

~~Where applicable (see Section 101.3) for agricultural buildings, see Appendix Chapter 3, Division II.~~))

Section 414 —TRANSFORMER VAULTS

414.1 Scope. Vaults housing private transformers shall comply with the provisions of this chapter and Article 450 of the Seattle Electrical Code. The provisions of this chapter are minimum standards for private transformer vaults. Vaults containing utility transformers or equipment will be required to comply with additional requirements of Seattle City Light.

414.2 Definitions.

UTILITY TRANSFORMER VAULT. Utility transformer vaults are those which contain transformer equipment owned by Seattle City Light or other electric power utility.

PRIVATE TRANSFORMER VAULT. Private transformer vaults are those which contain transformer equipment that is not owned by Seattle City Light or other electric power utility.

414.3 When Required.

414.3.1. Utility Transformers. Transformer vaults shall be required for all utility transformers located inside a building. Seattle City Light shall approve the size, location, and layout of all utility vaults. See Appendix Chapter 4 for requirements.

414.3.2 Private Transformers. Transformer vaults shall be required for all oil-insulated private transformers. Vaults shall be required for other private transformers rated over 35,000 volts which are located inside a building.

EXCEPTION: Vaults need not be provided for certain oil-insulated private transformers in accordance with Article 450 of the Seattle Electrical Code.

414.4 Access to Private Transformer Vaults. At least one accessible opening, which may be a door or ventilation opening, shall be provided to every vault. The opening shall be adequate in size to permit the installation and removal of the equipment located in the vault, and shall be kept unobstructed at all times. An unobstructed level area shall be provided at the entrance to all vaults. The level area shall be large enough to allow for removal of the transformer.

414.5 Location. Private transformer vaults shall be located where they can be ventilated to the outside air without using flues or ducts wherever such an arrangement is practicable.

414.6 Construction. All private transformer vaults shall be of at least three-hour fire-resistive construction. The floors of private transformer vaults in contact with the earth shall be of concrete not less than four inches thick.

EXCEPTIONS: 1. Subject to the approval of the building official, where the total capacity of private oil-insulated transformers does not exceed 112-1/2 kVA, vaults may be constructed of reinforced concrete not less than 4 inches (102 mm) thick.

2. Subject to the approval of the building official, private transformer vaults may be constructed of one-hour fire-resistive construction where the transformer is protected with an automatic sprinkler, water spray, carbon dioxide, or halon fire extinguishing system.

414.7 Openings into Private Transformer Vaults.

414.7.1 Protection of Openings. All doorways opening into a transformer vault from the building interior shall be protected by a fire assembly having a fire-protection rating equal to that required for the vault. Exterior openings, other than doors and ventilation openings, shall be protected by fire assemblies having a three-fourths-hour fire-protection rating when located below openings in another story or when located less than 10 feet (3048 mm) from other doors or windows of the same buildings.

414.7.2 Locks. All doors shall be equipped with locks and shall be kept locked. Personnel doors shall be equipped with panic bars, pressure plates, or other devices that are normally latched but open under simple pressure.

414.7.3 Doorways. A removable curb 4 inches (103 mm) high, or as high as necessary to contain oil, shall be installed below each door. All doors shall be made of steel and shall swing out of the vault 180 degrees. Equipment access doorways to vaults containing single-phase transformers shall have clear openings of at least 42 inches (1067 mm) wide and 6 feet 8 inches (2057 mm) high. Doorways for personnel access shall have clear openings of at least 36 inches (914 mm) wide and 6 feet 8 inches (2057 mm) high.

414.8 Ventilation Systems for Private Transformer Vaults.

414.8.1 General. Ventilation systems shall be provided to dispose of heat from transformer total losses without creating a temperature rise which is in excess of the transformer rating.

414.8.2 Method of Ventilation. Ventilation shall be provided by either natural circulation or mechanical circulation.

414.8.2.1 Natural Circulation. The combined minimum net intake and exhaust area, exclusive of area occupied by screens, grating or louvers, shall not be less than 3 square inches (1935 mm^2) per kVA of transformer capacity. The total required area shall be divided roughly equally between intake and exhaust. In no case shall either the intake or exhaust area be less than 72 square inches (46 452 mm^2).

414.8.2.2 Mechanical Circulation. Positive or negative pressure ventilation systems shall supply a minimum of 1.6 cfm (.76 L/s) of air per kVA of transformer capacity. The fans shall be installed outside of the vault and shall be controlled by a thermostat located inside the vault. The intake shall be located in the lower one-half of an exterior walls of the vault and the exhaust shall be in the roof or ceiling of the vault or in the upper one-half of the sidewalls of the vault. The ventilation system shall cause air to flow longitudinally across the transformers.

414.8.3 Ventilation Openings and Duct Terminations. Ventilation openings and duct terminations shall comply with the following:

1. **Location of exhaust ventilation openings and exhaust duct terminations.** Unless otherwise approved by the building official, exhaust ventilation openings and duct terminations shall be located not less than 10 feet (3048 mm) from fire escapes, required exits, combustible materials and unprotected openings. Exhaust outlets shall be located on the exterior of the building.

2. **Covering.** Ventilation openings shall be covered with durable metal gratings, screens or louvers.

3. **Opening protection.** Intake ventilation openings in the vault walls on the interior of the building shall be protected by automatic closing fire dampers having a fire-resistance rating at least equal to that required for the vault. The actuating device on the fire damper should be made to function at a temperature of 165 degrees F (92 degrees C).

4. **Ventilation ducts.** Exhaust ventilation ducts, if used, shall be enclosed in construction having a fire-resistance rating at least equal to that required for the vault. Exhaust ducts shall extend from the vault to the outside of the building. An exhaust duct for a mechanically ventilated vault shall be used exclusively for ventilating the vault. No fire dampers shall be installed in exhaust ventilation ducts.

414.9 Drainage For Private Transformer Vaults.

414.9.1 General. Drains shall be prohibited in all transformer vaults.

414.9.2 Sumps. Vaults shall have a dry sump. All sumps shall have an opening of at least 12 inches (305 mm) diameter with a removable metal grate that is flush with the floor. The sump shall be located near the personnel door, out of the entry path. The vault floor shall slope at least one inch in ten feet toward the sump.

Sumps in private vaults shall have at least 8 cubic foot (.23 m^3) capacity.

414.10 Pipes and Ducts in Private Transformer Vaults. No pipes or ducts foreign to the electrical installation shall enter or pass through any transformer vault. Piping or other facilities provided for fire protection inside the vault or for transformer cooling are deemed not to be foreign to the electrical installation.

414.11 Storage in Private Transformer Vaults. No material shall be stored in any transformer vault.

Section 73. The 1994 Uniform Building Code is amended by deleting Sections 415, 416, 417 and 418.

Section 74. Chapter 5 of the 1994 Uniform Building Code is amended as follows:

Chapter 5
GENERAL BUILDING LIMITATIONS

Section 501 — SCOPE

Buildings and structures shall comply with the location on property, area, height and other provisions of this chapter.

For additional limitations or allowances for special uses or occupancies, see the following:

SECTION	SUBJECT
402	Atria
403	High-rise ((~~office~~)) buildings ((~~and Group R, Division 1 Occupancies~~))
404	Malls
311.9	Open parking structures
307	Group H, Division 6 Occupancies
((~~412~~	~~Aviation control towers~~
~~414~~	~~Agricultural buildings~~
~~3111~~	~~Membrane structures~~))

Section 502 — PREMISES IDENTIFICATION

((~~Approved numbers or addresses shall be provided for all new buildings in such a position as to be plainly visible and legible from the street or road fronting the property.~~))

502.1 Enforcement by Building Official - Owners to Affix and Maintain Building Numbers. The building official shall determine the address of any property in the City in accordance with the numbering system established in this Chapter.

Whenever the irregularity of plats, the changing direction of streets, avenues, or other highways, the interruption of the continuity of highways or any other condition causes doubt or difference of opinion as to the correct number of any piece of property or any building thereon, the number shall be determined by the building official. He/she shall be guided by the specific provisions of this chapter as far as they are applicable and when not applicable by such rules as may be established to carry out the intent of this chapter.

The owner of any building or other structure shall maintain the street number of each building and structure in a conspicuous place over or near the principal street entrance or entrances, or in other conspicuous places as is necessary for the easy locating of such address.

> EXCEPTION: Where there are multiple buildings on a site, the building official may waive the requirement for posting an address on appurtenant or accessory buildings where individual identification of each building is not essential.

Where a property has frontage along more than one named street or for any other property where there may be confusion regarding the address of a building or structure, the building official may require the complete address, including street number and street name to be conspicuously posted.

Numbers and letters shall be easily legible and shall not be less than 3 inches (76 mm) in height for dwellings and apartments and not less than 5 inches (127 mm) in height for all other occupancies. Numbers shall have a high contrast with the color of the building or other structure upon which they are posted.

Buildings served by a private road or a common driveway shall post their address number(s) at the head of the road or driveway in a manner that can be easily read from the intersecting street. Where the existing street grid may not adequately allow for the assignment of street addresses which will promote the easy locating of such addresses, or for any other reason consistent with the intent of this chapter, the building official may assign a name to the private road or common driveway which shall be used for addressing purposes. In addition, one or more property owners along the road or driveway may be required to post a sign displaying the assigned name at a location near the intersection of the road or driveway with a named public street.

Should the building official find that any building, structure or premises are not provided with numbers as herein required, or are not correctly numbered, he/she shall notify the owner, agent or tenant of the correct street number and shall require that the same shall be properly placed, in accordance with the provisions of this chapter, within a reasonable length of time. It is unlawful for any person to fail to comply with such notice.

502.2 Numbering System Prescribed. The numerical designation of all doorways and entrances to buildings, lots, yards and grounds fronting upon the several ways, avenues, streets, drives, places and squares of the City are established in accordance with the following system:

Except where otherwise specified, 100 numbers are allotted to each block; one whole number is allotted to each 20 feet (6096 mm) of frontage in each block; even numbers shall be used on the northerly side of streets or ways extending in an easterly and westerly direction and on the easterly side of avenues or ways extending in a northerly and southerly direction; odd numbers shall be used on the southerly side of streets or ways extending in an easterly and westerly direction and on the westerly side of avenues or ways extending in a northerly and southerly direction.

In the case of irregular drives, places, streets, ways or avenues, the frontages shall be numbered as near as may be according to the uniform series of block numbers with which they most nearly correspond.

502.3 Numbering of Buildings

502.3.1 Numbering of Buildings Downtown. Between Yesler Way and Denny Way all frontages upon avenues west of Broadway, East Union Street, Minor Avenue and Melrose Avenue shall be numbered as follows:

Yesler Way to Fir Street number 100 and upwards, Fir Street to Spruce Street number 150 and upwards, Spruce Street to Alder Street number 200 and upwards, continuing by consecutive hundreds to Pine Street; Pine Street to Olive Street number 1600 and upwards, Olive Street to Howell Street number 1700 and upwards, Howell Street to Stewart Street number 1800 and upwards, Stewart Street to Virginia Street number 1900 and upwards, continuing by consecutive hundreds to Denny Way.

Between Yesler Way and Denny Way all frontages upon avenues east of Broadway, East Union Street, Minor Avenue and Melrose Avenue shall be numbered as follows:

Yesler Way to East Fir Street number 100 and upwards, East Fir Street to East Spruce Street number 150 and upwards, East Spruce Street to East Alder Street number 200 and upwards, continuing by consecutive hundreds to East Marion Street; East Marion Street to East Spring Street number 900 and upwards, East Spring Street to East Union Street number 1100 and upwards, East Union Street to East Pike Street number 1400 and upwards, continuing by consecutive hundreds to Denny Way.

Between Yesler Way and Denny Way all frontages upon ways and streets west of Broadway, East Union Street, Minor Avenue and Melrose Avenue shall be numbered as follows:

Westward from Elliott Avenue number 51 and downwards, Elliott Avenue to Western Avenue number 52 and upwards, Western Avenue to First Avenue number 76 and upwards, First Avenue to Second Avenue number 100 and upwards, continuing eastward to Broadway, East Union Street or Melrose Avenue by consecutive hundreds.

Between Yesler Way and East Denny Way all frontages upon ways and streets east of Broadway, East Union Street, Minor Avenue and Melrose Avenue shall be numbered as follows:

Melrose Avenue to Bellevue Avenue number 300 and upwards, Bellevue Avenue to Summit Avenue number 400 and upwards, continuing by consecutive hundreds to Broadway.

Broadway to Tenth Avenue number 900 and upwards, Tenth Avenue to Eleventh Avenue number 1000 and upwards, continuing by consecutive hundreds corresponding with the numbered series of avenues eastward to Lake Washington.

On Olive Way eastward from Melrose Avenue, the street numbers shall run upwards consecutively, eastward from the existing street numbers which are west of the Melrose Avenue intersection.

502.3.2 Numbering of Buildings South of Downtown and East of the East Waterway. South of Yesler Way the frontages upon the avenues shall be numbered as follows:

Yesler Way to South Washington Street number 100 and upwards, continuing by consecutive hundreds to South Orcas Street with blocks and streets on the east side of 1st Avenue South being taken as a controlling series for numbering purposes.

South of South Orcas Street, 51st Avenue South shall be taken as the controlling series to the southern City limits. Note: Between South Othello Street and South Barton, 51st Avenue South becomes Rainier Avenue South, which shall be used for the controlling series until 51st Avenue South separates from Rainier Avenue South and continues on southward.

On the Second Avenue Extension from Jackson Street to Yesler Way all frontages shall be numbered as follows:

From Jackson Street to Main Street number 200 and upwards, Main Street to Washington Street number 300 and upwards, Washington Street to Yesler Way number 400 and upwards.

South of Yesler Way the frontages upon ways and streets shall be numbered as follows:

Westward from First Avenue South to the Harbor Line or East Waterway number 99 and downwards, First Avenue South to Occidental Avenue number 100 and upwards, Occidental Avenue to Second Avenue South number 150 and upwards, Second Avenue South to Third Avenue South number 200 and upwards, continuing by consecutive hundreds to Sixth Avenue South; Sixth Avenue South to Maynard Avenue number 600 and upwards, Maynard Avenue to Seventh Avenue South number 650 and upwards, Seventh Avenue South to Eighth Avenue South number 700 and upwards, continuing eastward by consecutive hundreds corresponding with the numbered series of avenues to Lake Washington, provided, that on South Michigan Street from 5th Place South to Seventh Avenue South all frontages shall be numbered as follows:

From 5th Place South to 6th Avenue South numbers 550 to 570 inclusive, and from 6th Avenue South to 7th Avenue South numbers 600 to 624 inclusive;

and on South River Street from 5th Place South to 7th Avenue South all frontages shall be numbered as follows:

From 5th Place South to 6th Avenue South numbers 550 to 570 inclusive, and from 6th Avenue South to 7th Avenue South numbers 600 to 624 inclusive.

502.3.3 Numbering of Buildings Between Downtown and the Ship Canal. North of Denny Way (and East Denny Way) the frontages upon the avenues shall be numbered as follows:

Denny Way (and East Denny Way) to John Street (and East John Street) number 100 and upwards, continuing by consecutive hundreds to Galer Street (and East Galer Street), the blocks and streets on the east side of Queen Anne Avenue being taken as a controlling series for numbering purposes.

Galer Street (and East Galer Street) to Garfield Street (and East Garfield Street) number 1500 and upwards, continuing by consecutive hundreds to Smith Street (and Louisa Street), the blocks and streets along the east side of First Avenue North being taken as a controlling series for numbering purposes; Smith Street (and Louisa Street) to Raye and West Raye Street (and Roanoke Street) number 2500 and upwards, continuing by consecutive hundreds to Barrett Street, East Roanoke Street to Edgar Street number 2600 and upwards, continuing by consecutive hundreds north to Lake Union; the blocks and streets along Queen Anne Avenue shall be taken as a controlling series for numbering purposes.

West Barrett Street number 3000 and upwards, to West Grover Street number 3400 and upwards, continuing by consecutive hundreds to West Emerson Street; West Emerson Street to West Thurman Street number 3800 and upwards, continuing by consecutive hundreds based on the shortest series of blocks northward to Salmon Bay and Admiralty Inlet.

Between Queen Anne Avenue and Eastlake Avenue and Lake Union the frontages on the ways and streets shall be numbered as follows:

Queen Anne Avenue to First Avenue North number 1 and upwards, First Avenue North to Warren Avenue number 100 and upwards, Warren Avenue to Second Avenue North number 150 and upwards, Second Avenue North to Third Avenue North number 200 and upwards, continuing by consecutive hundreds corresponding to the numbered series of avenues with half hundreds in the case of Nob Hill, Taylor and Dexter Avenues, to Ninth Avenue North; Ninth Avenue North to Westlake Avenue number 900 and upwards, Westlake Avenue to Terry Avenue North number 950 and upwards, Terry Avenue North to Boren Avenue North number 1000 and upwards, Boren Avenue North to Fairview Avenue number 1100 and upwards, Fairview Avenue to Minor Avenue North number 1150 and upwards, Minor Avenue North to Pontius Avenue number 1200 and upwards, Pontius Avenue to Howard Avenue North and Yale Avenue North number 1250 and upwards, Howard Avenue North and Yale Avenue North to Eastlake Avenue number 1300 and upwards.

East of Eastlake Avenue and Lake Union and North of East Denny Way the frontages upon the ways and streets shall be numbered as follows:

Eastlake Avenue to Melrose Avenue North number 200 and upwards continuing by consecutive hundreds eastward to North Broadway; North Broadway to Tenth Avenue North number 900 and upwards, Tenth Avenue North to Federal Avenue number 1000 and upwards, Federal Avenue to Eleventh Avenue North number 1050 and upwards, Eleventh Avenue North to Twelfth Avenue North number 1100 and upwards, continuing eastward to Lake Washington by consecutive hundreds corresponding with the numbered series of avenues with half hundreds where an additional avenue intervenes between two consecutively numbered avenues.

West of Queen Anne Avenue the frontages upon ways and streets shall be numbered westward from Queen Anne Avenue, all numbers being prefixed by the letter W, as follows:

Queen Anne Avenue to First Avenue West number W 1 and upwards, First Avenue West to Second Avenue West number W 100 and upwards, continuing westward consecutive hundreds corresponding with the numbered avenues with half hundreds where an additional avenue intervenes between two consecutively numbered avenues.

502.3.4 Numbering Buildings North of Union Bay of Lake Washington, Lake Union, Salmon Bay and Lake Washington Canal. The plan for the numbering of frontages upon the various avenues, streets and other public places in that portion of the City of Seattle lying north of Union Bay of Lake Washington, Lake Union, Salmon Bay and Lake Washington Canal is established as follows:

The frontages upon the avenues and places which run in a general northerly and southerly direction, shall be numbered in accordance with the designations of the intersecting numbered streets, as follows: north from the southern-most line of the State Harbor Line abutting Gas Works Park, from 2900 upwards: from North Thirtieth Street, from 3000 upwards, from Fiftieth Street (or Northeast Fiftieth Street, or Northwest Fiftieth Street) from 5000 upwards; one hundred numbers being allowed for each block, except in cases where a named "place" intervenes between two consecutively numbered streets, and in such case 50 numbers shall be allowed for each block. Frontages on avenues and places shall number from 3400 upwards in the block commencing from North Thirty-fourth Street and running north; from 3500 upwards in the block north from North and Northwest Thirty-fifth Street and from 3600 upwards in the block north of North, Northwest and Northeast Thirty-sixth Street.

The frontages upon the streets and places which run in a general easterly and westerly direction, shall be numbered as follows:

West from First Avenue Northwest, commencing with 100, and continuing west in correspondence with the numbers of the avenues; 100 numbers being allowed for each block, except where an avenue or place intervenes between two consecutively numbered avenues, and in such case 50 numbers shall be allowed for each block.

East from First Avenue Northwest, commencing with 100 and continuing as follows: East from Palatine Avenue, 200 and upwards; from Greenwood Avenue, 300 and upwards; from Phinney Avenue, 400 and upwards; from Sunset Place, 450 and upwards; from Dayton Avenue, 500 and upwards; from Evanston Avenue, 600 and upwards; from Fremont Avenue, 700 and upwards; from Linden Avenue, 800 and upwards; from Aurora Avenue, 900 and upwards; from Winslow Place, 950 and upwards; from Whitman Avenue 1000 and upwards; from Albion Place, 1050 and upwards; from Woodland Park Avenue, 1100 and upwards; from Midvale Avenue, 1200 and upwards; from Stone Avenue, 1300 and upwards; from Interlake Avenue, 1400 and upwards; from Ashworth Avenue, 1500 and upwards; from Carr Place, 1550 and upwards; from Woodlawn Avenue, 1600 and upwards, from Densmore Avenue, 1700 and upwards; from Wallingford Avenue, 1800 and upwards; from Burke Avenue, 1900 and upwards; from Meridian Avenue, 2100 and upwards; from Bagley Avenue, 2200 and upwards; from Corliss Avenue, 2300 and upwards; from Sunnyside Avenue, 2400 and upwards; and from Eastern Avenue, 2500 and upwards.

East from First Avenue Northeast, commencing with 100, and continuing east in correspondence with the numbered avenues; 100 numbers being allowed for each block, except where an avenue or place intervenes between two consecutively numbered avenues, and in such case 50 numbers shall be allowed for each block.

502.3.5 Numbering Buildings on Harbor Island. The frontages upon avenues and places which run in a general northerly and southerly direction, shall be numbered as follows:

South of Southwest Massachusetts Street, commencing with 1700 and continuing south corresponding with the numbers of the intersecting streets to the southernmost edge of Harbor Island.

West of the East Waterway beginning with 1000 and continuing westward to the West Waterway.

502.3.6 Numbering Buildings West of the West Waterway and the Duwamish Waterway. The frontages upon avenues and places which run in a general northerly and southerly direction, shall be numbered as follows:

North of Southwest Andover Street, commencing with 3800 and continuing north in correspondence with the numbers of the intersecting streets to the Duwamish Head.

South of Southwest Andover Street, commencing with 4000 and continuing south in correspondence with the numbers of the intersecting streets to the south City limits.

The frontages upon streets and places which run in a general easterly and westerly direction, shall be numbered as follows:

West of California Avenue Southwest, commencing with 4300 and continuing westward in correspondence with the numbers of the intersecting avenues to Puget Sound, provided that Thirty-fifth Avenue Southwest shall control the series south of Southwest Holden Street.

East of California Avenue Southwest, commencing with 4200 and continuing eastward in correspondence with the numbers of the intersecting avenues to the Duwamish Waterway; provided that Thirty-fifth Avenue Southwest shall be taken as the controlling series south of Southwest Holden Street.

Section 503 — LOCATION ON PROPERTY

503.1 General. Buildings shall adjoin or have access to a public way or yard on not less than one side. Required yards shall be permanently maintained.

For the purpose of this section, the ((~~center line~~)) opposite side of an adjoining public way shall be considered an adjacent property line. (See also Section 1203.4 and see Section 503.4.5 for Group H Occupancies. See Section 1204 for location of eaves.)

Access driveways shall have a vertical clearance of not less than 14 feet (4267 mm) above the finished driveway surface. The fire chief may modify or waive the requirements of this paragraph and may approve alternate means of access for fire protection.

When fire protection facilities are to be installed by the developer, such facilities, including all surface access roads, shall be installed and made serviceable prior to and maintained during the time of construction.

503.2 Fire Resistance of Walls.

503.2.1 General. Exterior walls shall have fire resistance and opening protection as set forth in Table 5–A and in accordance with such additional provisions as are set forth in Chapter 6. Distance shall be measured at right angles from the property line. The above provisions shall not apply to walls at right angles to the property line.

Projections beyond the exterior wall shall comply with Section 705 and shall not extend beyond:

1. A point one third the distance to the property line from an assumed vertical plane located where fire–resistive protection of openings is first required due to location on property; or

2. More than 12 inches (305 mm) into areas where openings are prohibited.

Interpretation 1503.2a: The least restrictive of Items 1 and 2 shall apply.

Interpretation 1503.2b: Where Table 5-A does not include a requirement for protected openings, Item 1 above shall be a point one-third the distance to the property line from an assumed vertical plane located where openings are first prohibited.

503.2.2 Area of openings. When openings in exterior walls are required to be protected due to distance from property line, the sum of the area of such openings shall not exceed 50 percent of the total area of the wall in each story.

503.3 Buildings on Same Property and Buildings Containing Courts. For the purposes of determining the required wall and opening protection and roof–covering requirements, buildings on the same property and court walls of buildings over one story in height shall be assumed to have a property line between them.

EXCEPTION: In court walls where opening protection is required such protection may be omitted, provided (1) not more than two levels open into the court, (2) the aggregate area of the building including the court is within the allowable area and (3) the building is not classified as a Group I Occupancy.

When a new building is to be erected on the same property as an existing building, the location of the assumed property line with relation to the existing building shall be such that the exterior wall and opening protection of the existing building meet the criteria as set forth in Table 5–A and Chapter 6.

EXCEPTION: Two or more buildings on the same property may be considered as portions of one building if the aggregate area of such buildings is within the limits specified in Section 504 for a single building.

When the buildings so considered house different occupancies or are of different types of construction, the area shall be that allowed for the most restricted occupancy or construction.

503.4 Special Provisions and Exceptions to Table 5–A.

503.4.1 General. The provisions of this section are exceptions to, or special provisions of, the construction requirements of Table 5–A, Chapters 3 and 6.

503.4.2 One–story Groups B, F, M, ((~~and~~)) S <u>and U</u> Occupancies. In Groups B, F, M, ((~~and~~)) S <u>and U</u> Occupancies, a fire–resistive time period will not be required for an exterior wall of a one–story, Type II–N building, provided the floor area of the building does not exceed 1,000 square feet (93 m^2) and such wall is located not less than 5 feet (1524 mm) from a property line.

503.4.3 Fire–retardant–treated wood framing. In Types III and IV construction, approved fire–retardant–treated wood framing may be used within the assembly of exterior walls when Table 5–A allows a fire–resistive rating of two hours or less provided the required fire resistance is maintained and the exposed outer and inner faces of such walls are noncombustible.

503.4.4 Wood columns and arches. In Types III and IV construction, wood columns and arches conforming to heavy–timber sizes may be used externally when exterior walls are permitted to be unprotected, noncombustible construction or when one–hour fire–resistive noncombustible exterior walls are permitted.

503.4.5 Group H Occupancies—minimum distance to property lines. Regardless of any other provisions, Group H Occupancies shall be set back a minimum distance from property lines as set forth in Items 1 through 4 below. Distances shall be measured from the walls enclosing the occupancy to all property lines, including those on a public way.

1. Group H, Division 1 Occupancies. Not less than 75 feet (22 860 mm) and not less than required by Table 3–F.

2. Group H, Division 2 Occupancies. Not less than 30 feet (9144 mm) when the area of the occupancy exceeds 1,000 square feet (93 m^2) and it is not required to be located in a detached building.

3. Group H, Divisions 2 and 3 Occupancies. Not less than 50 feet (15 240 mm) when a detached building is required. See Table 3–F.

4. Group H, Divisions 2 and 3 Occupancies containing materials with explosive characteristics. Not less than the distances required by Table 3–F.

503.4.6 Group H, Division 1, 2 or 3 Occupancies—detached buildings. When a detached building is required by Table 3–G, there are no requirements for wall and opening protection based on location on property.

503.4.7 Group H, Division 4 Occupancies. Group H, Division 4 Occupancies having a floor area not exceeding 2,500 square feet (232 m^2) may have exterior bearing walls of not less than two–hour fire–resistive construction when less than 5 feet (1524 mm) from a property line, and not less than one hour when not less than 20 feet (6096 mm) to a property line.

503.4.8 Group U, Division 1 Occupancies. In Group U, Division 1 Occupancies, exterior walls that are required to be of one–hour fire–resistive construction due to location on property may be protected only on the exterior side with materials approved for one–hour fire–resistive construction. See Section 503.

503.4.9 Exterior wall assemblies. Exterior wall assemblies complying with Section 2602.5.2 may be used in all types of construction.

Section 504 — ALLOWABLE FLOOR AREAS

504.1 One–story Areas. The area of a one–story building shall not exceed the limits set forth in Table 5–B except as provided in Section 505, nor the limits in Section 511.

504.2 Areas of Buildings over One Story. The total combined floor area for multistory buildings may be twice that permitted by Table 5–B for one–story buildings, and the floor area of any single story shall not exceed that permitted for a one–story building.

504.3 Allowable Floor Area of Mixed Occupancies. When a building houses more than one occupancy, the area of the building shall be such that the sum of the ratios of the actual area for each separate occupancy divided by the total allowable area for each separate occupancy shall not exceed one.

EXCEPTIONS: 1. The major occupancy classification of a building may be used to determine the allowable area of such building when the major use occupies not less than 90 percent of the area of any floor of the building and provided that other minor accessory uses shall not exceed the basic area permitted by Table 5–B for such minor uses and that various uses are separated as specified in Section 302.4.

2. Groups B, F, M and S and Group H, Division 5 Occupancies complying with the provisions of Section 505.2 may contain other occupancies provided that such occupancies do not occupy more than 10 percent of the area of any floor of a building, nor more than the basic area permitted in the occupancy by Table 5–B for such occupancy, and further provided that such occupancies are separated as specified in Section 302.4.

504.4 Mezzanines. Unless considered as a separate story, the floor area of all mezzanines shall be included in calculating the allowable floor area of the stories in which the mezzanines are located.

504.5 Basements. A basement need not be included in the total allowable area, provided such basement does not exceed the area permitted for a one–story building.

504.6 Area Separation Walls.

504.6.1 General. Each portion of a building separated by one or more area separation walls which comply with the provisions of this subsection may be considered a separate building, except as provided in Section 904.2.8. The extent and location of such area separation walls shall provide a complete separation.

When an area separation wall also separates occupancies that are required to be separated by an occupancy separation, the most restrictive requirements of each separation shall apply.

504.6.2 Fire resistance and openings. Area separation walls shall not be less than four–hour fire–resistive construction in Types I, II–F.R., III and IV buildings and two–hour fire–resistive construction in Types II One–hour, II–N or V buildings. The total width of all openings in such walls shall not exceed 25 percent of the length of the wall in each story. All openings shall be protected by a fire assembly having a three–hour fire–protection rating in four–hour fire–resistive walls and one– and one–half–hour fire–protection rating in two–hour fire–resistive walls. Penetrations shall be protected as required by Section 709.

504.6.3 Extensions beyond exterior walls. Area separation walls shall extend ((~~horizontally~~)) to the outer edges of horizontal projecting elements such as balconies, roof overhangs, canopies, marquees or architectural projections extending beyond the floor area as defined in Section 207.

EXCEPTIONS: 1. When horizontal projecting elements do not contain concealed spaces, the area separation wall may terminate at the exterior wall.

2. When the horizontal projecting elements contain concealed spaces, the area separation wall need only extend through the concealed space to the outer edges of the projecting elements.

In either Exception 1 or 2, the exterior walls and the projecting elements above shall not be of less than one–hour fire–resistive construction for a distance not less than the depth of the projecting elements on both sides of the area separation wall. Openings within such widths shall be protected by fire assemblies having a fire–protection rating of not less than three–fourths hour.

504.6.4 Terminating. Area separation walls shall extend vertically from the foundation to a point at least 30 inches (762 mm) above the roof.

EXCEPTIONS: 1. Any area separation wall may terminate at the underside of the roof sheathing, deck or slab, provided the roof–ceiling assembly is of at least two–hour fire–resistive construction.

2. Two–hour area separation walls may terminate at the underside of the roof sheathing, deck or slab, provided:

2.1 When the roof–ceiling framing elements are parallel to the walls, such framing and elements supporting such framing shall not be of less than one–hour fire–resistive construction for a width of not less than 5 feet (1524 mm) on each side of the wall.

2.2 When roof–ceiling framing elements are perpendicular to the wall, the entire span of such framing and elements supporting such framing shall not be of less than one–hour fire–resistive construction.

2.3 Openings in the roof shall not be located within 5 feet (1524 mm) of the area separation wall.

2.4 The entire building shall be provided with not less than a Class B roof covering as specified in Table 15–A.

3. Two–hour area separation walls may terminate at the underside of noncombustible roof sheathing, deck or slabs of roofs of noncombustible construction provided:

3.1 Openings in the roof are not located within 5 feet (1524 mm) of the area separation wall.

3.2 The entire building is provided with not less than a Class B roof covering as specified in Table 15–A.

504.6.5 Parapet faces. Parapets of area separation walls shall have noncombustible faces for the uppermost 18 inches (457 mm), including counterflashing and coping materials.

504.6.6 Building of different heights. Where an area separation wall separates portions of a building having different heights, such wall may terminate at a point 30 inches (762 mm) above the lower roof level, provided the exterior wall for a height of 10 feet (3048 mm) above the lower roof is of one–hour fire–resistive construction with openings protected by assemblies having a three–fourths–hour fire–protection rating.

EXCEPTION: Two–hour area separation walls may terminate at the underside of the roof sheathing, deck or slab of the lower roof, provided:

1. When the roof–ceiling framing elements are parallel to the wall, such framing and elements supporting such framing shall not be of less than one–hour fire–resistive construction for a width of 10 feet (3048 mm) along the wall at the lower roof.

2. When the lower roof–ceiling framing elements are perpendicular to the wall, the entire span of such framing and elements supporting such framing shall not be of less than one–hour fire–resistive construction.

3. Openings in the lower roof shall not be located within 10 feet (3048 mm) of the area separation wall.

4. Where the building is not protected by an automatic sprinkler system designed to either NFPA 13 (UBC Standard No. 9-1) or NFPA 13R (UBC Standard 9-3), the exterior wall for a height of 10 feet (3048 mm) above lower roof, shall be of one-hour fire-resistive construction with openings protected by assemblies having a three-fourths-hour fire- protection rating.

Interpretation 1504.6: Where a two hour area separation wall intersects an exterior wall at a point where the exterior wall forms an angle of less than 180 degrees (an inside angle), a property line shall be assumed so as to regulate construction and opening protection per Table No. 5-A.

See Chapters 3 and 4 for special occupancy provisions.

Section 505 — ALLOWABLE AREA INCREASES

505.1 General. The floor areas specified in Section 504 may be increased by employing one of the provisions of this section.

505.1.1 Separation on two sides. Where public ways or yards more than 20 feet (6096 mm) in width extend along and adjoin two sides of the building, floor areas may be increased at a rate of $1^1/_4$ percent for each foot (305 mm) by which the minimum width exceeds 20 feet (6096 mm), but the increase shall not exceed 50 percent.

505.1.2 Separation on three sides. Where public ways or yards more than 20 feet (6096 mm) in width extend along and adjoin three sides of the building, floor areas may be increased at a rate of $2^1/_2$ percent for each foot (305 mm) by which the minimum width exceeds 20 feet (6096 mm), but the increase shall not exceed 100 percent.

505.1.3 Separation on all sides. Where public ways or yards more than 20 feet (6096 mm) in width extend on all sides of a building and adjoin the entire perimeter, floor areas may be increased at a rate of 5 percent for each foot (305 mm) by which the minimum exceeds 20 feet (6096 mm). Such increases shall not exceed 100 percent, except that greater increases shall be permitted for the following occupancies:

1. Group S, Division 1 aircraft storage hangars not exceeding one story in height.

2. Group S, Division 2 or Group F, Division 2 Occupancies not exceeding two stories in height.

3. Group H, Division 5 aircraft repair hangars not exceeding one story in height. Area increases shall not exceed 500 percent for aircraft repair hangars except as provided in Section 505.2.

505.2 Unlimited Area. The area of any one– or two–story building of Groups B; F, Division 1 or 2; M; S, Division 1, 2, 3, 4 or 5; and H, Division 5 Occupancies shall not be limited if the building is provided with an approved automatic sprinkler system throughout as specified in Chapter 9, and entirely surrounded and adjoined by public ways or yards not less than 60 feet (18 288 mm) in width.

The area of a Group S, Division 2 or Group F, Division 2 Occupancy in a one–story Type II, Type III One–hour or Type IV building shall not be limited if the building is entirely surrounded and adjoined by public ways or yards not less than 60 feet (18 288 mm) in width.

505.3 Automatic Sprinkler Systems. The areas specified in Table 5–B and Section 504.2 may be tripled in one–story buildings and doubled in buildings of more than one story if the building is provided with an approved automatic sprinkler system throughout. The area increases permitted in this subsection may be compounded with that specified in Section 505.1.1, 505.1.2 or 505.1.3. The increases permitted in this subsection shall not apply when automatic sprinkler systems are installed under the following provisions:

1. Section 506 for an increase in allowable number of stories.

2. Section 904.2.5.1 for Group H, Divisions 1 and 2 Occupancies.

3. Substitution for one–hour fire–resistive construction pursuant to Section 508.

4. Section 402, Atria.

Section 506 — MAXIMUM HEIGHT OF BUILDINGS AND INCREASES

The maximum height and number of stories of buildings shall be dependent on the character of the occupancy and the type of construction and shall not exceed the limits set forth in Table 5–B, except as provided in this section and as specified in Section 302.1 for mixed occupancy buildings.

EXCEPTIONS: 1. Towers, spires and steeples erected as a part of a building and not used for habitation or storage are limited as to height only by structural design if completely of noncombustible materials, or may extend not to exceed 20 feet (6096 mm) above the height limit in Table 5–B if of combustible materials.

2. The height of one–story aircraft hangars shall not be limited if the building is provided with automatic sprinkler systems throughout as specified in Chapter 9 and is entirely surrounded by public ways or yards not less in width than one and one–half times the height of the building.

Interpretation I506a: An unenclosed and uncovered roof deck shall not be considered a story for the purpose of determining the number of stories in a building.

The story limits set forth in Table 5–B may be increased by one story if the building is provided with an approved automatic sprinkler system throughout. The increase in the number of stories for automatic sprinkler systems shall not apply when the automatic sprinkler systems throughout are installed under the following provisions:

1. Section 904.2.5 for Group H, Divisions 1, 2, 3, 6 and 7 Occupancies.

2. Section 505 for an increase in allowable area.

3. Substitution for one–hour fire–resistive construction pursuant to Section 508.

4. Section 402, Atria.

5. Section 904.2.6 for Group I, Divisions 1.1 and 1.2 Occupancies used as hospitals, nursing homes or health–care centers in Type II One–hour, Type III One–hour, Type IV or Type V One–hour construction.

See Chapters 3 and 4 for special occupancy provisions.

Section 507 — MEZZANINES

A mezzanine need not be counted as a story for determining the allowable number of stories when constructed in accordance with the following:

1. The construction of a mezzanine shall be consistent with the requirements for the type of construction in which the mezzanine is located, but the fire–resistive time period need not exceed one hour for unenclosed mezzanines. The clear height above and below the mezzanine floor construction shall not be less than 7 feet (2134 mm).

Interpretation I507a: Only such main floor area having sufficient ceiling height to produce a proper mezzanine floor shall be used in calculating the size of the mezzanine floor.

Code Alternate CA507a: In buildings of Types I and II construction, where the floor in question is protected throughout by an automatic sprinkler system, mezzanines not exceeding 900 square feet (84 m^2) in area or one-half of the area of the room in which the mezzanine is located, whichever is more restrictive, may have fire retardant treated wood included in the one-hour fire-resistive construction.

2. There shall not be more than two levels of mezzanines in a room. However, there is no limitation on the number of mezzanines within a room.

3. The aggregate area of mezzanines within a room shall not exceed ((~~one third~~)) one half of the area of the room in which they are located.

EXCEPTION: The area of the mezzanine floor within a dwelling unit shall not exceed one half of the area of the main floor of the dwelling unit.

4. All portions of a mezzanine shall be open and unobstructed to the room in which they are located, except for columns and posts and protective walls or railings not more than 44 inches (1118 mm) in height.

EXCEPTIONS: 1. Partitioning may be installed if either of the following conditions exist:

1.1 The aggregate floor area of the enclosed space does not exceed 10 percent of the allowable mezzanine area.

1.2 The occupant load of the enclosed area of the mezzanine does not exceed 10.

2. A mezzanine having two or more exits need not be open into the room in which it is located, provided at least one of the exits gives direct access to a protected exit corridor, an exit court, enclosed exit stairway, exterior exit, exterior exit balcony or exit passageway.

3. In industry facilities, mezzanines used for control equipment may be glazed on all sides.

5. Two exits shall be provided from a mezzanine when two exits are required by Table 10–A.

6. If any required exit enters the room below, the occupant load of the mezzanine shall be added to the occupant load of the room in which it is located.

7. Mezzanines within individual dwelling units shall not be located above other dwelling units or common space other than corridors.

Section 508 — FIRE–RESISTIVE SUBSTITUTION

When an approved automatic sprinkler system is not required throughout a building by other sections of this code, it may be used in a building of Type II One–hour, Type III One–hour and Type V One–hour construction to substitute for the one–hour fire–resistive construction. Such substitution shall not waive or reduce the required fire–resistive construction for:

1. Occupancy separations (Section 302.3).

2. Exterior wall protection due to proximity of property lines (Section 503.2).

3. Area separations (Section 504.6).

4. Dwelling unit separations (Section 310.2.2)

5. Shaft enclosures (Section 711).

6. Corridors (Sections 1005.7 and 1005.8).

7. Stair enclosures (Section 1009).

8. Exit passageways (Section 1011.1).

9. Type of construction separation (Section 601.1).

10. Boiler, central heating plant or hot–water supply boiler room enclosures (Section 302.5).

Interpretation 1508: Substitution of sprinkler systems for one-hour construction may waive or reduce required fire-construction when the waiver or reduction is specifically allowed in the sections referenced above.

Section 509 — GUARDRAILS

509.1 Where Required. Unenclosed floor and roof openings, open and glazed sides of stairways, landings and ramps, balconies or porches, which are more than 30 inches (762 mm) above the adjacent grade or floor below, and roofs used for other than service of the building shall be protected by a guardrail.

EXCEPTION: Guardrails need not be provided at the following locations:

1. On the loading side of loading docks.

2. On the auditorium side of a stage, raised platforms and other raised floor areas such as runways, ramps and side stages used for entertainment or presentation. Along the side of an elevated walking surface when used for the normal functioning of special lighting or for access and use of other special equipment. At vertical openings in the performance area of stages.

3. Along vehicle service pits not accessible to the public.

509.2 Height. The top of guardrails shall not be less than 42 inches (1067 mm) in height.

EXCEPTIONS: 1. The top of guardrails for Group R, Division 3 and Group U, Division 1 Occupancies and interior guardrails within individual dwelling units. Group R, Division 3 congregate residences and guest rooms of Group R, Division 1 Occupancies may be 36 inches (914 mm) in height.

2. The top of guardrails on a balcony immediately in front of the first row of fixed seats and which are not at the end of an aisle may be 26 inches (660 mm) in height.

3. The top of guardrails for stairways, exclusive of their landings, may have a height as specified in Section 1006.9 for handrails.

509.3 Openings. Open guardrails shall have intermediate rails or an ornamental pattern such that a sphere 4 inches (102 mm) in diameter cannot pass through.

EXCEPTIONS: 1. The open space between the intermediate rails or ornamental pattern of guardrails in areas of commercial and industrial–type occupancies which are not accessible to the public may be such that a sphere 12 inches (305 mm) in diameter cannot pass through.

2. The triangular openings formed by the riser, tread and bottom element of a guardrail at the open side of a stairway may be of such size that a sphere 6 inches (152 mm) in diameter cannot pass through.

Code Alternate CA509: Intermediate rails need not be provided at the glazed sides of stairs, ramps and landings provided the glazing complies with Section 2406.6.

For guardrail requirements at grandstands, bleachers or other elevated seating facilities, see Section 1021.5.7.

Section 510 — METHANE REDUCTION MEASURES

510.1 Applicability. This section applies to all construction activities on or within 1,000 feet (305 m) of an active, closed or abandoned landfill that has been identified by the building official to be generating levels of methane gas on-site at the lower explosive limits or greater levels. The distance shall be calculated from the location of the proposed structure to the nearest property line of the active or former landfill site. The building official may waive these requirements if technical studies demonstrate that dangerous amounts of methane are not present on the site.

510.2 Protection of Structures. All enclosed structures to be built within the 1,000 foot (305 m) landfill zone must be protected from potential methane migration. The method for insuring a structure's protection from methane shall be addressed in a report prepared by a licensed civil engineer and submitted by the applicant to the department for approval. The report shall contain a description of the investigation and recommendations for preventing the accumulation of explosive concentrations of methane gas within or under enclosed portions of the building or structure. At the time of final inspection, the civil engineer shall furnish a signed statement attesting

that the building or structure has been constructed in accordance with the recommendations for addressing methane gas migration.

Section 511 — RESTRICTIONS IN THE FIRE DISTRICT

511.1 General. The provisions of this chapter apply only to the Downtown Fire District. All areas of the city lying outside the boundaries described here shall be considered to be outside of the fire district for the purpose of applying this code.

511.2 Downtown Fire District - Boundaries. The Downtown Fire District shall consist of that part of the city within the boundary described as follows:

Beginning at the intersection of the center line of Alaskan Way and Clay Street; thence northeasterly along the center line of Clay Street to an intersection with the center line of Denny Way; thence easterly along the center line of Denny Way to an intersection with the center line of Yale Avenue; thence southeasterly along the center line of Yale Avenue to an intersection with the center line of Interstate Highway 5; thence southerly and south-easterly along the centerline of Interstate 5 to an intersection with the center line of 7th Avenue South; thence southerly along the center line of 7th Avenue South to an intersection with the center line of Dearborn Street; thence westerly along the center line of Dearborn Street to an intersection with the center line of Airport Way; thence northwesterly along the center line of Airport Way to an intersection with the center line of 4th Avenue South; thence southerly along the center line of 4th Avenue South to an intersection with the center line of South Royal Brougham Way; thence westerly along said center line of South Royal Brougham Way to an intersection with the center line of South Alaskan Way; thence southerly along the center line of South Alaskan Way to an intersection with the center line of South Massachusetts Street, thence westerly along the center line of South Massachusetts Street to the Outer Harbor Line in Elliott Bay, thence northerly and northwesterly along said Outer Harbor Line to an intersection with the center line of West Harrison Street, thence easterly along the center line of West Harrison Street to an intersection with the center line of Alaskan Way, then southeasterly along the center line of Alaskan Way to the point of beginning.

511.3 Buildings Located Partially in the Fire District. A building or structure which is located partially within and partially outside of the fire district, shall be considered to be located in the fire district.

511.4 Opposite Lines of Street. For the purpose of this chapter, the opposite line of an adjoining street or alley may be considered an adjacent property line. Distances shall be measured at right angles to the street or alley.

511.5 Occupancies Prohibited in the Downtown Fire District. No Group H, Divisions 1 or 5 Occupancy shall be permitted in the Downtown Fire District. No Group H, Division 2 Occupancy having a floor area in excess of 500 square feet (46 m^2)shall be permitted in the Downtown Fire District. No Group H, Division 3 Occupancy having a floor area in excess of 1,500 square feet (139 m^2) shall be permitted in the Downtown Fire District.

Section 512 — RECYCLABLE MATERIALS.

512.1 Definition. Recyclable materials are those solid wastes that are separated for recycling or reuse, such as papers, metals and glass.

512.3 Storage Space for Recyclable Materials. All occupancies shall be provided with space for the storage of recyclable materials and solid waste.

EXCEPTION: Group R, Division 3 and Group U Occupancies.

The storage area shall be designed to meet the needs of the occupancy, efficiency of pick-up, and shall be available to occupants and haulers.

TABLE 5-A—EXTERIOR WALL AND OPENING PROTECTION BASED ON LOCATION ON PROPERTY FOR ALL CONSTRUCTION TYPES[1,2,3,7]

For exceptions, see Section 503.4.

OCCUPANCY GROUP[4]	CONSTRUCTION TYPE	EXTERIOR WALLS		OPENINGS[5]
		Bearing	Nonbearing	
		Distances are measured to property lines (see Section 503).		
		304.8 for mm		
A-1	I-F.R. II-F.R.	Four-hour N/C	Four-hour N/C less than 5 feet Two-hour N/C less than ((~~20~~)) 16 feet One-hour N/C less than 40 feet NR, N/C elsewhere	Not permitted less than 5 feet Protected less than ((~~20~~)) 16 feet
	II One-hour II-N III One-hour III-N IV-H.T. V One-hour V-N	Group A, Division 1 Occupancies are not allowed in these construction types.		
A-2 A-2.1[8] A-3 A-4	I-F.R. II-F.R. III One-hour IV-H.T.	Four-hour N/C	Four-hour N/C less than 5 feet Two-hour N/C less than ((~~20~~)) 16 feet One-hour N/C less than 40 feet NR, N/C elsewhere	Not permitted less than 5 feet Protected less than ((~~20~~)) 16 feet
A-2 A-2.1[2,8]	II One-hour	Two-hour N/C less than 10 feet One-hour N/C elsewhere	Same as bearing except NR, N/C 40 feet or greater	Not permitted less than 5 feet Protected less than 10 feet
	II-N III-N V-N	Group A, Divisions 2 and 2.1 Occupancies are not allowed in these construction types.		
	V. One-hour	Two-hour less than 10 feet One-hour elsewhere	Same as bearing	Not permitted less than 5 feet Protected less than 10 feet
A-3	II One-hour	Two-hour N/C less than 5 feet One-hour N/C elsewhere	Same as bearing except NR, N/C 40 feet or greater	Not permitted less than 5 feet Protected less than 10 feet
	II-N	Two-hour N/C less than 5 feet One-hour N/C less than ((~~20~~)) 16 feet NR, N/C elsewhere	Same as bearing	Not permitted less than 5 feet Protected less than 10 feet
	III-N	Four-hour N/C	Four-hour N/C less than 5 feet Two-hour N/C less than ((~~20~~)) 16 feet One-hour N/C less than 40 feet NR, N/C elsewhere	Not permitted less than 5 feet Protected less than ((~~20~~)) 16 feet

CS 192

TABLE 5-A—EXTERIOR WALL AND OPENING PROTECTION BASED ON LOCATION ON PROPERTY FOR ALL CONSTRUCTION TYPES[1,2,3,7] (Continued)

OCCUPANCY GROUP[4]	CONSTRUCTION TYPE	EXTERIOR WALLS		OPENINGS[5]
		Bearing	Nonbearing	
		Distances are measured to property lines (see Section 503).		
		304.8 for mm		
A-3 cont.	V One-hour	Two-hour less than 5 feet One-hour elsewhere	Same as bearing	Not permitted less than 5 feet Protected less than 10 feet
	V-N	Two-hour less than 5 feet One-hour less than ((20)) 16 feet NR elsewhere	Same as bearing	Not permitted less than 5 feet Protected less than 10 feet
A-4	II One-hour	One-hour N/C	Same as bearing except NR, N/C 40 feet or greater	Protected less than 10 feet
	II-N	One-hour N/C less than 10 feet NR, N/C elsewhere	Same as bearing	Protected less than 10 feet
	III-N	Four-hour N/C	Four-hour N/C less than 5 feet Two-hour N/C less than ((20)) 16 feet One-hour N/C less than 40 feet NR, N/C elsewhere	Not permitted less than 5 feet Protected less than 10 feet
	V One-hour	One-hour	Same as bearing	Protected less than 10 feet
	V-N	One-hour less than 10 feet NR elsewhere	Same as bearing	Protected less than 10 feet
B, F-1, M, S-1, S-3 17	I-F.R. II-F.R. III One-hour III-N IV-H.T.	Four-hour N/C less than 5 feet Two-hour N/C elsewhere	Four-hour N/C less than 5 feet Two-hour N/C less than ((20)) 16 feet One-hour N/C less than 40 feet NR, N/C elsewhere	Not permitted less than 5 feet Protected less than ((20)) 16 feet
B F-1 M S-1, S-3	II One-hour	One-hour N/C	Same as bearing except NR, N/C 40 feet or greater	Not permitted less than 5 feet Protected less than 10 feet
	II-N[3]	One-hour N/C less than ((20)) 10 feet NR, N/C elsewhere	Same as bearing except NR, N/C 40 feet or greater	Not permitted less than 5 feet Protected less than 10 feet
	V One-hour	One-hour	Same as bearing	Not permitted less than 5 feet Protected less than 10 feet
	V-N	One-hour less than ((20)) 10 feet NR elsewhere	Same as bearing	Not permitted less than 5 feet Protected less than 10 feet

TABLE 5–A—EXTERIOR WALL AND OPENING PROTECTION BASED ON LOCATION ON PROPERTY FOR ALL CONSTRUCTION TYPES[1,2,3,7] (Continued)

OCCUPANCY GROUP[4]	CONSTRUCTION TYPE	EXTERIOR WALLS		OPENINGS[5]
		Bearing	Nonbearing	
		Distances are measured to property lines (see Section 503). 304.8 for mm		
E–1 E–2[2] E–3[2]	I–F.R. II–F.R. III One–hour III–N IV–H.T.	Four–hour N/C	Four–hour N/C less than 5 feet Two–hour N/C less than ((~~20~~)) 16 feet One–hour N/C less than 40 feet NR, N/C elsewhere	Not permitted less than 5 feet Protected less than ((~~20~~)) 16 feet
	II One–hour	Two–hour N/C less than 5 feet One–hour N/C elsewhere	Same as bearing except NR, N/C 40 feet or greater	Not permitted less than 5 feet Protected less than 10 feet
	II–N	Two–hour N/C less than 5 feet One–hour N/C less than 10 feet NR, N/C elsewhere	Same as bearing except NR, N/C 40 feet or greater	Not permitted less than 5 feet Protected less than 10 feet
	V One–hour	Two–hour less than 5 feet One–hour elsewhere	Same as bearing	Not permitted less than 5 feet Protected less than 10 feet
	V–N	Two–hour less than 5 feet One–hour less than 10 feet NR elsewhere	Same as bearing	Not permitted less than 5 feet Protected less than 10 feet
F–2 S–2	I–F.R. II–F.R. III One–hour III–N IV–H.T.	Four–hour N/C less than ((~~5~~)) 3 feet Two–hour N/C elsewhere	Four–hour N/C less than ((~~5~~)) 3 feet Two–hour N/C less than ((~~20~~)) 16 feet One–hour N/C less than 40 feet NR, N/C elsewhere	Not permitted less than 3 feet Protected less than ((~~20~~)) 16 feet
	II One–hour	One–hour N/C	Same as bearing NR, N/C 40 feet or greater	Not permitted less than 5 feet ((~~Protected less than 10 feet~~))
	II–N[3]	One–hour N/C less than 5 feet NR, N/C elsewhere	Same as bearing	Not permitted less than 5 feet ((~~Protected less than 10 feet~~))
	V One–hour	One–hour	Same as bearing	Not permitted less than 5 feet ((~~Protected less than 10 feet~~))
	V–N	One–hour less than 5 feet NR elsewhere	Same as bearing	Not permitted less than 5 feet ((~~Protected less than 10 feet~~))

CS 19.2

TABLE 5–A—EXTERIOR WALL AND OPENING PROTECTION BASED ON LOCATION ON PROPERTY FOR ALL CONSTRUCTION TYPES[1,2,3,7] (Continued)

OCCUPANCY GROUP[4]	CONSTRUCTION TYPE	EXTERIOR WALLS		OPENINGS[5]
		Bearing	Nonbearing	
		Distances are measured to property lines (see Section 503). 304.8 for mm		
H–1[2,3,10,11]	I–F.R. II–F.R.	Four–hour N/C	NR N/C	Not restricted[3]
	II One–hour	One–hour N/C	NR N/C	Not restricted[3]
	II–N	NR N/C	Same as bearing	Not restricted[3]
	III One-hour III–N IV–H.T. V One–hour V–N	Group H, Division 1 Occupancies are not allowed in buildings of these construction types.		
H–2[2,3,10,12] H–3[2,3,10,13] H–4[3,10,14] H–6 H–7	I–F.R. II–F.R. III One–hour III–N IV–H.T.	Four–hour N/C	Four–hour N/C less than 5 feet Two–hour N/C less than 10 feet One–hour N/C less than 40 feet NR, N/C elsewhere	Not permitted less than 5 feet Protected less than ((~~20~~)) 16 feet
	II One–hour	Four–hour N/C less than 5 feet Two–hour N/C less than 10 feet One–hour N/C elsewhere	Four–hour N/C less than 5 feet Two–hour N/C less than 10 feet One–hour N/C less than ((~~20~~)) 16 feet NR, N/C elsewhere	Not permitted less than 5 feet Protected less than ((~~20~~)) 16 feet
	II–N	Four–hour N/C less than 5 feet Two–hour N/C less than 10 feet One–hour N/C less than ((~~20~~)) 16 feet NR, N/C elsewhere	Same as bearing	Not permitted less than 5 feet Protected less than ((~~20~~)) 16 feet
	V One–hour	Four–hour less than 5 feet Two–hour less than 10 feet One–hour elsewhere	((~~Same as bearing~~)) One–hour less than 10 feet NR elsewhere	Not permitted less than 5 feet Protected less than ((~~20~~16 feet
	V–N	Four–hour less than 5 feet Two–hour less than 10 feet One–hour less than ((~~20~~)) 16 feet NR elsewhere	Same as bearing	Not permitted less than 5 feet Protected less than ((~~20~~)) 16 feet

CS 19.2

TABLE 5–A—EXTERIOR WALL AND OPENING PROTECTION BASED ON LOCATION ON PROPERTY FOR ALL CONSTRUCTION TYPES[1,2,3,7] (Continued)				
OCCUPANCY GROUP[4]	CONSTRUCTION TYPE	EXTERIOR WALLS		OPENINGS[5]
		Bearing	Nonbearing	
		Distances are measured to property lines (see Section 503).		
		304.8 for mm		
H–5[2,11]	I–F.R. II–F.R. III One–hour III–N IV–H.T.	Four–hour N/C	Four–hour N/C less than 40 feet One–hour N/C less than 60 feet NR, N/C elsewhere	Protected less than 60 feet
	II One–hour	One–hour N/C	Same as bearing, except NR, N/C 60 feet or greater	Protected less than 60 feet
	II–N	One–hour N/C less than 60 feet NR, N/C elsewhere	Same as bearing	Protected less than 60 feet
	V One–hour	One–hour	Same as bearing	Protected less than 60 feet
	V–N	One–hour less than 60 feet NR elsewhere	Same as bearing	Protected less than 60 feet
I–1.1 I–1.2 I–2 I–3	I–F.R. II–F.R.	Four–hour N/C	Four–hour N/C less than 5 feet Two–hour N/C less than ((~~20~~)) 16 feet One–hour N/C less than 40 feet NR, N/C elsewhere	Not permitted less than 5 feet Protected less than ((~~20~~)) 16 feet
I–1.1 I–1.2 I–3[2,15]	II One–hour	Two–hour N/C less than 5 feet One–hour N/C elsewhere	Same as bearing except NR, N/C 40 feet or greater	Not permitted less than 5 feet Protected less than 10 feet
	V One–hour	Two–hour less than 5 feet One–hour elsewhere	Same as bearing	Not permitted less than 5 feet Protected less than 10 feet
I–1.1 I–1.2 I–2 I–3	II–N III–N V–N	These occupancies are not allowed in buildings of these construction types.[6,15]		
I–3	IV–H.T.	Group I, Division 3 Occupancies are not allowed in buildings of this construction type.		
I–1.1 I–1.2 I–2 I–3[15]	III One–hour	Four–hour N/C	Same as bearing except NR, N/C 40 feet or greater	Not permitted less than 5 feet Protected less than ((~~20~~)) 16 feet

CS 19.2

TABLE 5–A—EXTERIOR WALL AND OPENING PROTECTION BASED ON LOCATION ON PROPERTY FOR ALL CONSTRUCTION TYPES[1,2,3,7] (Continued)				
OCCUPANCY GROUP[4]	CONSTRUCTION TYPE	EXTERIOR WALLS		OPENINGS[5]
		Bearing	Nonbearing	
		Distances are measured to property lines (see Section 503).		
		304.8 for mm		
I–1.1 I–1.2 I–2	IV–H.T.	Four–hour N/C	Same as bearing except NR, N/C 40 feet or greater	Not permitted less than 5 feet Protected less than ((~~20~~)) 16 feet
I–2	II One–hour	One–hour N/C	Same as bearing except NR, N/C 40 feet or greater	Not permitted less than 5 feet Protected less than 10 feet
	V One–hour	One–hour	Same as bearing	Not permitted less than 5 feet Protected less than 10 feet
R–1	I–F.R. II–F.R. III One–hour III–N IV–H.T.	Four–hour N/C less than 3 feet Two–hour N/C elsewhere	Four–hour N/C less than 3 feet Two–hour N/C less than ((~~20~~)) 16 feet One–hour N/C less than 40 feet NR, N/C elsewhere	Not permitted less than 3 feet Protected less than ((~~20~~)) 16 feet
	II One–hour	One–hour N/C	Same as bearing except NR, N/C 40 feet or greater	Not permitted less than 5 feet
	II–N	One–hour N/C less than 5 feet NR, N/C elsewhere	Same as bearing except NR, N/C 40 feet or greater	Not permitted less than 5 feet
	V One–hour	One–hour	Same as bearing	Not permitted less than 5 feet
	V–N	One–hour less than 5 feet NR elsewhere	Same as bearing	Not permitted less than 5 feet
R–3	I–F.R. II–F.R. III One–hour III–N IV–H.T.	Four–hour N/C	Four–hour N/C less than 3 feet Two–hour N/C less than ((~~20~~)) 16 feet One–hour N/C less than 40 feet NR, N/C elsewhere	Not permitted less than 3 feet Protected less than ((~~20~~)) 16 feet
	II One–hour	One–hour N/C	Same as bearing except NR, N/C 40 feet or greater	Not permitted less than 3 feet
	II–N	One–hour N/C less than 3 feet NR, N/C elsewhere	Same as bearing	Not permitted less than 3 feet
	V One–hour	One–hour	Same as bearing	Not permitted less than 3 feet
	V–N	One–hour less than 3 feet NR elsewhere	Same as bearing	Not permitted less than 3 feet

TABLE 5-A—EXTERIOR WALL AND OPENING PROTECTION BASED ON LOCATION ON PROPERTY FOR ALL CONSTRUCTION TYPES[1,2,3,7] (Continued)

OCCUPANCY GROUP[4]	CONSTRUCTION TYPE	EXTERIOR WALLS		OPENINGS[5]
		Bearing	Nonbearing	
		Distances are measured to property lines (see Section 503).		
		304.8 for mm		
S-4	I-F.R. II-F.R. II One-hour II-N[3]	One-hour N/C less than 10 feet NR, N/C elsewhere	Same as bearing	Not permitted less than 5 feet Protected less than 10 feet
	III One-hour III-N IV-H.T. V One-hour V-N	Group S, Division 4 open parking garages are not permitted in these types of construction.		
S-5	II One-hour	One-hour N/C	Same as bearing except NR, N/C 40 feet or greater	Not permitted less than 5 feet Protected less than ((~~20~~)) 16 feet
	III-N[3]	One-hour N/C less than ((~~20~~)) 16 feet NR, N/C elsewhere	Same as bearing except NR, N/C 40 feet or greater	Not permitted less than 5 feet Protected less than ((~~20~~)) 16 feet
	V One-hour	One-hour	Same as bearing	Not permitted less than 5 feet Protected less than ~~20~~ 16 feet
	V-N[3]	One-hour less than ((~~20~~)) 16 feet NR elsewhere	Same as bearing	Not permitted less than 5 feet Protected less than ((~~20~~)) 16 feet
U-1[3]	I-F.R. II-F.R. III One-hour III-N IV-H.T.	Four-hour N/C	Four-hour N/C less than 3 feet Two-hour N/C less than ((~~20~~)) 16 feet One-hour N/C less than 40 feet NR, N/C elsewhere	Not permitted less than 3 feet Protected less than ((~~20~~)) 16 feet
	II One-hour	One-hour N/C	Same as bearing except NR, N/C 40 feet or greater	Not permitted less than 3 feet
	V One-hour	One-hour	Same as bearing	Not permitted less than 3 feet
	II-N[2]	One-hour N/C less than 3 feet[3,16] NR, N/C elsewhere	Same as bearing	Not permitted less than 3 feet
	V-N	One-hour less than 3 feet[3,16] NR elsewhere	Same as bearing	Not permitted less than 3 feet
U-2	All	Not regulated		

N/C — Noncombustible. N R — Nonrated. H.T. — Heavy timber. F.R. — Fire resistive.

[1]See Section 503 for types of walls affected and requirements covering percentage of openings permitted in exterior walls. For walls facing streets, yards and public ways, see also Section 601.5.

[2]For additional restrictions see Chapters 3 and 6.

[3]For special provisions and exceptions, see also Section 503.4.

[4]See Table 3–A for a description of each occupancy type.

[5]Openings in exterior walls shall be protected by a fire assembly having at least a three–fourths–hour fire–protection rating.

[6]See Section ((~~312.2.1~~)) 308.2.1, Exception 3.

[7]See Sections 602 and 603 for allowances of fire-retardant-treated wood in walls which otherwise are required to be noncombustible.

[8]See Section 303.2.2.1 for limitations on Group A-2.1 Occupancies with an occupant load in excess of 1000.

[9]See Section 305.3 for exceptions for Types II-One hour, II-N and V construction.

[10]For special provisions for Group H Occupancies, see Sections 307.2.11 and 307.3. When a detached building is required for group H, Division 1, 2 or 3 Occupancies, there are no requirements for wall and opening protection based on location.

[11]Group H, Divisions 1 and 5 Occupancies are prohibited in the Downtown Fire District. See Section 511.

[12]Group H, Division 2 Occupancies with floor area greater than 500 square feet (46 m^2) are prohibited in the Downtown Fire District. See Section 511.

[13]Group H, Division 3 Occupancies with floor area greater than 1,500 square feet (139 m^2) are prohibited in the Downtown Fire District. See Section 511.

[14]Group H, Division 4 Occupancies having a floor area not exceeding 2,500 square feet (232 m^2) may have exterior walls of not less than two-hour fire-resistive construction when less than 5 feet (1524 mm) from a property line and of not less than one-hour fire-resistive construction when 5 feet (1524 mm) or more but less than 16 feet (4877 mm) from a property line. See Section 307.2.11.

[15]See Section 308.2.2.2 for special provisions for Group I-3 Occupancies.

[16]The requirement for one-hour fire-resistive construction may be limited to the installation of materials approved for such on the outside only. (See Sections 302 and 503).

[17]For code alternate for Group S-3 Occupancies in mixed-use buildings, see Section 311.2.2.1.

TABLE 5-B—BASIC ALLOWABLE BUILDING HEIGHTS AND BASIC ALLOWABLE FLOOR AREA FOR BUILDINGS ONE STORY IN HEIGHT[1]

((~~TYPE OF CONSTRUCTION~~))		TYPES OF CONSTRUCTION								
		I	II			III		IV	V	
		F.R.	F.R.	One-hour	N	One-hour	N	H.T.	One-hour	N
		Maximum Height (feet)								
		UL	160 (48 768 mm)	65 (19 812 mm)	55 (16 764 mm)	65 (19 812 mm)	55 (16 764 mm)	65 (19 812 mm)	50 (15 240 mm)	40 (12 192 mm)
Use Group	((Height))	0.0929 for m[2]								
A-1	H	UL	4	Not Permitted						
	A	UL	29,900							
A-2, 2.1[2]	H	UL	4	2	NP	2	NP	2	2	NP
	A	UL	29,900	13,500	NP	13,500	NP	13,500	10,500	NP
A-3, 4[2]	H	UL	12	2	1	2	1	2	2	1
	A	UL	29,900	13,500	9,100	13,500	9,100	13,500	10,500	6,100
B, F-1, M, S-1, S-3, S-5	H	UL	12	4	2	4	2	4	((~~3~~)) 4	2
	A	UL	39,900	18,000	12,000	18,000	12,000	18,000	14,000	8,000
E-1, 2, 3[4]	H	UL	4	2	1	2	1	2	2	1
	A	UL	45,200	20,200	13,500	20,200	13,500	20,200	15,700	9,100
F-2, S-2[3]	H	UL	12	4	2	4	2	4	((~~3~~)) 4	2
	A	UL	59,900	27,000	18,000	27,000	18,000	27,000	21,000	12,000
H-1[5]	H	1	1	1	1	Not Permitted				
	A	15,000	12,400	5,600	3,700					
H-2[5]	H	UL	2	1	1	1	1	1	1	1
	A	15,000	12,400	5,600	3,700	5,600	3,700	5,600	4,400	2,500
H-3, 4, 5[5]	H	UL	5	2	1	2	1	2	2	1
	A	UL	24,800	11,200	7,500	11,200	7,500	11,200	8,800	5,100
H-6, 7[10]	H	3	3	3	2	3	2	3	3	1
	A	UL	39,900	18,000	12,000	18,000	12,000	18,000	14,000	8,000
I-1.1, 1.2[6]	H	UL	3	1	NP	1	NP	1	1	NP
	A	UL	15,100	6,800	NP	6,800	NP	6,800	5,200	NP
I-2	H	UL	3	2	NP	2	NP	2	2	NP
	A	UL	15,100	6,800	NP	6,800	NP	6,800	5,200	NP
I-3	H	UL	2	Not Permitted[7]						
	A	UL	15,100							
R-1	H	UL	12	4	2[9]	4	2[9]	5	((~~3~~)) 4	2[9]
	A	UL	29,900	13,500	9,100[9]	13,500	9,100[9]	13,500	10,500	6,000[9]
R-3	H	UL	((~~3~~)) 4	((~~3~~)) 4	((~~3~~)) 4	~~3~~ 4	3	((~~3~~)) 4	((~~3~~)) 4	3
	A	Unlimited								
S-4	H	See Table 3-H								
	A									
U[8]	H	See Chapter 3								

	A	

A—Building area in square feet.
H—Building height in number of stories.
H.T.—Heavy timber.
NP—Not permitted.
N—No requirements for fire resistance.
F.R.—Fire resistive.
UL—Unlimited.

[1]For multistory buildings, see Section 504.2.

[2]For limitations and exceptions, see Section 303.2.

[3]For open parking garages, see Section 311.9.

[4]See Section 305.2.3.

[5]See Sections 307 and 412.

[6]See Section 308.2.1 for exception to the allowable area and number of stories in hospitals, nursing homes and health-care centers.

[7]See Section 312.2.2.

[8]For agricultural buildings, see also Appendix Chapter 3.

[9]For limitations and exceptions, see Section 310.2.

[10]Subject to the approval of the building official, buildings containing Group H, Division 7 Occupancies may have increased height when fire and life safety systems are enhanced. A pre-design conference per Section 307.1.7 shall be required.

Section 75. Section 601.1 of the 1994 Uniform Building Code is amended as follows:

601.1 General. The requirements of this chapter are for the various types of construction and represent varying degrees of public safety and resistance to fire. Every building shall be classified by the building official into one of the types of construction set forth in Table 6–A. Any building which does not entirely conform to a type of construction set forth in Table 6–A shall be classified by the building official into a type having an equal or lesser degree of fire resistance.

A building or portion thereof shall not be required to conform to the details of a type of construction higher than that type which meets the minimum requirements based on occupancy or Section 511, Restrictions in the Fire District, even though certain features of such building actually conform to a higher type of construction.

When specific materials, types of construction or fire–resistive protection are required, such requirements shall be the minimum requirements, and any materials, types of construction or fire–resistive protection which will afford equal or greater public safety or resistance to fire, as specified in this code, may be used.

For additional limitations or allowances for special uses or occupancies, see the following:

SECTION	SUBJECT
402	Atria
403	High–rise ((~~office~~)) buildings ((~~and Group R, Division 1 Occupancies~~))
404	Malls
405	Open parking structures
307.11	Group H, Division 6 Occupancies
((~~411~~	~~Aviation control structures~~
~~413~~	~~Agricultural buildings~~
~~3111~~	~~Membrane structures~~))

Section 76. Section 601.4 of the 1994 Uniform Building Code is amended as follows:

601.4 Structural Frame. The structural frame shall be considered to be the columns and the girders, beams, trusses and spandrels having direct connections to the columns and all other members which are essential to the stability of the building as a whole. The members of floor or roof panels which have no connection to the columns shall be considered secondary members and not a part of the structural frame.

Interpretation I601.4: Structural elements supporting tributary areas exceeding 500 square feet (46 m^2) shall be considered part of the structural frame.

Section 77. Section 601.5 of the 1994 Uniform Building Code is amended as follows:

601.5 Exceptions to Table 6–A.

601.5.1 General. The provisions of this section are exceptions to the construction requirements of Table 6–A, Chapter 3 and Sections 602 through 606.

601.5.2 Fixed partitions.

601.5.2.1 Stores and offices. Interior nonload–bearing partitions dividing portions of stores, offices or similar places occupied by one tenant only ((~~and which do not establish a corridor serving an occupant load that would require it to be of fire–resistive construction under the provisions of Section 1005.7~~)) and where one-hour fire-resistive corridors are not otherwise required may be constructed of:

1. Noncombustible materials.

2. Fire–retardant–treated wood.

3. One–hour fire–resistive construction.

4. Wood panels or similar light construction up to three fourths the height of the room in which placed; when more than three fourths the height of the room, such partitions shall not have less than the upper one fourth of the partition constructed of glass.

601.5.2.2 Hotels and apartments. Interior nonload–bearing partitions within individual dwelling units in apartment houses and guest rooms or suites in hotels when such dwelling units, guest rooms or suites are separated from each other and from corridors by not less than one–hour fire–resistive construction may be constructed of:

1. Noncombustible materials ((~~or fire–retardant–treated wood in buildings of any type of construction~~)); or

((~~2. Combustible framing with noncombustible materials applied to the framing in buildings of Type III or V construction.~~))

2. Fire-retardant-treated wood covered with materials complying with Item 4.

3. Combustible framing within a one-hour fire-resistive assembly.

4. Combustible framing with noncombustible materials having an approved thermal barrier with an index of 15 in accordance with U.B.C. Standard No. 26-2 applied to the framing in buildings of Type III or V construction. One-half-inch thick gypsum wallboard is acceptable as a thermal barrier.

Openings to such corridors shall be equipped with doors conforming to Section 1005.8 regardless of the occupant load served.

For use of plastics in partitions, see Section 2603.10.

601.5.3 Folding, portable or movable partitions. Approved folding, portable or movable partitions need not have a fire–resistive rating, provided:

1. They do not block required exits (without providing alternative conforming exits) and they do not establish an exit corridor.

2. Their location is restricted by means of permanent tracks, guides or other approved methods.

3. Flammability shall be limited to materials having a flame–spread classification as set forth in ((~~Table 8–B for rooms or areas~~)) Chapter 8.

Code Alternate CA601.5a: Freestanding Fixtures. Freestanding book shelves, decorative screens, clothes cabinets, closets, office furniture and similar freestanding fixtures more than three-fourths of the height of the room in which they are located may be used to subdivide portions of stores, offices or similar places occupied by one tenant only, provided:

1. They do not block required exits (without providing alternative conforming exits) and they do not establish an exit corridor as defined in Section 1005.

2. Their location is approved by the building official.

3. Flammability shall be limited to materials having a flame-spread classification as set forth in Chapter 8.

Code Alternate CA601.5b: Storage Locker, Mini-warehouse Partitions. Nonbearing partitions separating individual storage lockers in Group S, Division 1 accessory storage areas and in mini-storage warehouse buildings

need not have one hour partitions provided that the storage lockers comply with the provisions of Section 311.2.3.6.

Code Alternate CA601.5c: Walls within Health-care Suites. In suites that comply with Code Alternate CA1019, interior non-load-bearing partitions of noncombustible construction need not be of fire-resistive construction. In buildings of combustible construction, interior non-loading-bearing partitions within suites may be of combustible framing covered with noncombustible materials having an approved thermal barrier with an index of 15 in accordance with U.B.C. Standard No. 26-2. One-half-inch gypsum wallboard is acceptable as a thermal barrier.

601.5.4 Walls fronting on streets or yards. Regardless of fire–resistive requirements for exterior walls, certain elements of the walls fronting on streets or yards having a width of 40 feet (12 192 mm) may be constructed as follows:

1. Bulkheads below show windows, show–window frames, aprons and showcases may be of combustible materials, provided the height of such construction does not exceed 15 feet (4572 mm) above grade.

2. Wood veneer of boards not less than 1–inch (25 mm) nominal thickness or exterior–type panels not less than $^3/_8$–inch (9.5 mm) nominal thickness may be applied to walls, provided the veneer does not exceed 15 feet (4572 mm) above grade, and further provided such veneer shall be placed either directly against noncombustible surfaces or furred out from such surfaces not to exceed $1^5/_8$ inches (41 mm) with all concealed spaces fire–blocked as provided in Section 708. Where boards, panels and furring as described above comply with Section 207 as fire–retardant–treated wood suitable for exterior exposure, the height above grade may be increased to 35 feet (10 668 mm).

601.5.5 Trim. Trim, picture molds, chair rails, baseboards, handrails and show–window backing may be of wood. Unprotected wood doors and windows may be used except where openings are required to be fire protected.

Foam plastic trim covering not more than 10 percent of the wall or ceiling area may be used in other than Group I Occupancies, provided such trim (1) has a density of no less than 20 pounds per cubic foot (320.4 kg/m^3), (2) has a maximum thickness of $^1/_2$ inch (12.7 mm) and a maximum width of 4 inches (102 mm) and (3) has a flame–spread rating no greater than 75.

Materials used for interior finish of walls and ceilings, including wainscoting, shall be as specified in Chapter 8.

601.5.6 Loading platforms. Exterior loading platforms may be of noncombustible construction or heavy–timber construction with wood floors not less than 2–inch (51 mm) nominal thickness. Such wood construction shall not be carried through the exterior walls.

601.5.7 Insulating boards. Combustible insulating boards may be used under finished flooring.

Section 78. Section 602.4 of the 1994 Uniform Building Code is amended as follows:

602.4 Stairway Construction. Stairways shall be constructed of reinforced concrete, iron or steel with treads and risers of concrete, iron or steel. ((~~Brick, marble, tile or other hard noncombustible materials may be used for the finish of such treads and risers.~~)) See Chapter 8 for regulation of interior finishes.

EXCEPTION: Stairways within individual dwelling units and stairways serving a single tenant space may be of fire-retardant-treated wood or heavy-timber construction. In other than Group R Occupancies, such stairways shall not serve as a required exit.

Stairways shall comply with the requirements of Chapter 10.

Section 79. Section 603.1 of the 1994 Uniform Building Code is amended as follows:

603.1 Definition. The structural elements in Type II–F.R. buildings shall be of steel, iron, concrete or masonry.

The structural elements of Type II One–hour or II–N buildings shall be of noncombustible materials.

Floor construction of Type II One–hour and Type II–N buildings shall be of noncombustible material, provided, however, that a wood surface or finish may be applied over such noncombustible material.

Walls and permanent partitions of Type II–F.R. buildings shall be of noncombustible fire–resistive construction, except that permanent nonbearing partitions of one–hour or two–hour fire–resistive construction, which are not part of a shaft enclosure, may have fire–retardant–treated wood (see Section 207) within the assembly.

Type II One–hour buildings shall be of noncombustible construction and one–hour fire resistive throughout except that permanent nonbearing partitions may use fire–retardant–treated wood (see Section 207) within the assembly, provided fire–resistive requirements are maintained.

Walls and permanent partitions of Type II–N buildings shall be of noncombustible materials.

Materials of construction and fire–resistive requirements shall be as specified in Section 601.

For requirements due to occupancy, see Chapter 3.

For requirements in the fire district, see Section 511.

Section 80. Section 603.4 of the 1994 Uniform Building Code is amended as follows:

603.4 Stairway Construction. Stairways of Type II–F.R. buildings shall be constructed of reinforced concrete, iron or steel with treads and risers of concrete, iron or steel. Brick, marble, tile or other hard noncombustible materials may be used for the finish of such treads and risers. Stairways of Type II One–hour and Type II–N buildings shall be of noncombustible construction.

EXCEPTION: Stairways within individual dwelling units and stairways serving a single tenant space may be of fire-retardant-treated wood or heavy-timber construction. In other than Group R Occupancies, such stairways shall not serve as a required exit.

Stairways shall comply with the requirements of Chapter 10.

Section 81. Section 604.1 of the 1994 Uniform Building Code is amended as follows:

604.1 Definition. Structural elements in Type III buildings may be of any materials permitted by this code.

Type III One–hour buildings shall be of one–hour fire–resistive construction throughout.

Interpretation 1604.1: Type III-One hour buildings may include exposed heavy-timber construction for columns, beams, girders, arches, trusses, floors and roof decks except for fire-resistive construction required by Section 711 and Chapters 5 and 10.

See also Sections 605 and 705.

For requirements in the fire district, see Section 511.

Section 82. Section 604.4 of the 1994 Uniform Building Code is amended as follows:

604.4 Stairway Construction.

604.4.1 General. Stairways shall comply with the requirements of Chapter 10.

604.4.2 Interior. Interior stairways ((~~serving buildings not exceeding three stories in height~~)) may be constructed of any material permitted by this code.

((~~In buildings more than three stories in height, interior stairways shall be constructed as required for Type I buildings.~~))

604.4.3 Exterior. Exterior stairways ((~~shall be of noncombustible material except that on buildings not exceeding two stories in height, they~~)) may be constructed of any material permitted by this code. Wood exterior stairways shall be of wood not less than 2 inches (51 mm) in nominal thickness.

Section 83. Section 605.1 of the 1994 Uniform Building Code is amended as follows:

605.1 Definition. Structural elements of Type IV buildings may be of any materials permitted by this code.

Type IV construction shall conform to Section 605.6 except that permanent partitions and members of the structural frame may be of other materials, provided they have a fire resistance of not less than one hour.

For requirements in the fire district, see Section 511.

Section 84. Section 605.4 of the 1994 Uniform Building Code is amended as follows:

605.4 Stairway Construction.

605.4.1 General. Stairways shall comply with the requirements of Chapter 10.

605.4.2 Interior. Interior stairways ((~~serving buildings not exceeding three stories in height~~)) may be constructed of any material permitted by this code. ((~~wood or as required for Type I buildings. If constructed of wood, treads and risers shall not be less than 2 inches (51 mm) in thickness, except where built on laminated or plank inclines as required for floors, where they may be of 1-inch (25 mm) thickness. Wood stair stringers shall be a minimum of 3 inches (76 mm) in thickness and not less than 10 inches (254 mm) in depth.~~

~~In buildings more than three stories in height, interior stairways shall be constructed as required for Type I buildings.~~))

605.4.3 Exterior. Exterior stairways may be constructed of any material permitted by this code. Wood exterior stairways shall ((~~be of noncombustible material except that on buildings not exceeding two stories in height they may~~)) be of wood not less than 2 inches (51 mm) in nominal thickness.

Section 85. Section 606.1 of the 1994 Uniform Building Code is amended as follows:

606.1 Definition. Type V buildings may be of any materials allowed by this code.

Type V One–hour buildings shall be of one–hour fire–resistive construction throughout.

Interpretation I606.1: Type V-One hour buildings may include exposed heavy-timber construction for columns, beams, girders, arches, trusses, floors and roof decks except for fire-resistive construction required by Section 711 and Chapters 5 and 10.

Materials of construction and fire–resistive requirements shall be as specified in Section 601.

For requirements due to occupancy, see Chapter 3.

See also Sections 605 and 705.

For requirements in the fire district, see Section 511.

Section 86. Table 6-A of the 1994 Uniform Building Code is amended as follows:

TABLE 6-A—TYPES OF CONSTRUCTION—FIRE-RESISTIVE REQUIREMENTS (In Hours)
For details, see occupancy section in Chapter 3, type of construction sections in this chapter and sections referenced in this table.

BUILDING ELEMENT	TYPE I	TYPE II			TYPE III		TYPE IV	TYPE V	
		Noncombustible			Combustible				
	Fire-resistive	Fire-resistive	1-Hr.	N	1-Hr.	N	H.T.	1-Hr.	N
1. Bearing walls—exterior	4 Sec. 602.3.1	4 Sec. 603.3.1	1	N	4 Sec. 604.3.1	4 Sec. 604.3.1	4 Sec. 605.3.1	1	N
2. Bearing walls—interior	3	2	1	N	1	N	1	1	N
3. Nonbearing walls—exterior	4 Sec. 602.3.1	4 Sec. 603.3.1	1 Sec. 603.3.1	N	4 Sec. 604.3.1	4 Sec. 604.3.1	4 Sec. 605.3.1	1	N
4. Structural frame[1]	3	2	1	N	1 or H.T.	N	1 or H.T.	1 or H.T.	N
5. Partitions—permanent	1[2]	1[2]	1[2]	N	1	N	1 or H.T.	1	N
6. Shaft enclosures[3]	2	2	1	1	1	1	1	1	1
7. Floors and floor-ceilings[4]	2	2	1	N	1	N	H.T. or 1	1 Sec. 606.1	N
8. Roofs and roof-ceilings	2 Sec. 602.5	1 Sec. 603.5	1 Sec. 603.5	N	1 Sec. 604.1	N	H.T. or 1	1 Sec. 606.1	N
9. Exterior doors and windows	Sec. 602.3.2	Sec. 603.3.2	Sec. 603.3.2	Sec. 603.3.2	Sec. 604.3.2	Sec. 604.3.2	Sec. 605.3.2	Sec. 606.3	Sec. 606.3
10. Stairway construction	Sec. 602.4	Sec. 603.4	Sec. 603.4	Sec. 603.4	Sec. 604.4	Sec. 604.4	Sec. 605.4	Sec. 606.4	Sec. 606.4

CS-19.2

N—No general requirements for fire resistance. H.T.—Heavy timber.

[1]Structural frame elements in an exterior wall that is located where openings are not permitted or where protection of openings is required, shall be protected against external fire exposure as required for exterior bearing walls or the structural frame, whichever is greater.

[2]Fire-retardant-treated wood (see Section 207) may be used in the assembly, provided fire-resistance requirements are maintained. See Sections 602 and 603.

[3]For special provisions, see Sections 304.6, 306.6 and 711.

[4]Ventilation openings may be provided in unenclosed balconies according to Section 710.2.

Section 87. Section 705 of the 1994 Uniform Building Code is amended as follows:

Section 705 — PROJECTIONS

Cornices, eave overhangs, exterior balconies and similar architectural appendages extending beyond the floor area as defined in Section 207 shall conform to the requirements of this section. (See Sections 1005 and 1006 for additional requirements applicable to exterior exit balconies and stairways.)

Projections from walls of Type I or II construction shall be of noncombustible materials.

Projections from walls of Type III, IV or V construction may be of noncombustible or combustible materials.

Interpretation I705a: Balconies that are included in the floor areas defined in Section 207 shall be constructed with a fire-resistive value equivalent to the fire resistance required for floors. See Section 710.2 for allowable vent penetrations.

Interpretation I705b: Eave overhangs from walls of Type III One-Hour, IV or V One-hour construction or from walls that are otherwise required to be of fire resistive construction shall be finished on the underside with at least 1/2-inch (13 mm) gypsum sheathing or equivalent or shall be heavy-timber construction conforming to Section 605.6. See Section 710.2 for allowable vent penetrations.

Combustible projections located where openings are not permitted or where protection of openings is required shall be of one–hour fire–resistive or heavy–timber construction conforming to Section 605.6.

EXCEPTION: Eave overhangs may be of less than one-hour construction provided the underside is finished with at least 1/2-inch (13 mm) gypsum sheathing or equivalent.

For projections extending over public property, see Chapter 32.

For combustible ornamentation, see Section 601.5.4.

For limitations on projection distances, see Sections 503.2 and 1204.

Section 88. Section 707 of the 1994 Uniform Building Code is amended as follows:

Section 707 — INSULATION

707.1 General. Thermal and acoustical insulation located on or within floor–ceiling and roof–ceiling assemblies, crawl spaces, walls, partitions and insulation on pipes and tubing shall comply with this section. Duct insulation and insulation in plenums shall conform to the requirements of the Mechanical Code.

EXCEPTION: Roof insulation shall comply with Section 1510.

In addition, thermal insulation shall conform to the requirements of the Seattle Energy Code.

707.2 Insulation and Covering on Pipe and Tubing. Insulation and covering on pipe and tubing shall have a flame–spread rating not to exceed 25 and a smoke density not to exceed 450 when tested in accordance with U.B.C. Standard 8–1.

EXCEPTION: Foam plastic insulation shall comply with Section 2602.

707.3 Insulation. All insulation materials, including facings, such as vapor barriers or breather papers installed within floor–ceiling assemblies, roof–ceiling assemblies, walls, crawl spaces or attics, shall have a flame–spread rating not to exceed 25 and a smoke density not to exceed 450 when tested in accordance with U.B.C. Standard 8–1.

EXCEPTIONS: 1. Foam plastic insulation shall comply with Section 2602.

2. When such materials are installed in concealed spaces of Types III, IV and V construction, the flame–spread and smoke–developed limitations do not apply to facings, provided that the facing is installed in substantial contact with the unexposed surface of the ceiling, floor or wall finish.

3. This section shall not apply to cellulose insulation regulated by the Consumer Product Safety Commission as provided in CPSC 16 CFR, Parts 1209 and 1404.

Section 89. Section 708 of the 1994 Uniform Building Code is amended as follows:

Section 708 — FIRE BLOCKS AND DRAFT STOPS

708.1 General. In combustible construction, fireblocking and draftstopping shall be installed to cut off all concealed draft openings (both vertical and horizontal) and shall form an effective barrier between floors, between a top story and a roof or attic space, and shall subdivide attic spaces, concealed roof spaces and floor–ceiling assemblies. The integrity of all fire blocks and draft stops shall be maintained.

708.2 Fire Blocks.

708.2.1 Where required. Fireblocking shall be provided in the following locations:

1. In concealed spaces of stud walls and partitions, including furred spaces, at the ceiling and floor levels and at 10–foot (3048 mm) intervals both vertical and horizontal. See also Section 803, Item 1.

EXCEPTION: Fire blocks may be omitted at floor and ceiling levels when approved smoke–actuated fire dampers are installed at these levels.

2. At all interconnections between concealed vertical and horizontal spaces such as occur at soffits, drop ceilings and cove ceilings.

3. In concealed spaces between stair stringers at the top and bottom of the run and between studs along and in line with the run of stairs if the walls under the stairs are unfinished.

4. In openings around vents, pipes, ducts, chimneys, fireplaces and similar openings which afford a passage for fire at ceiling and floor levels, with noncombustible materials.

5. At openings between attic spaces and chimney chases for factory–built chimneys.

6. Where wood sleepers of 2-inch nominal thickness or less are used for laying wood flooring on masonry or concrete fire–resistive floors, the space between the floor slab and the underside of the wood flooring shall be filled with noncombustible material or fire blocked in such a manner that there will be no open spaces under the flooring which will exceed 100 square feet (9.3 m^2) in area and such space shall be filled solidly under all permanent partitions so that there is no communication under the flooring between adjoining rooms. For raised floors, see Section 710.3.2.

EXCEPTIONS: 1. Fire blocking need not be provided in such floors when at or below grade level in gymnasiums.

2. Fire blocking need be provided only at the juncture of each alternate lane and at the ends of each lane in a bowling facility.

708.2.2 Fire block construction. Except as provided in Item 4 above, fireblocking shall consist of 2 inches (51 mm) nominal lumber or two thicknesses of 1–inch (25 mm) nominal lumber with broken lap joints or one thickness of $^{23}/_{32}$–inch (18.3 mm) wood structural panel with joints backed by $^{23}/_{32}$–inch (18.3 mm) wood structural panel or one thickness of $^{3}/_{4}$–inch (19.1 mm) Type 2–M particleboard with joints backed by $^{3}/_{4}$–inch (19.1 mm) Type 2–M particleboard.

Fire blocks may also be of gypsum board, cement asbestos board, mineral fiber, glass fiber or other approved materials securely fastened in place. Loose–fill insulation material shall not be used as a fire block unless specifically fire tested.

Walls having parallel or staggered studs for sound–transmission control shall have fire blocks of mineral fiber or glass fiber or other approved nonrigid materials.

708.3 Draft Stops.

708.3.1 Where required. Draftstopping shall be provided in the locations set forth in this section.

708.3.1.1 Floor–ceiling assemblies.

708.3.1.1.1 Single–family dwellings. When there is usable space above and below the concealed space of a floor–ceiling assembly in a single–family dwelling, draft stops shall be installed so that the area of the concealed space does not exceed 1,000 square feet (93 m^2). Draftstopping shall divide the concealed space into approximately equal areas.

708.3.1.1.2 Two or more dwelling units and hotels. Draft stops shall be installed in floor–ceiling assemblies of buildings having more than one dwelling unit and in hotels. Such draft stops shall be in line with walls separating individual dwelling units and guest rooms from each other and from other areas.

708.3.1.1.3 Other uses. Draft stops shall be installed in floor–ceiling assemblies of buildings or portions of buildings used for other than dwelling or hotel occupancies so that the area of the concealed space does not exceed 1,000 square feet (93 m^2) and so that the horizontal dimension between stops does not exceed 60 feet (18 288 mm).

EXCEPTION: Where approved automatic sprinklers are installed within the concealed space, the area between draft stops may be 3,000 square feet (279 m^2) and the horizontal dimension may be 100 feet (30 480 mm).

708.3.1.2 Attics.

708.3.1.2.1 Two or more dwelling units and hotels. Draft stops shall be installed in the attics, mansards, overhangs, false fronts set out from walls and similar concealed spaces of buildings containing more than one dwelling unit and in hotels. Such draft stops shall be above and in line with the walls separating individual dwelling units and guest rooms from each other and from other uses.

EXCEPTIONS: 1. Draft stops may be omitted along one of the corridor walls, provided draft stops at walls separating individual dwelling units and guest rooms from each other and from other uses, extend to the remaining corridor draft stop.

2. Where approved sprinklers are installed, draftstopping may be as specified in the exception to Section 708.3.1.2.2 below.

Code Alternate CA708.3: Where a building contains more than four dwelling units or guest rooms, or where a building is more than two stories in height, draftstopping may be as provided in Section 708.3.1.2.2

708.3.1.2.2 Other uses. Draft stops shall be installed in attics, mansards, overhangs, false fronts set out from walls and similar concealed spaces of buildings having uses other than dwellings or hotels so that the area between draft stops does not exceed 3,000 square feet (279 m^2) and the greatest horizontal dimension does not exceed 60 feet (18 288 mm).

EXCEPTION: Where approved automatic sprinklers are installed, the area between draft stops may be 9,000 square feet (836 m^2) and the greatest horizontal dimension may be 100 feet (30 480 mm).

708.3.1.3 Draft stop construction. Draftstopping materials shall not be less than $^1/_2$–inch (12.7 mm) gypsum board, $^3/_8$–inch (9.5 mm) wood structural panel, $^3/_8$–inch (9.5 mm) Type 2–M particleboard or other approved materials adequately supported.

Openings in the partitions shall be protected by self–closing doors with automatic latches constructed as required for the partitions.

Ventilation of concealed roof spaces shall be maintained in accordance with Section 1505.

708.4 Draft Stops or Fire Blocks in Other Locations. Fireblocking of veneer on noncombustible walls shall be in accordance with Section 708.2.1, Item 1, above.

For fireblocking ceilings applied against noncombustible construction, see Section 803, Item 1.

Section 90. Section 709.1 of the 1994 Uniform Building Code is amended as follows:

709.1 General. Fire–resistive walls and partitions shall be assumed to have the fire–resistance ratings set forth in Table 7–B.

Interpretation I709.1a: Where vinyl siding is installed over gypsum sheathing in Type V-One hour applications, the minimum thickness of the sheathing shall be 5/8 inch. See also Section 1404.

Interpretation I709.1b: Where metal siding, including aluminum, is installed over gypsum sheathing in Type V-One hour applications, the minimum thickness of the sheathing shall be 1/2 inch.

Section 91. Section 709.3 of the 1994 Uniform Building Code is amended as follows:

709.3 Exterior Walls.

709.3.1 Extension through attics ((~~and concealed spaces~~)). In fire–resistive exterior wall construction, the fire–resistive rating shall be maintained for such walls passing through attic areas ((~~or other areas containing concealed spaces~~)).

709.3.2 Vertical fire spread at exterior walls.

709.3.2.1 General. The provisions of this section are intended to restrict the passage of smoke, flame and hot gases from one floor to another at exterior walls. See Section 710 for floor penetrations.

709.3.2.2 Interior. When fire–resistive floor or floor–ceiling assemblies are required, voids created at the intersection of the exterior wall assemblies and such floor assemblies shall be sealed with an approved material. Such material shall be securely installed and capable of preventing the passage of flame and hot gases sufficient to ignite cotton waste when subjected to U.B.C. Standard 7–1 time–temperature fire conditions under a minimum positive pressure differential of 0.01 inch (0.25 mm) of water column for the time period at least equal to the fire–resistance rating of the floor assembly.

709.3.2.3 Exterior. When openings in an exterior wall are above and within 5 feet (1524 mm) laterally of an opening in the story below, such openings shall be separated by an approved flame barrier extending 30 inches (762 mm) beyond the exterior wall in the plane of the floor or by approved vertical flame barriers not less than 3 feet (914 mm) high measured vertically above the top of the lower opening. Flame barriers shall have a fire resistance of not less than three–fourths hour.

EXCEPTIONS: 1. Flame barriers are not required in buildings equipped with an approved automatic sprinkler system throughout.

2. This section shall not apply to buildings of three stories or less in height.

Section 92. Section 710 of the 1994 Uniform Building Code is amended as follows:

710.1 General. Fire–resistive floors, floor–ceiling or roof–ceiling assemblies shall be assumed to have the fire–resistance ratings set forth in Table 7–C. When materials are incorporated into an otherwise fire–resistive assembly which may change the capacity for heat dissipation, fire test results or other substantiating data ((~~shall be made available to~~)) may be required by the building official to show that the required fire–resistive time period is not reduced.

710.2 Ceiling Membrane Protection. When a ceiling forms the protective membrane for a fire–resistive floor–ceiling or roof–ceiling assembly, the ceiling shall be without openings in order to protect structural elements.

EXCEPTIONS: 1. Openings for noncombustible sprinkler pipe and openings for steel electrical outlet boxes not greater than 16 square inches (10 320 mm^2) in area may be installed, provided the aggregate area of such openings through the ceiling is not more than 100 square inches (64 500 mm^2) for any 100 square feet (9.3 m^2) of ceiling area.

2. Duct openings protected with approved ceiling fire dampers.

3. In other than corridors that are required to have fire–resistive ceilings, duct openings may be unprotected when tests, conducted in accordance with U.B.C. Standard 7–1, have shown that opening protection is not required to maintain the fire resistance of the assembly.

4. Other ceiling openings and penetrations may be installed where such openings and penetrations and the assemblies in which they are utilized are tested in accordance with the provisions of U.B.C. Standard 7–1.

5. Openings enclosed in fire–resistance–rated shaft enclosures.

6. Access doors may be installed in such ceilings when they are approved horizontal access door assemblies listed for such purpose.

7. Vents may be installed in soffits of exterior balconies required to have fire resistive value equivalent to the floor. If provided, vent openings shall be covered with corrosion–resistant metal mesh.

8. When Section 705 requires that eaves be finished on the underside with fire-resistive materials, vents may be installed, provided the vent openings are covered with corrosion–resistant metal mesh.

Where the weight of lay–in ceiling panels used as part of fire–resistive floor–ceiling or roof–ceiling assemblies is not adequate to resist an upward force of 1 pound per square foot (47.9 Pa), wire holddowns or other approved devices shall be installed above the panels to prevent vertical displacement under such upward force.

710.3 Floors.

710.3.1 Floor Penetrations. Fire–resistive floors and floors which are part of a floor–ceiling assembly shall be continuous without openings or penetrations in order to completely separate one story or basement from another.

EXCEPTIONS: 1. Openings enclosed in fire–resistive–rated shaft enclosures in accordance with Section 711.1.

2. Exit enclosures in accordance with Chapter 10.

3. Openings permitted in accordance with Section 711.3.

4. Atria constructed in accordance with Section 402.

5. Penetrations protected with through–penetration fire stops installed to provide an F rating or a T rating in accordance with Section 702. The T rating shall apply only to:

5.1 Penetrations which are not contained within a wall at the point where they penetrate the floor, or

5.2 Penetrations which are larger than a 4–inch (100 mm) nominal pipe or 16 square inches (10 320 mm^2) in overall cross–sectional area.

6. Penetrations not larger than a 4–inch (100 mm) nominal pipe or 16 square inches (10 320 mm^2) in overall cross–sectional area containing noncombustible penetrating items, where the annular space between the penetrating items and the floor assembly being penetrated is filled with a material which will prevent the passage of flame and hot gases sufficient to ignite cotton waste when subjected to U.B.C. Standard 7–1 time–temperature fire conditions under a minimum positive pressure differential of 0.01–inch (0.25 mm) water column at the location of the penetration for the time period at least equal to the fire–resistance rating of the floor assembly.

7. Penetrations not larger than a 4–inch (100 mm) nominal copper or ferrous pipe and conduit or 16 square inches (10 320 mm^2) of overall cross–sectional area containing copper or ferrous penetrating items, where the annular space between the penetrating items and the floor assembly being penetrated is filled with concrete, grout or mortar for the full thickness of the floor assembly (or the thickness necessary to provide the required fire–resistance rating of the assembly being penetrated) at the location of the penetration in concrete floor assemblies.

710.3.2 Raised Floors.

710.3.2.1 General. A raised floor is a flooring system constructed above the structural floor by more than the equivalent height of 2 inch nominal thickness wood sleepers, and which has unusable space between the flooring and the structural floor.

Walls required to have fire-resistive construction by either Chapter 5 or 10 shall be fire stopped to the structural floor with construction of the same fire resistance as the wall.

710.3.2.2 Buildings of Type I and II Construction. In Types I and II buildings, raised floors shall be constructed of noncombustible materials or fire retardant treated wood. If fire retardant treated wood is used, one of the following measures shall be taken:

1. In a fully sprinklered building, the sprinkler system shall be extended into each void space; or

2. All void spaces shall be filled with noncombustible material; or

3. Fire blocking shall be constructed so that no void space under the raised floor exceeds 100 square feet (9.3 m^2) in area. In sprinklered buildings, the walls and soffits of the void space shall be protected on the inside as required for one-hour fire resistive construction.

See Sections 708.2.1 for floors in which wood sleepers of 2 inch or less are used.

710.3.2.3 Buildings of Type III, IV and V Construction. Raised floors in Group A, Divisions 1, 2 or 2.1 occupancies shall conform with the provisions of Section 710.3.2.2. In all other occupancies located in buildings of Types III, IV and V construction, raised floors may be constructed of untreated wood, provided that draft stopping and fire blocking are provided as specified in Section 708.

In buildings protected by an automatic sprinkler system, the system shall extend into each void space. In non-sprinklered buildings each void space shall either be filled with noncombustible material or shall be protected on the inside as required for one-hour fire-resistive construction.

710.4 Roofs. Fire–resistive roofs may have unprotected openings. See Chapter 24 for skylight construction.

710.5 Wiring in Plenums. Wiring in plenums shall comply with the Mechanical Code.

710.6 Construction Joints. Construction joints in fire–resistive floors shall comply with the requirements of Section 706.

Section 93. Section 711 of the 1994 Uniform Building Code is amended as follows:

711.1 General. Openings through floors shall be enclosed in a shaft enclosure of fire–resistive construction having the time period set forth in Table 6–A for "shaft enclosures" except as permitted in Sections 711.3, 711.5 ((~~and~~)) 711.6 and 711.7. See also Section 304.6 for shafts in Group B Occupancies, Sections 306 and 307.11.2.3 for shafts in Group H Occupancies and Section ((~~309.8~~)) 310.8 for shafts in Group R Occupancies.

711.2 Extent of Enclosures. Shaft enclosures shall extend from the lowest floor opening through successive floor openings and shall be enclosed at the top and bottom.

EXCEPTIONS: 1. Shafts extending through or to the underside of the roof sheathing, deck or slab need not be enclosed at the top.

2. Noncombustible ducts, vents or chimneys used to convey vapors, dusts or combustion products may penetrate the enclosure at the bottom.

3. Shafts need not be enclosed at the bottom when protected by fire dampers conforming to approved recognized standards, installed at the lowest floor level within the shaft enclosure.

Shaft enclosures shall be constructed to continuously maintain the required fire–resistive integrity.

711.3 Special Provision. In other than Group I Occupancies, openings which penetrate only one floor and are not connected with openings communicating with other stories or basements and which are not concealed within building construction assemblies need not be enclosed.

An enclosure shall not be required for automobile ramps in Group S, Division 3 parking garages. An enclosure shall not be required for openings through floors in a Group S, Division 3 parking garage when the occupancy is provided with an approved automatic sprinkler system throughout.

Code Alternate CA711.3a: Shafts in Group R, Division 3 Occupancies and within individual dwelling units in Group R, Division 1 Occupancies need not comply with Table No. 6-A provided such shafts are effectively draft stopped at each floor or ceiling.

Exit enclosures shall conform to the applicable provisions of Section 1009.

In one– and two–story buildings other than Group I Occupancies, gas vents, ducts, piping and factory–built chimneys which extend through not more than two floors need not be enclosed, provided the openings around the penetrations are fire stopped at each floor.

EXCEPTION: BW gas vents installed in accordance with their listing.

Gas vents and factory–built chimneys shall be protected as required by the Mechanical Code.

Walls containing gas vents or combustible or noncombustible piping which pass through three floors or less need not provide the fire–resistance rating specified in Table 6–A for "shaft enclosures," provided the annular space around the vents or piping is ((~~filled~~)) covered at each floor or ceiling with noncombustible materials.

EXCEPTIONS: 1. BW gas vents installed in accordance with their listing.

2. Walls in buildings of Types III, IV and V construction need not provide the fire-resistance rating specified in Table 6-A for shaft enclosures.

Code Alternate CA711.3b: Walls containing gas vents or combustible or noncombustible piping which pass through four floors or less need not be fire–resistance rated, provided the building is protected with an automatic sprinkler system and the annular space around the vents or piping is covered at each floor or ceiling with noncombustible materials.

Openings made through a floor for penetrations such as cables, cable trays, conduit, pipes or tubing which are protected with approved through–penetration fire stops to provide the same degree of fire resistance as the floor construction need not be enclosed. For floor–ceiling assemblies, see Section 710.

711.4 Protection of Openings. Openings into a shaft enclosure shall be protected by a self–closing or an automatic–closing fire assembly conforming to Section 713 and having a fire–protection rating of one hour for openings through one–hour fire–resistive walls and one and one–half hours for openings through two–hour fire–resistive walls.

EXCEPTIONS: 1. Openings to the exterior may be unprotected when permitted by Table 5–A.

2. Openings protected by through–penetration fire stops to provide the same degree of fire resistance as the shaft enclosure. See Sections 709 and 710.

Interpretation I711.4: Air ducts passing through exit enclosures shall be separated from the enclosure by fire-resistive construction at least equal to the exit enclosure walls.

Openings in shaft enclosures penetrating smoke barriers shall be further protected by smoke dampers conforming with approved recognized standards. See Chapter 35, Part III.

EXCEPTIONS: 1. Exhaust–only openings serving continuously operating fans and protected using the provisions of Chapter 9.

2. Smoke dampers are not required when their operation would interfere with the function of a smoke–control system.

711.5 Rubbish and Linen Chute Termination Rooms. In other than Group R, Division 3 Occupancies, rubbish and linen chutes shall terminate in rooms separated from the remainder of the building by an occupancy separation having the same fire resistance as required for the shaft enclosure, but not less than one hour. Openings into chutes and chute termination rooms shall not be located in exit corridors or stairways. For sprinklers, see Section 904.2.2.

711.6 Chute and Dumbwaiter Shafts. In buildings of Type V construction, chutes and dumbwaiter shafts with a cross–sectional area of not more than 9 square feet (0.84 m^2) may be either of approved fire–resistive wall construction or may have the inside layers of the approved fire–resistive assembly replaced by a lining of not less than 0.019–inch (0.48 mm) No. 26 galvanized sheet gage metal with all joints locklapped. The outside layers of the wall shall be as required for the approved construction. All openings into any such enclosure shall be protected by not less than a self–closing solid–wood door $1^3/_8$ inches (35 mm) thick or equivalent.

Code Alternate CA 711.11: Dumbwaiter shafts containing cars with enclosed sides need not be covered with sheet metal.

711.7 Elevator and Stairway Shafts.

711.7.1 Scope. Shafts containing elevators which serve 4 or more floors and located in buildings which meet all of the following conditions and which do not comply with Section 905 shall comply with either Section 711.7.2 or Section 711.7.3.

1. Buildings occupied by Group B offices; and

2. Buildings, other than highrise, of Types I or II-F.R. construction; and

3. Buildings which have an occupant load of 30 or more per floor.

Item 3 shall also apply to shafts containing either elevators or stairways in other buildings when referenced by other provisions of this code.

711.7.2. Lobbies. When compliance with this section is required by Section 711.7.1, elevators on all floors shall open into elevator lobbies which are separated from the remainder of the building by walls of not less than one-hour fire-resistive construction. Openings through such walls shall conform to Section 1005.8.

711.7.3. Emergency Shaft Pressurization. When compliance with this section is required by Section 711.7.1, shafts shall be protected by an emergency shaft pressurization system complying with the following:

1. Shafts shall be pressurized to 0.15 inch of water column relative to atmospheric pressure. Stairway pressurization shall be measured with all stairway doors closed. Elevator pressurization shall be measured with elevator cars at the designated recall level with the doors in the open position.

EXCEPTION: In buildings protected throughout with an automatic sprinkler system, elevator shafts may be pressurized to not less than 0.10 inch of water column.

2. The emergency shaft pressurization shall be activated by a fire alarm system which shall include smoke detectors in the corridors located near the shaft on each floor in a manner approved by the building official and the fire chief. If the building has a fire alarm panel, smoke detectors shall be connected to, with power supplied by, the fire alarm panel.

3. Emergency pressurization equipment and its duct work located within the building shall be separated from other portions of the building by construction equal to that required for the shaft.

4. Shaft pressurization air intakes shall be located at the exterior of the building.

EXCEPTION: Intakes for elevator shaft pressurization may be located within the building provided they shall be located no more than 20 feet (6096 mm) from major openings in the building exterior such as loading docks and vehicular entrances. Such intake shall be provided with smoke detectors which shall deactivate the pressurization system for that shaft.

5. An emergency source of power shall be provided for the fire alarm system and emergency pressurization system. One power source shall be permitted if it conforms to Seattle Electrical Code Section 230-82, Exception 5; otherwise two sources of power shall be provided conforming to Electrical Code Section 700.12 (a) through (f).

6. Other measures to prevent loss of pressurization shall be provided in the design and construction of shafts, such as quality of workmanship and caulking of penetrations and joints.

Section 94. Section 712 of the 1994 Uniform Building Code is amended as follows:

Section 712 — USABLE SPACE UNDER FLOORS

((~~Usable~~)) Enclosed storage space under the first story ((~~shall be enclosed, and such enclosure, when constructed of metal or wood,~~)) shall be protected on the side of the usable space as required for one-hour fire-resistive construction. ((~~Doors shall be self-closing, tight-fitting of solid wood construction 1 3/8 inches (35 mm) in~~

~~thickness or self-closing, tight-fitting doors acceptable as a part of an assembly having a fire-protection rating of not less than 20 minutes when tested in accordance with Part II of U.B.C. Standard 7-2.~~))

EXCEPTIONS: 1. Group R, Division 3 and Group U Occupancies.

((~~2. Basements in single-story Group S, Division 3 repair garages where 10 percent or more of the area of the floor-ceiling is open to the first floor.~~))

((~~3~~)) 2. Under-floor spaces protected by an automatic sprinkler system.

Section 95. The 1994 Uniform Building Code is amended by adding Section 715 as follows:

Section 715 —ELECTRICAL WIRING, PIPES, DUCTS AND EQUIPMENT IN ELEVATOR HOISTWAYS AND MACHINE ROOMS

715.1 Wiring. Electrical wiring and equipment installed in a hoistway, elevator machine room or elevator machinery space shall be installed in accordance with the Seattle Electrical Code.

Unless installed to serve that space only, electrical wiring and equipment shall not be installed in any hoistway, elevator machine room or machinery space. See also Section 3022.

715.2 Pipes, Ducts and Mechanical Equipment. Unless installed to serve that space only, ducts or mechanical equipment shall not be installed in hoistways, elevator machine rooms or machinery spaces. Pipes shall not be installed in hoistways, elevator machine rooms or machinery spaces.

EXCEPTIONS: 1. Ducts used for heating, cooling, ventilating or pressurization; and equipment used for heating of hoistways, elevator machine rooms or machinery spaces may be installed in accordance with Section 3022.

2. Ducts may pass through an elevator machine room or machinery space provided they are separated from the room or space by construction equal to the rated construction of the room or space and so located that all required clearances are maintained.

Section 96. Chapter 8 of the 1994 Uniform Building Code is amended as follows:

Chapter 8
INTERIOR FINISHES

Section 801 — GENERAL

801.1 Scope. Interior ((~~wall and ceiling~~)) finish shall mean interior wainscoting, paneling, carpeting or other finish applied structurally or for decoration, acoustical correction, surface insulation, sanitation or similar purposes. Requirements for finishes in this chapter shall not apply to trim defined as picture molds, chair rails, baseboards and handrails; to doors and windows or their frames; or to materials which are less than $^1/_{28}$ inch (0.9 mm) in thickness applied directly to the surface of walls or ceilings, if these materials have surface-burning characteristics no greater than paper of this thickness applied directly to a noncombustible backing in the same manner.

See also Chapter 30 for regulation of finishes in elevator cars.

Foam plastics shall not be used as interior finish except as provided in Section 2602. For foam plastic trim, see Section 601.5.5.

See Section 1403 for veneer.

801.2 Standards of Quality. The standards listed below labeled a "U.B.C. standard" are also listed in Chapter 35, Part II, and are part of this code.

1. U.B.C. Standard 8–1, Test Method for Surface–burning Characteristics of Building Materials

2. U.B.C. Standard 8–2, Standard Test Method for Evaluating Room Fire Growth Contribution of Textile Wall Covering

801.3 Veneer. Veneers shall comply with Section 1403.

Section 802 — TESTING AND FLAME SPREAD CLASSIFICATION OF MATERIALS

802.1 Testing. Tests shall be made by an approved testing agency to establish surface–burning characteristics and to show that materials when cemented or otherwise fastened in place will not readily become detached when subjected to room temperatures of 300°F. (149°C.) for 25 minutes. Surface–burning characteristics shall be determined by one of the following methods:

1. The surface–burning characteristics as set forth in U.B.C. Standard 8–1.

2. Any other recognized method of test procedure for determining the surface–burning characteristics of finish materials that will give comparable results to those specified in method Item 1 above.

3. The room fire growth contribution for textile wall coverings as set forth in U.B.C. Standard 8–2.

802.2 Classification. The classes of materials based on their flame–spread index shall be as set forth in Table 8–A. The smoke density shall be no greater than 450 when tested in accordance with U.B.C. Standard 8–1 in the way intended for use.

Section 803 — APPLICATION OF CONTROLLED INTERIOR FINISH

Interior finish materials applied to walls and ceilings shall be tested as specified in Section 802 and regulated for purposes of limiting surface–burning by the following provisions:

1. When walls and ceilings are required by any provision in this code to be of fire–resistive or noncombustible construction, the finish material shall be applied directly against such fire–resistive or noncombustible construction or to furring strips not exceeding $1^3/_4$ inches (44 mm) applied directly against such surfaces. The intervening spaces between such furring strips shall be filled with inorganic or Class I material or shall be fire blocked not to exceed 8 feet (2438 mm) in any direction. See Section 708 for fire blocking.

2. Where walls and ceilings are required to be of fire–resistive or noncombustible construction and walls are set out or ceilings are dropped distances greater than specified in paragraph 1 of this section, Class I finish materials shall be used except where the finish materials are protected on both sides by automatic sprinkler systems or are attached to a noncombustible backing or to furring strips installed as specified in paragraph 1. The hangers and assembly members of such dropped ceilings that are below the main ceiling line shall be of noncombustible materials except that in Type III and Type V construction, fire–retardant–treated wood may be used. The construction of each set–out wall shall be of fire–resistive construction as required elsewhere in this code. See Section 708 for fire blocks and draft stops.

Code Alternate CA803: When set-out walls are required to be of fire-resistive construction, protection may be limited to the room side of concealed spaces formed entirely of noncombustible materials.

3. Wall and ceiling finish materials of all classes as permitted in this chapter may be installed directly against the wood decking or planking of Type IV heavy–timber construction, or to wood furring strips applied directly to the wood decking or planking installed and fire blocked as specified in Item 1.

4. An interior wall or ceiling finish that is not more than $^1/_4$ inch (6.4 mm) thick shall be applied directly against a noncombustible backing.

EXCEPTIONS: 1. Class I finish materials.

2. Finish ((~~M~~))materials where the qualifying tests were made with the material suspended or furred out from the noncombustible backing.

Section 804 — MAXIMUM ALLOWABLE FLAME SPREAD

804.1 General. The maximum flame-spread class of finish materials used on interior walls and ceilings shall not exceed that set forth in Table 8–B.

EXCEPTIONS: 1. Except in Group I Occupancies and in enclosed vertical exitways, Class III may be used in other exitways and rooms as wainscoting extending not more than 48 inches (1219 mm) above the floor and for tack and bulletin boards covering not more than 5 percent of the gross wall area of the room.

2. In other than exit enclosures and Group I, Division 1.1, 1.2 or 2 suites which comply with Code Alternate CA1019, ((~~W~~)) when a sprinkler system complying with U.B.C. Standard 9–1 or 9–3 is provided, the flame-spread classification rating may be reduced one classification, but in no case shall materials having a classification greater than Class III be used.

3. The exposed faces of Type IV–H.T., structural members and Type IV–H.T., decking and planking, where otherwise permissible under this code, are excluded from flame-spread requirements.

804.2 Carpeting on Ceilings. When used as interior ceiling finish, carpeting and similar materials having a napped, tufted, looped or similar surface shall have a Class I flame spread.

Carpeting shall not be used on ceilings in exit enclosures.

Section 805 — TEXTILE WALL COVERINGS

When used as interior wall finish, textile wall coverings, including materials such as those having a napped, tufted, looped, nonwoven, woven or similar surface shall comply with the following:

1. Textile wall coverings shall have a Class I flame spread and shall be protected by automatic sprinklers complying with U.B.C. Standard 9–1 or 9–3, or

2. The textile wall covering shall meet the acceptance criteria of U.B.C. Standard 8–2 when tested using a product mounting system, including adhesive, representative of actual use.

Carpeting and textile wall coverings shall not be used on walls in exit enclosures.

Section 806 — INSULATION

Thermal and acoustical insulation installed on walls or ceilings shall comply with Section 707.

Section 807 — SANITATION

807.1 Floors and Walls in Water Closet Compartment and Showers.

807.1.1 Floors. In other than dwelling units, toilet room floors shall have a smooth, hard nonabsorbent surface such as portland cement, concrete, ceramic tile or other approved material which extends upward onto the walls at least 5 inches (127 mm).

807.1.2 Walls. Walls within 2 feet (610 mm) of the front and sides of urinals and water closets shall have a smooth, hard nonabsorbent surface of portland cement, concrete, ceramic tile or other smooth, hard nonabsorbent surface to a height of 4 feet (1219 mm), and except for structural elements, the materials used in such walls shall be of a type which is not adversely affected by moisture. See Section 2512 for other limitations.

EXCEPTIONS: 1. Dwelling units and guest rooms.

2. Toilet rooms which are not accessible to the public and which have not more than one water closet.

In all occupancies, accessories such as grab bars, towel bars, paper dispensers and soap dishes, provided on or within walls, shall be installed and sealed to protect structural elements from moisture.

807.1.3 Showers. Showers in all occupancies shall be finished as specified in Sections 807.1.1 and 807.1.2 to a height of not less than 70 inches (1778 mm) above the drain inlet. Materials other than structural elements used in such walls shall be of a type which is not adversely affected by moisture. See Section 2512 for other limitations.

807.1.4 Shower doors. For shower doors, see Sections 2406.4 and 2407.

807.2 Water Closet Room Separation. See Section 302.6 for requirements to separate water closet rooms.

Section 808 — INTERIOR FLOOR FINISHES.

808.1 Classification. Interior floor finish materials in an exit enclosure, passageway or corridor shall be tested and classified on the basis of tests conducted in accordance with Appendix IV-A of the Seattle Fire Code as follows:

1. **Class 1 Interior Floor Finish.** Materials having a minimum critical radiant flux of 0.45 watt per square centimeter.

2. **Class 2 Interior Floor Finish.** Materials having a minimum critical radiant flux of 0.22 watt per square centimeter.

808.2 Interior Floor Materials. The maximum radiant flux value classification of interior floor finish materials which are to be installed in an exit enclosure, passageway or corridor shall not exceed that set forth in Table 8-C for the occupancies specified.

EXCEPTIONS: 1. Interior floor finish materials of a traditional type, such as wood, vinyl, linoleum, and other resilient floor covering materials.

2. In other than enclosed exitways, when an approved automatic sprinkler system is installed, Class 2 materials may be used in any area where Class 1 materials are required and the materials need not be classified in areas where Class 2 materials are permitted.

When used as floor finish in exit enclosures, carpeting and similar materials having a napped, tufted, looped or similar surface shall have a Class 1 radiant flux value classification. Carpeting shall not be used in stairways required to be of noncombustible construction as specified for Type I or Type II buildings in Sections 602.4 and 603.4.

All carpeting in schools, nursing homes, day care centers, places of public assembly and in corridors in high rise buildings shall have a Class 2 radiant flux value classification. Interior floor finish materials in hospitals shall have a Class 1 radiant flux value classification. Combustible floor finish is not permitted in rooms occupied by inmates or patients whose personal liberties are forcibly restrained.

808.3 Testing, Identification and Report Availability. Interior floor finishes required to meet the standards of this section shall comply with the testing, classifications, identification and report availability requirements of Appendix IV-A of the Seattle Fire Code.

TABLE 8-A—FLAME-SPREAD CLASSIFICATION

MATERIAL QUALIFIED BY:	
Class	Flame-spread Index
I	0–25
II	26–75
III	76–200

TABLE 8-B—MAXIMUM FLAME-SPREAD CLASS[1,8]

OCCUPANCY GROUP	ENCLOSED VERTICAL EXITWAYS[2]	OTHER EXITWAYS[2]	ROOMS OR AREAS
A	I	II	II[3]
E	I	II	III
I	I	I[4]	II[5]
H	I	II	III[6]
B, F, M and S	I	II[9]	III[9]
R-1	I	II	III
R-3	III	III	III[7]
U	NO RESTRICTIONS		

[1] Foam plastics shall comply with the requirements specified in Section 1001.5. Carpeting on ceilings and textile wall coverings shall comply with the requirements specified in Sections 804.2 and 805, respectively.

[2]"Enclosed vertical exitways" are enclosures as regulated in Section 1009, including horizontal extensions of the enclosure to the exterior of the building. "Other exitways" means exitways other than those regulated by Section 1009. Finish classification is not applicable to interior walls and ceilings of exterior exit balconies.

[3]In Group A, Divisions 3 and 4 Occupancies, Class III may be used.

[4]In Group I, Divisions 2 and 3 Occupancies, Class II may be used or Class III when the Division 2 or 3 is sprinklered.

[5]In rooms in which personal liberties of inmates are forcibly restrained, Class I material only shall be used.

[6]Over two stories shall be of Class II.

[7]Flame–spread provisions are not applicable to kitchens and bathrooms of Group R, Division 3 Occupancies.

[8]See Section 606.2 of the Mechanical Code for flame spread requirements for suspended ventilating ceilings.

[9]See also Section 1005.7, exception 9.

TABLE 8-C—MAXIMUM RADIANT FLUX CLASS

Note: Table 8-C is entirely Seattle amendments and is not underlined.

OCCUPANCY GROUP	ENCLOSED AND OTHER EXITWAYS[1]
A	2
B, F, M, S	2
E	2
H 1-6	1
H-7	2
I	1
R-1	2[2]
R-3	No restrictions
U	No restrictions

[1]Combustible floor finish is not permitted for stairs in Types I and II construction except for stairs of combustible construction which are permitted by either Section 602.4 or 603.4, where finishes are not restricted.

[2]The finish materials on stairs within a dwelling unit are not restricted regardless of the construction of the building.

Section 97. Section 902 of the 1994 Uniform Building Code is amended as follows:

Section 902 — STANDARDS OF QUALITY

Fire–extinguishing systems, including automatic sprinkler systems, Class I, Class II and Class III standpipe systems, special automatic extinguishing systems, basement pipe inlets, smoke–control systems, and smoke and heat vents shall be approved and shall be subject to such periodic tests as may be required.

The standards listed below labeled a "U.B.C. standard" are also listed in Chapter 35, Part II, and are part of this code. The other standards listed below are recognized standards (see Sections 3502 and 3503).

1. **Fire–extinguishing system.**
   1.1 U.B.C. Standard 9–1, Installation of Sprinkler Systems
   1.2 U.B.C. Standard 9–3, Installation of Sprinkler Systems in Group R Occupancies Four Stories or Less
   1.3 N.F.P.A. Standard 13-D as published by the National Fire Protection Association, 1994 edition.

2. **Standpipe systems.**
   U.B.C. Standard 9–2, Standpipe Systems

3. **Smoke control.**
   3.1 U.B.C. Standard 7–2, Fire Tests of Door Assemblies
   3.2 UL 555, Fire Dampers
   3.3 UL 555C, Ceiling Dampers
   3.4 UL 555S, Leakage Rated Dampers for Use in Smoke Control Systems
   3.5 UL 33, Heat Response Links for Fire Protection Service
   3.6 UL 353, Limit Controls

4. **Smoke and heat vents.**

U.B.C. Standard 15–7, Automatic Smoke and Heat Vents

Section 98. Section 904 of the 1994 Uniform Building Code is amended as follows:

Section **904 — FIRE–EXTINGUISHING SYSTEMS**

904.1 Installation Requirements.

904.1.1 General. Fire–extinguishing systems required in this code shall be installed in accordance with the requirements of this section.

Fire hose threads used in connection with fire–extinguishing systems shall be national standard hose thread or as approved by the fire department.

The location of fire department hose connections shall be approved by the fire department.

In buildings used for high–piled combustible storage, fire protection shall be in accordance with the Fire Code.

904.1.2 Standards. Fire–extinguishing systems shall comply with U.B.C. Standards 9–1 and 9–2.

EXCEPTIONS: 1. Automatic fire–extinguishing systems not covered by U.B.C. Standard 9–1 or 9–2 shall be approved and installed in accordance with approved standards.

2. Automatic sprinkler systems may be connected to the domestic water–supply main when approved by the ((~~building official~~)) fire chief, provided the domestic water supply is of adequate pressure, capacity and sizing for the combined domestic and sprinkler requirements. In such case, the sprinkler system connection shall be made between the public water main or meter and the building shutoff valve, and there shall not be intervening valves or connections. The fire department connection may be omitted when approved by the fire department.

3. Automatic sprinkler systems in Group R Occupancies four stories or less may be in accordance with U.B.C. Standard 9–3.

4. The sprinkler alarm valve for an automatic sprinkler system may be omitted when the sprinkler system serves less than 20 heads or where the system is connected to an approved fire alarm system. See U. B. C Standard 9-1.

904.1.3 Modifications. When residential sprinkler systems as set forth in U.B.C. Standard 9–3 are provided, exceptions to, or reductions in, code requirements based on the installation of an automatic fire–extinguishing system are not allowed.

904.2 Automatic Fire–extinguishing Systems.

904.2.1 Where required. An automatic fire–extinguishing system shall be installed in the occupancies and locations as set forth in this section.

For provisions on special hazards and hazardous materials, see the Fire Code.

For requirements for sprinkler systems in woodworking shops and other occupancies which use or generate finely divided combustible material, see Section 306.8.

For requirements for sprinkler systems in the Fire District, see Section 511.

904.2.2 All occupancies except Group R, Division 3 and Group U Occupancies. Except for Group R, Division 3 and Group U Occupancies, an automatic sprinkler system shall be installed:

1. In every story or basement of all buildings when the floor area exceeds 1,500 square feet (139.4 m^2) and there is not provided at least 20 square feet (1.86 m^2) of opening entirely above the adjoining ground level in each 50 lineal feet (15 240 mm) or fraction thereof of exterior wall in the story or basement on at least one side of the building. Openings shall have a minimum dimension of not less than 30 inches (762 mm). Such openings shall be accessible to the fire department from the exterior and shall not be obstructed in a manner that firefighting or rescue cannot be accomplished from the exterior.

When openings in a story are provided on only one side and the opposite wall of such story is more than 75 feet (22 860 mm) from such openings, the story shall be provided with an approved automatic sprinkler system, or openings as specified above shall be provided on at least two sides of an exterior wall of the story.

If any portion of a basement or basement-like story is located more than 75 feet (22 860 mm) from openings required in this section, the basement or basement-like story shall be provided with an approved automatic sprinkler system.

2. At the top of rubbish and linen chutes and in their terminal rooms. Chutes extending through three or more floors shall have additional sprinkler heads installed within such chutes at alternate floors. Sprinkler heads shall be accessible for servicing.

((~~3. In rooms where nitrate film is stored or handled.~~))

((~~4.~~)) 3. In protected combustible fiber storage vaults as defined in the Fire Code.

((~~5. Throughout all buildings with a floor level with an occupant load of 30 or more that is located 55 feet (16 764 mm) or more above the lowest level of fire department vehicle access.~~

~~EXCEPTION: 1. Airport control towers.~~
~~2. Open parking structures.~~
~~3. Group F, Division 2 Occupancies.~~))

4. In waterfront structures as specified in Sections 413.5.3 and 413.6.9.

5. In warehouses, factories, workshops and stores which are not otherwise covered by this section, where height exceeds four stories.

6. In any basement or basement-like story used for automobile parking or for the storage or sale of combustible materials.

EXCEPTIONS: 1. Portions of the basement or basement-like story not containing combustible materials and protected by a one-hour fire-resistive occupancy separation.

2. Storage rooms not exceeding 500 square feet (46 m^2) in area, protected by a one-hour fire-resistive occupancy separation, containing no material classified as a flammable liquid, hazardous material or highly combustible material, and served by exterior fire access or interior access by a one-hour fire-resistive corridor as specified in Section 1005. No more than 3 such rooms shall be permitted in any one basement or basement-like story.

3. In other than a Group U Occupancy, passenger car parking when the ceiling is at least a one-hour occupancy separation; Fire Department access is provided which complies with Section 904.2.2, Item 1; an additional opening, other than an exit stair serving upper floors, is provided opposite the Fire Department access openings; automatic heat detection connected to the building fire alarm system is provided and an approved central station monitor is provided in buildings requiring a fire alarm system.

904.2.3 Group A Occupancies.

904.2.3.1 Drinking establishments. An automatic sprinkler system shall be installed in rooms used by the occupants for the consumption of alcoholic beverages and unseparated accessory uses where the total area of such unseparated rooms and assembly uses exceeds 5,000 square feet (465 m^2). For uses to be considered as separated, the separation shall not be less than as required for a one–hour occupancy separation. The area of other uses shall be included unless separated by at least a one–hour occupancy separation.

904.2.3.2 Basements. An automatic sprinkler system shall be installed in basements and basement-like stories classified as a Group A Occupancy when the basement is larger than 1,500 square feet (139 m^2) in floor area.

904.2.3.3 Exhibition and display rooms. An automatic sprinkler system shall be installed in Group A Occupancies which have more than 12,000 square feet (112 m^2) of floor area which can be used for exhibition or display purposes.

904.2.3.4 Stairs. An automatic sprinkler system shall be installed in enclosed usable space below or over a stairway in Group A, Divisions 2, 2.1, 3 and 4 Occupancies. See Section 1009.6.

904.2.3.5 Multitheater complexes. An automatic sprinkler system shall be installed in every building containing a multitheater complex.

904.2.3.6 Amusement buildings. An automatic sprinkler system shall be installed in all permanent and portable amusement buildings. The main water–flow switch shall be electrically supervised. The sprinkler main cutoff valve shall be supervised. When the amusement building is ((~~temporary~~)) portable, the sprinkler water–supply system may be of an approved temporary type.

EXCEPTION: An automatic sprinkler system need not be provided when the floor area of a ((~~temporary~~)) portable amusement building is less than 1,000 square feet (92.9 m^2) and the exit travel distance from any point is less than 50 feet (15 240 mm).

904.2.3.7 Stages. All stages shall be sprinklered. Such sprinklers shall be provided throughout the stage and in dressing rooms, workshops, storerooms and other accessory spaces contiguous to such stages.

EXCEPTIONS: 1. Sprinklers are not required for stages 1,000 square feet (92.9 m^2) or less in area and 50 feet (1542 mm) or less in height where curtains, scenery or other combustible hangings are not retractable vertically. Combustible hangings shall be limited to a single main curtain, borders, legs and a single backdrop.

2. Under stage areas less than 4 feet (1219 mm) in clear height used exclusively for chair or table storage and lined on the inside with $^5/_8$–inch (16 mm) Type X gypsum wallboard or an approved equal.

904.2.4 Group E Occupancies.

904.2.4.1 General.

WSBC: An automatic fire ((~~sprinkler~~)) extinguishing system shall be installed throughout all buildings ((~~containing~~)) classified as a Group E, Division 1 Occupancy. A minimum water supply meeting the requirements of U. B. C. Standard 9-1 shall be required. The fire chief may reduce fire flow requirements for buildings protected by an approved automatic sprinkler system.

((~~EXCEPTIONS: 1. When each room used for instruction has at least one exit door directly to the exterior at ground level and when rooms used for assembly purposes have at least one half of the required exits directly to the exterior ground level, a sprinkler system need not be provided.~~

~~2. When area separation walls, or occupancy separations having a fire-resistive rating of not less than two hours subdivide the building into separate compartments such that each compartment contains an aggregate floor area not greater than 20,000 square feet (1858 m^2), an automatic sprinkler system need not be provided.~~))

EXCEPTION: Portable school classrooms, provided:

1. The aggregate area of clusters of portable school classrooms does not exceed 5,000 square feet (1465 m^2); and
2. Clusters of portable school classrooms shall be separated as required by Chapter 5.

When not required by other provisions of this chapter, a fire-extinguishing system installed in accordance with U.B.C. Standard 9-1 may be used for increases allowed in Chapter 5.

904.2.4.2 Basements. An automatic sprinkler system shall be installed in basements and basement-like stories classified as Group E, Division 1 Occupancies.

904.2.4.3 Stairs. An automatic fire sprinkler system shall be installed in enclosed usable space below or over a stairway in Group E, Division 1 Occupancies. See Section 1009.6.

904.2.4.4 Boiler Rooms. In every boiler room or room containing a central heating plant below usable space unless separated by a three-hour fire-resistive occupancy separation.

904.2.5 Group H Occupancies.

904.2.5.1 General. An automatic fire–extinguishing system shall be installed in Group H, Divisions 1, 2, 3 and 7 Occupancies.

904.2.5.2 Group H, Division 4 Occupancies. An automatic fire–extinguishing system shall be installed in Group H, Division 4 Occupancies having a floor area of more than 3,000 square feet (279 m^2).

904.2.5.3 Group H, Division 6 Occupancies. An automatic fire–extinguishing system shall be installed throughout buildings containing Group H, Division 6 Occupancies. The design of the sprinkler system shall not be less than that required under U.B.C. Standard 9–1 for the occupancy hazard classifications as follows:

LOCATION	OCCUPANCY HAZARD CLASSIFICATION
Fabrication areas	Ordinary Hazard Group 2
Service corridors	Ordinary Hazard Group 2
Storage rooms without dispensing	Ordinary Hazard Group 2

Storage rooms with dispensing	Extra Hazard Group 2
Exit corridors	Ordinary Hazard Group 2[1]

[1] When the design area of the sprinkler system consists of a corridor protected by one row of sprinklers, the maximum number of sprinklers that needs to be calculated is 13.

904.2.6 Group I Occupancies. An automatic sprinkler system shall be installed in Group I Occupancies.

WSBC: Listed quick-response sprinklers shall be installed in light hazard areas in accordance with their listing.

EXCEPTION: In jails, prisons and reformatories, the piping system may be dry, provided a manually operated valve is installed at a continuously monitored location. Opening of the valve will cause the piping system to be charged. Sprinkler heads in such systems shall be equipped with fusible elements or the system shall be designed as required for deluge systems in U.B.C. Standard 9-1.

904.2.7 Group M Occupancies. An automatic sprinkler system shall be installed in retail sales rooms classed as Group M Occupancies and in rooms for storage of combustible materials where the floor area exceeds 12,000 square feet on any floor or 24,000 square feet on all floors or in Group M retail sales occupancies more than three stories in height. The area of mezzanines shall be included in determining the areas where sprinklers are required.

An automatic sprinkler system shall be installed in liquor stores.

((~~904.2.8 Group R, Division 1 Occupancies. An automatic sprinkler system shall be installed throughout every apartment house three or more stories in height or containing 16 or more dwelling units, every congregate residence three or more stories in height or having an occupant load of 20 or more, and every hotel three or more stories in height or containing 20 or more guest rooms. Residential or quick-response standard sprinklers shall be used in the dwelling units and guest room portions of the building.~~))

904.2.8 Group R Occupancies.

904.2.8.1. General. An automatic sprinkler system shall be installed in any Group R occupancy hereafter constructed which does not have approved fire department access, which does not have adequate fire flow or which is located more than 500 feet (152 400 mm) from the nearest hydrant.

EXCEPTION: For Group R, Division 3 Occupancies, the fire chief may authorize a greater distance, but in no case more than 1,000 feet (304 800 mm) to the nearest hydrant.

904.2.8.2. Group R, Division 1 Occupancies. An automatic sprinkler system shall be installed in Group R, Division 1 Occupancies as follows:

1. Any building having three or more stories of height; or

2. Any building having two floors of Group R, Division 1 Occupancy located above any occupancy other than:

   2.1 Group U;

   2.2 Group S, Division 3 parking garage; or

   2.3 Storage, mechanical or laundry or similar rooms accessory to the Group R, Division 1 occupancy.

3. Any apartment building containing five or more dwelling units; or

4. Any hotel containing ten or more guest rooms.

5. Any congregate residence of 50 or more occupants.

EXCEPTION: An automatic sprinkler system shall not be required by Item 1 or 2 above when the building contains no more than two dwelling units.

Interpretation I904.2a: Determination of Stories. For the purpose of this section, in mixed occupancy buildings, the number of stories shall be determined based on the total building, not just those stories occupied by the Group R, Division 1 Occupancy, provided other occupancies shall be sprinklered when specifically required for each occupancy.

Interpretation I904.2b: Area Separation Walls. Area separation walls may be used as provided in Section 504 of this code provided, for the purpose of this subsection, the total number of dwelling units or total number of guest rooms shall be determined based on the complete, attached building regardless of any area separation walls.

Interpretation I904.2c: Sprinkler Systems. Sprinkler systems installed in Group R, Division 3 occupancies may comply with NFPA Standard 13D. Sprinkler systems installed in Group R, Division 1 occupancies may be installed in accordance with NFPA Standard 13R (Uniform Building Code Standard No. 9-3); however, provided where a sprinkler system is required throughout, the system shall comply with NFPA 13 (Uniform Building Code Standard No. 9-1). With either standard, residential sprinkler heads shall be used in the dwelling unit and guest room portions of the building.

Sprinkler systems which have 100 or more sprinkler heads shall comply with Section 904.3.

904.2.9 Group S Occupancies. An automatic sprinkler system shall be installed in liquor warehouses.

See also Section 904.2.2, Item 6.

904.3 Sprinkler System Monitoring and Alarms.

904.3.1 Where required. All valves controlling the water supply for automatic sprinkler systems and water–flow switches on all sprinkler systems shall be electrically monitored where the number of sprinklers are:

1. Twenty or more in Group I, Divisions 1.1 and 1.2 Occupancies.

2. One hundred or more in all other occupancies.

Valve monitoring and water–flow alarm and trouble signals shall be distinctly different and shall be automatically transmitted to an approved central station, remote station or proprietary monitoring station as defined by national standards, or, when approved by the building official with the concurrence of the chief of the fire department, sound an audible signal at a constantly attended location.

EXCEPTION: Underground key or hub valves in roadway boxes provided by the municipality or public utility need not be monitored.

904.3.2 Alarms. An approved audible sprinkler flow alarm shall be provided on the exterior of the building in an approved location. An approved audible sprinkler flow alarm to alert the occupants shall be provided in the interior of the building in a normally occupied location. Actuation of the alarm shall be as set forth in U.B.C. Standard 9–1.

904.4 Permissible Sprinkler Omissions. Subject to the approval of the building official and with the concurrence of the chief of the fire department, sprinklers may be omitted in rooms or areas as follows:

1. When sprinklers are considered undesirable because of the nature of the contents or in rooms or areas which are of noncombustible construction with wholly noncombustible contents and which are not exposed by other areas. Sprinklers shall not be omitted from any room merely because it is damp, of fire–resistive construction or contains electrical equipment.

2. Sprinklers shall not be installed when the application of water or flame and water to the contents may constitute a serious life or fire hazard, as in the manufacture or storage of quantities of aluminum powder, calcium carbide, calcium phosphide, metallic sodium and potassium, quicklime, magnesium powder and sodium peroxide.

3. Safe deposit or other vaults of fire–resistive construction, when used for the storage of records, files and other documents, when stored in metal cabinets and transformer vaults as specified in Section 414.

4. Communication equipment areas under the exclusive control of a public communication utility agency, provided:

4.1 The equipment areas are separated from the remainder of the building by one–hour fire–resistive occupancy separation; and

4.2 Such areas are used exclusively for such equipment; and

4.3 An approved automatic smoke–detection system is installed in such areas and is supervised by an approved central, proprietary or remote station service or a local alarm which will give an audible signal at a constantly attended location; and

4.4 Other approved fire–protection equipment such as portable fire extinguishers or Class II standpipes are installed in such areas.

5. Other approved automatic fire–extinguishing systems may be installed to protect special hazards or occupancies in lieu of automatic sprinklers.

Interpretation I904.4: Examples of the "special hazards or occupancies" referred to in Section 904.4, item 5 are escalator gear rooms containing electrical switches, and areas occupied by electrical generating, transforming apparatus and switch boards.

904.5 Standpipes.

904.5.1 General. Standpipes shall comply with the requirements of this section and U.B.C. Standard 9–2.

904.5.2 Where required. Standpipe systems shall be provided as set forth in Table 9–A.

904.5.3 Location of Class I standpipes. There shall be a Class I standpipe outlet connection at every floor–level landing of every required stairway above or below grade and on each side of the wall adjacent to the exit opening of a horizontal exit except as exempted by footnote 5 of Table 9-A. Outlets at stairways shall be located within the exit enclosure or, in the case of pressurized enclosures, within the vestibule or exterior balcony, giving access to the stairway.

Risers and laterals of Class I standpipe systems not located within an enclosed stairway or pressurized enclosure shall be protected by a degree of fire resistance equal to that required for vertical enclosures in the building in which they are located.

EXCEPTION: In buildings equipped with an approved automatic sprinkler system, risers and laterals which are not located within an enclosed stairway or pressurized enclosure need not be enclosed within fire–resistive construction.

Code Alternate CA904.5a: In other than buildings subject to Section 403, where two stairways are required, a single standpipe may be permitted with the approval of the building official and the fire chief, provided the standpipe is located in the stairway that extends to the roof, the floor area is less than 7,500 square feet (696 m^2) per floor, and all portions of the floor area are within 150 feet (45 720 mm) of hose travel distance of the standpipe.

Code Alternate CA904.5b: In other than buildings subject to Section 403, standpipes at horizontal exits may be omitted with the approval of the building official and fire chief provided standpipes are located in all required stairways, the floor area on each side of the horizontal exit is less than 7,500 square feet (696 m^2) per floor, and all portions of the floor area are within 150 feet (45 720 mm) of hose travel distance of a standpipe.

There shall be at least one outlet above the roof line when the roof has a slope of less than 4 units vertical in 12 units horizontal (33.3% slope).

In buildings where more than one standpipe is provided, the standpipes shall be interconnected at the bottom.

904.5.4 Location of Class II standpipes. Class II standpipe outlets shall be accessible and shall be located so that all portions of the building are within 30 feet (9144 mm) of a nozzle attached to 100 feet (30 480 mm) of hose.

In Group A, Divisions 1 and 2.1 Occupancies, with occupant loads of more than 1,000, outlets shall be located on each side of any stage, on each side of the rear of the auditorium and on each side of the balcony.

Fire–resistant protection of risers and laterals of Class II standpipe systems is not required.

904.5.5 Location of Class III standpipes. Class III standpipe systems shall have outlets located as required for Class I standpipes in Section 904.5.3 and shall have Class II outlets as required in Section 904.5.4.

Risers and laterals of Class III standpipe systems shall be protected as required for Class I systems.

EXCEPTIONS: 1. In buildings equipped with an approved automatic sprinkler system, risers and laterals which are not located within an enclosed stairway or pressurized enclosure need not be enclosed within fire–resistive construction.

2. Laterals for Class II outlets on Class III systems need not be protected.

In buildings where more than one Class III standpipe is provided, the standpipes shall be interconnected at the bottom.

904.6 Buildings under Construction.

904.6.1 General. During the construction of a building and until the permanent fire–extinguishing system has been installed and is in service, fire protection shall be provided in accordance with this section.

904.6.2 Where required. Every building ((~~four~~)) six stories or more in height shall be provided with not less than one standpipe for use during construction. Such standpipes shall be installed when the progress of construction is not more than ((~~35~~)) 50 feet (((~~10-668~~)) 15 240 mm) in height above the lowest level of fire department access. Such standpipe shall be provided with fire department hose connections at accessible locations adjacent to usable stairs and the standpipe outlets shall be located adjacent to such usable stairs. Such standpipe systems shall be extended as construction progresses to within one floor of the highest point of construction having secured decking or flooring.

In each floor there shall be provided a $2^1/_2$–inch (63.5 mm) valve outlet for fire department use. Where construction height requires installation of a Class III standpipe, fire pumps and water main connections shall be provided to serve the standpipe.

904.6.3 Temporary standpipes. Temporary standpipes may be provided in place of permanent systems if they are designed to furnish a minimum of ((~~500~~)) 75 gallons (((~~1893~~)) 284 L) of water per minute at 50 pounds per square inch (345 kPa) pressure with a standpipe size of not less than 4 inches (102 mm). All outlets shall not be less than $2^1/_2$ inches (63.5 mm). Pumping equipment sufficient to provide this pressure and volume shall be available at all times when a Class III standpipe system is required.

904.6.4 Detailed requirements. Standpipe systems for buildings under construction shall be installed as required for permanent standpipe systems.

((~~**904.7 Basement Pipe Inlets.** For basement pipe inlet requirements, see Appendix Section 907.~~))

Section 99. Section 905.1 of the 1994 Uniform Building Code is amended as follows:

905.1 Scope and Purpose. This section applies to mechanical or passive smoke–control systems when they are required by other provisions of this code. The purpose of this chapter is to establish minimum requirements for the design, installation and acceptance testing of smoke–control systems which are intended to provide a tenable environment for the evacuation or relocation of occupants. These provisions are not intended for the preservation of contents or for assistance in fire–suppression or overhaul activities. Smoke–control systems need not comply with the requirements of Section 609 in the Mechanical Code unless their normal use would otherwise require compliance. Nothing within these requirements is intended to apply when smoke control is not otherwise required by this code. Smoke–control systems are not a substitute for sprinkler protection.

Code Alternate CA905: Smoke control systems which comply with the following in lieu of Section 905 may be approved for high-rise buildings.

1. **Building Ventilation.** Natural or mechanical ventilation for the removal of products of combustion shall be provided in every story and basement and shall consist of one of the following:

1.1. Easily identifiable, manually operable windows or panels shall be distributed around the perimeter of the building at not more than 50-foot (15 240 mm) intervals. The area of operable windows or panels shall not be less than 20 square feet per 50 linear feet (15 240 mm) of perimeter.

EXCEPTIONS: 1. In Group R, Division 1 hotel occupancies, each guest room or suite having an exterior wall may be provided with 2 square feet (.19 m^2) of venting area in lieu of the area specified above.

2. Windows may be of fixed tempered glass provided that no coating or film is applied which will modify the natural breaking characteristics of the glass.

1.2. The mechanical air-handling equipment may be designed to accomplish smoke removal in lieu of the requirements of Item A above. Under fire conditions, the return and exhaust air shall be moved directly to the outside without recirculation to other sections of the building. The air-handling system shall provide a minimum of one exhaust air change each 10 minutes for the area involved.

1.3. Any other approved design which will produce equivalent results.

2. Emergency Shaft Pressurization. Shafts shall be protected by an emergency shaft pressurization system complying with following:

2.1. All elevator shafts shall be pressurized to 0.10 inch of water column. Enclosed stairways shall be pressurized to 0.15 inch of water column. Other vertical shafts may be required to be pressurized as determined by the building official at the predesign conference.

EXCEPTION: Subject to the approval of the building official, pressurization may be omitted for elevators and enclosed stairways less than 75 feet (22 860 mm) in height.

2.2. The emergency shaft pressurization shall be activated by a fire alarm system on each floor located in a manner approved by the building official and the fire chief.

2.3. Areas separated by two-hour enclosure walls served by common ventilation equipment shall have automatic-closing dampers to prevent loss of pressurization.

2.4. Emergency pressurization equipment and its duct work located within the building shall be separated from other portions of the building by a minimum of two-hour fire-resistive construction. Duct work shall be constructed of noncombustible materials conforming to the requirements of the Seattle Mechanical Code.

2.5. Shaft pressurization air intakes shall be located at the exterior of the building.

EXCEPTION: Intakes for elevator shaft pressurization may be located within the building provided they shall be located no more than 20 feet (6096 mm) from major openings in the building exterior such as loading docks and vehicular entrances. Such intake shall be provided with smoke detectors which shall deactivate the pressurization system for that shaft.

2.6. Whenever emergency shaft pressurization is activated, all horizontal exit doors which have hold-open devices shall be automatically released to close.

2.7. Other measures to prevent loss of pressurization shall be provided in the design and construction of shafts, such as quality of workmanship and caulking of penetrations and joints.

2.8. Enclosed stairways shall be equipped with a barometric dampered relief opening at the top and the stairway shall be supplied mechanically with sufficient air to discharge a minimum of 2,500 cubic feet per minute through the relief opening while maintaining a minimum positive pressure of 0.15-inch water column in the shaft relative to atmospheric pressure with all doors closed. Supply air ducts shall be enclosed in construction at least equivalent to that of the stair enclosure between the exterior of the building and the stair enclosure. Activation of the mechanical equipment shall be initiated by a smoke detector installed outside the stair enclosure and within 15 feet (4572 mm) of the enclosure door or in accordance with paragraph 2 above. Such equipment shall also be activated by actuation of the automatic sprinkler system.

Section 100. Section 905.14 of the 1994 Uniform Building Code is amended as follows:

905.14 Response Time. Smoke–control system activation shall be initiated immediately after receipt of an appropriate automatic or manual activation command. Smoke–control systems shall activate individual components (such as dampers and fans) in the sequence necessary to prevent physical damage to the fans, dampers, ducts and other equipment. The total response time for ((~~individual components~~)) all systems to achieve their desired operating mode shall not exceed ((~~the following:~~)) 60 seconds.

((~~1. Control air isolation valves~~	~~Immediately~~
~~2. Smoke damper closing~~	~~15 seconds~~
~~3. Smoke damper opening~~	~~15 seconds maximum~~
~~4. Fan starting (energizing)~~	~~15 seconds maximum~~
~~5. Fan stopping (de-energizing)~~	~~Immediately~~
~~6. Fan volume modulation~~	~~30 seconds maximum~~
~~7. Pressure control modulation~~	~~15 seconds maximum~~
~~8. Temperature control safety override~~	~~Immediately~~
~~9. Positive indication of status~~	~~15 seconds maximum~~))

For purposes of smoke control, the firefighter's control panel response time shall be the same for automatic or manual smoke–control action initiated from any other building control point.

Section 101. Section 905.15 of the 1994 Uniform Building Code is amended as follows:

905.15 Acceptance Testing.

905.15.1 General. Devices, equipment, components and sequences shall be individually tested. These tests, in addition to those required above or by other provisions of this code, shall consist of determination of function, sequence and, where applicable, capacity of their installed condition.

See Section 1701.5 for special inspection requirements.

905.15.2 Detection devices. Smoke or fire detectors which are a part of a smoke–control system shall be tested in accordance with the Fire Code in their installed condition. When applicable, this testing shall include verification of airflow in both minimum and maximum conditions.

905.15.3 Ducts. Ducts which are part of a smoke–control system shall be traversed using generally accepted practices to determine actual air quantities.

905.15.4 Dampers. Dampers shall be tested for function in their installed condition.

905.15.5 Inlets and outlets. Inlets and outlets shall be read using generally accepted practices to determine air quantities.

905.15.6 Fans. Fans shall be examined for correct rotation. Measurements of voltage, amperage, revolutions per minute and belt tension shall be made.

905.15.7 Smoke barriers. Measurements using inclined manometers shall be made of the pressure differences across smoke barriers. Such measurements shall be conducted for each possible smoke–control condition.

905.15.8 Controls. Each smoke zone, equipped with an automatic initiation device, shall be put into operation by the actuation of one such device. Each additional such device within the zone shall be verified to cause the same sequence but the operation of fan motors may be bypassed to prevent damage.

Control sequences shall be verified throughout the system, including verification of override from the firefighter's control panel and simulation of standby power conditions.

905.15.9 Reports. A complete report of testing shall be prepared by the required special inspector or special inspection agency. The report shall include identification of all devices by manufacturer, nameplate data, design values, measured values and identification tag or mark. The report shall be reviewed by the responsible designer, and when satisfied that the design intent has been achieved, the responsible designer shall affix the designer's signature and date to the report with a statement as follows:

> I have reviewed this report and by personal knowledge and on–site observation certify that the smoke–control system is in substantial compliance with the design intent, and to the best of my understanding complies with requirements of the code.

A copy of the final report shall be filed with the building official and an identical copy shall be maintained in an approved location at the building.

905.15.10 Identification and documentation. Charts, drawings and other documents identifying and locating each component of the smoke–control system, and describing their proper function and maintenance requirements shall be maintained on file at the building with the above–described report.

Devices shall have an approved identifying tag or mark on them consistent with the other required documentation and shall be dated indicating the last time they were successfully tested and by whom.

Section 102. Section 906.1 of the 1994 Uniform Building Code is amended as follows:

906.1 When Required. Smoke and heat vents complying with U.B.C. Standard 15–7 or fixed openings shall be installed in accordance with the provisions of this section as follows:

1. In single–story Groups B, F, M and S Occupancies having over 50,000 square feet (4645 m^2) in undivided area.

EXCEPTIONS: 1. Office buildings and retail sales areas where storage does not exceed 12 feet (3658 mm) in height.

2. Group S, Division 2 Occupancies used for bulk frozen food storage when the building is protected by a complete automatic sprinkler system.

2. In Group H, Divisions 1, 2, 3, 4 or 5 Occupancies any of which are over 15,000 square feet (1394 m^2) in single floor area.

3. In atria as required by Section 402.2.

For requirements on smoke and heat venting in buildings with high–piled combustible stock, see the Fire Code.

For requirements for venting in stage areas, see Section 405.3.3.

Section 103. Section 906.3 of the 1994 Uniform Building Code is amended as follows:

906.3 Types of Vents. Vents shall be fixed in the open position or vents shall be activated by temperature and shall open automatically in the event of fire.

Fixed openings may consist of skylights or other openings which provide venting directly to exterior above the plane of the main roof in which they are located. Vents shall meet the design criteria of this subsection regarding elevation, and Section 906.5 of this section regarding venting area, dimensions, spacing and venting ratios. The building official may require documentation of the design to assure proper performance of required venting.

Temperature activation of vents shall be at or near the highest elevation of the ceiling and in no case lower than the upper one third of the smoke curtain. Where plain or tempered glass is used, provisions shall be made to protect the occupants from glass breakage. In no case shall vents be located closer than 20 feet (6096 mm) to an adjacent property line.

Section 104. Table 9-A of the 1994 Uniform Building Code is amended as follows:

TABLE 9-A—STANDPIPE REQUIREMENTS

OCCUPANCY[13] × 304.8 for mm × 0.0929 for m^2	NONSPRINKLERED BUILDING[1] Standpipe Class	NONSPRINKLERED BUILDING[1] Hose Requirement	SPRINKLERED BUILDING[2,3] Standpipe Class	SPRINKLERED BUILDING[2,3] Hose Requirement
1. Occupancies exceeding ((~~150~~)) 75 ft. in height[10] ((~~and more than one story~~))	III[8,9]	Yes[5]	I[8,9]	No
2. Occupancies 4 stories or more but less than ((~~150~~)) 75 ft. in height, except Group R, Division 3[7]	[I[9,11] and II[4]] (or III[8,9])	Yes[5]	I[9,11] (or III[8,9])	No
3. Group A Occupancies with occupant load exceeding 1,000[6]	II	Yes	No requirement	No
4. Group A, Division 2.1 Occupancies over 5,000 square feet in area used for exhibition	II	Yes	II	Yes
5. Groups I; H; B; S; M; F, Division 1 Occupancies less than 4 stories in height but greater than 20,000 square feet per floor[7, 12]	II[4]	Yes	No requirement[12]	No[12]
6. Stages more than 1,000 square feet in area	II	No	III	No

[1]Except as otherwise specified in Item 4 of this table, Class II standpipes need not be provided in basements having an automatic fire-extinguishing system throughout.

[2]The standpipe system may be combined with the automatic sprinkler system.

[3]Portions of otherwise sprinklered buildings which are not protected by automatic sprinklers shall have Class II standpipes installed as required for the unsprinklered portions.

[4] In open structures where Class II standpipes may be damaged by freezing, the building official may authorize the use of Class I standpipes which are located as required for Class II standpipes.

[5]Hose is required for Class II standpipes only.

[6]Class II standpipes need not be provided in assembly areas used solely for worship.

[7]For the purposes of this table, occupied roofs of parking structures shall be considered an additional story. In parking structures, a tier is a story.

[8]Fire department outlets on Class I and II standpipes need not be provided at grade level or floors below grade when all portions of such floor are within 150 feet (45 720 mm) hose travel distance of grade level exterior doors fronting on streets or yards usable by fire department apparatus.

[9]Class I and III standpipes shall have two 2-1/2 inch (63.5 mm) roof outlets. The outlets shall be a minimum of 10 feet (3 045 mm) from the roof edge, skylight, light well or other opening, unless protected by a 42-inch (1 067 mm) high guardrail or equivalent.

[10]For additional requirements, see Section 403.

[11] The Class I standpipe may be omitted in Group B and Group R, Division 1 Occupancies when primary fire department vehicle access is provided on at least one side within 3 stories of the roof (not over 35 feet (10 668 mm) total height).

[12] See Article 81 of the Fire Code for special requirements for high-piled combustible storage.

13 See Section 413.8 for requirements for standpipes on waterfront structures.

Section 105. Chapter 10 of the 1994 Uniform Building Code is amended as follows:

Chapter 10
MEANS OF EGRESS

Section 1001 — GENERAL

1001.1 Scope and Standards of Quality. Every building or portion thereof shall be provided with exits as required by this chapter.

The standards listed below labeled a "U.B.C. standard" are also listed in Chapter 35, Part II, and are part of this code. The other standards listed below are recognized standards and as such are not adopted as part of this code (see Sections 3502 and 3503).

1. **Power doors.**

1.1 U.B.C. Standard 10–1, Power–operated Exit Doors

1.2 U.B.C. Standard 7–8, Horizontal Sliding Fire Doors Used in an Exit

2. **Stairway numbering system.**

U.B.C. Standard 10–2, Stairway Identification

3. **Hardware.**

U.B.C. Standard 10–4, Panic Hardware

1001.2 Definitions. For the purpose of this chapter, certain terms are defined as follows:

BALCONY, EXTERIOR EXIT, is a landing or porch projecting from the wall of a building, and which serves as a required exit. The long side shall be at least 50 percent open, and the open area above the guardrail shall be so distributed as to prevent the accumulation of smoke or toxic gases.

EXIT is a continuous and unobstructed means of egress to a public way and shall include intervening aisles, doors, doorways, gates, corridors, exterior exit balconies, ramps, stairways, pressurized enclosures, horizontal exits, exit passageways, exit courts and yards.

EXIT COURT is a yard or court providing access to a public way for one or more required exits.

EXIT ENCLOSURE is an enclosed stairway that complies with Section 1009.

EXIT ILLUMINATION is illumination provided to enable persons to easily find and safely travel the means of egress during an emergency and to preclude a space being left in total darkness in the event of a power failure.

EXIT PASSAGEWAY is an enclosed exit connecting a required exit or exit court with a public way.

EXIT PLACARD is a non-illuminated sign or a sign painted on a wall indicating the direction of egress.

EXIT SIGN is an internally-illuminated sign indicating the direction of egress.

EXTERIOR STAIRWAY is a stairway that is ((~~open on two adjacent sides, except for required structural columns and open-type handrails and guardrails. The adjoining open areas shall be either yards, courts or public ways; the other two sides may be enclosed by the exterior walls of the building.~~)) at least 50 percent open on one side or end. The open area shall be a minimum of 28 square feet (2.6 m^2) per floor and so distributed as to prevent accumulation of smoke or toxic gases.

GRADE-LEVEL EXIT is an exit directly to the exterior from a floor that is located within four feet (1219 mm), measured vertically, from adjacent finished ground level.

HORIZONTAL EXIT is an exit from one building into another building on approximately the same level, or through or around a wall constructed as required for a two–hour occupancy separation and which completely divides a floor into two or more separate areas so as to establish an area of refuge affording safety from fire or smoke coming from the area from which escape is made.

INTERIOR STAIRWAY is any stairway not meeting the definition of an exterior stairway.

MULTITHEATER COMPLEX is a building or portion thereof containing two or more motion picture auditoriums which are served by a common lobby.

PANIC HARDWARE is a door–latching assembly incorporating an unlatching device, the activating portion of which extends across at least one half the width of the door leaf on which it is installed.

PRIVATE STAIRWAY is a stairway serving one tenant only.

PUBLIC WAY is any street, alley or similar parcel of land essentially unobstructed from the ground to the sky which is deeded, dedicated or otherwise permanently appropriated to the public for public use and having a clear width of not less than 10 feet (3048 mm).

SMOKE–PROTECTED ASSEMBLY SEATING is ((~~seating served by means of egress which is not subject to blockage by smoke accumulation within or under a structure.~~)) an assembly area wherein the roof is not less than 15 feet (4.5 m) above the highest cross aisle or seat row, and having smoke-actuated venting facilities within that part of the roof sufficient to maintain the level of smoke at least 6 feet (183 cm) above the highest seat or walking level.

SPIRAL STAIRWAY is a stairway having a closed circular form in its plan view with uniform section shaped treads attached to and radiating about a minimum diameter supporting column. The effective tread is delineated by the nosing radius line, the exterior arc (center line of railing) and the overlap radius line (nosing radius line of tread above). Effective tread dimensions are taken along a line perpendicular to the center line of the tread.

TRAVEL DISTANCE is the total length of the exit path an occupant must travel from any point within the occupied portions of a building to reach an exterior exit door, horizontal exit door, exit passageway door or an enclosed exit stairway door.

1001.3 Exit Obstruction. Obstructions shall not be placed in the required width of an exit except projections permitted by this chapter.

1001.4 Changes in Elevation. Elevation changes in an exit shall comply with Section 1006.3 or 1007.

Within a building, changes in elevation of less than 12 inches (305 mm) along an exit serving an occupant load of 10 or more shall be by ramps.

EXCEPTION: Group R, Division 3 Occupancies and along aisles adjoining seating areas.

1001.5 Guardrails. See Section 509 for guardrail requirements.

1001.6 Yards, Patios and Courts. Yards, patios, courts and similar outdoor areas accessible to and usable by the building occupants shall be provided with exits as required by this chapter. The occupant load of such outdoor areas shall be assigned by the building official in accordance with their anticipated use. When outdoor areas are to be used by persons in addition to the occupants of the building, and exits from the outdoor areas pass through the building, exit requirements for the building shall be based on the sum of the occupant loads of the building plus the outdoor areas.

EXCEPTIONS: 1. Outdoor areas used exclusively for service of the building may have only one exit.
2. Outdoor areas associated with Group R, Division 3 Occupancies.

1001.7 Building Accessibility. In addition to provisions of this chapter, exits which provide access to, or egress from, buildings for persons with disabilities shall also comply with Chapter 11 of the Washington State Building Code.

1001.8 Elevators or Escalators. Elevators or escalators shall not be used as a required exit, unless otherwise approved by the building official.

Section 1002 — OCCUPANT LOAD

1002.1 Determination of Occupant Load.

1002.1.1 Areas to be included. In determining the occupant load, all portions of a building shall be presumed to be occupied at the same time.

EXCEPTION: Accessory use areas which ordinarily are used only by persons who occupy the main areas of an occupancy shall be provided with exits as though they are completely occupied, but their occupant load need not be included in computing the total occupant load of the building.

Interpretation I1002.1a: Accessory use areas may include foyers, corridors, halls, toilet facilities, file rooms, storage rooms, closets, stairways, elevator enclosures and other service facilities.

Interpretation I1002.1b: In places of worship containing social halls, occupant load for the purpose of determining occupancy group may be computed as the sum of the areas reasonably expected to be occupied at one time, including principal worship area and classrooms or instructional areas, and principal worship area and social hall, and social hall and classrooms or instructional areas. Exits shall be computed on total capacity.

The occupant load for a building shall be determined in accordance with the provisions of this section.

1002.1.2 General. For areas without fixed seats, the occupant load shall not be less than the number determined by dividing the floor area assigned to that use by the occupant load factor set forth in Table 10–A. Where an intended use is not listed in Table 10–A, the building official shall establish an occupant load factor based on a listed use which most nearly resembles the intended use.

For a building or portion thereof which has more than one use, the occupant load shall be determined by the use which gives the largest number of persons.

The occupant load for buildings or areas containing two or more occupancies shall be determined by adding the occupant loads of the various use areas as computed in accordance with the applicable provisions of this section.

1002.1.3 Fixed seating. For areas having fixed seats and aisles, the occupant load shall be determined by the number of fixed seats installed therein. The required width of aisles serving fixed seats shall not be used for any other purpose.

For areas having fixed benches or pews, the occupant load shall not be less than the number of seats based on one person for each 18 inches (457 mm) of length of pew or bench.

Where booths are used in dining areas, the occupant load shall be based on one person for each 24 inches (610 mm) of booth length or major portion thereof.

1002.1.4 Reviewing stands, grandstands and bleachers. The occupant load for reviewing stands, grandstands and bleachers shall be calculated in accordance with this section and the specific requirements contained in Section 1021.

1002.2 Maximum Occupant Load.

1002.2.1 Assembly occupancies. The maximum occupant load for assembly occupancies shall not exceed the occupant load determined in accordance with Section 1002.1.

> **EXCEPTION:** When approved by the building official, the occupant load for an assembly occupancy may be increased provided the maximum occupant load served does not exceed the capacity of the exit system for such increased number of persons. The building official may require an aisle, seating or fixed equipment diagram to substantiate such an increase, and may require that such diagram be posted.

1002.2.2 Other occupancies. For other than assembly occupancies, an occupant load greater than that determined in accordance with Section 1002.1 is permitted; however, the exit system shall comply with the provisions of this chapter for such increased number of persons.

1002.3 Posting of Room Capacity. Any room having an occupant load of 50 or more where fixed seats are not installed, and which is used for assembly purpose, shall have the capacity of the room posted in a conspicuous place on an approved sign near the main exit from the room. Such signs shall be maintained legible by the owner or the owner's authorized agent and shall indicate the number of occupants permitted for each room use.

1002.4 Revised Occupant Load. After a building is occupied, any change in use or increase in occupant load shall comply with this chapter. See Section 3405.

Section 1003 — EXITS REQUIRED

1003.1 Number of Exits. Every building or usable portion thereof shall have at least one exit, not less than two exits where required by Table 10–A and additional exits as required by this section.

For purposes of this section, basements and occupied roofs shall be provided with exits as required for stories.

((~~EXCEPTION: Occupied roofs on Group R, Division 3 Occupancies may have one exit if such occupied areas are less than 500 square feet (46.45 m^2) and are located no higher than immediately above the second story.~~))

Floors complying with the provisions for mezzanines as specified in Section 507, Item 4, Exception 3, shall be provided with exits as specified therein.

Occupants on ((~~stories above the first and in basements~~)) floors without grade-level exits shall have access to not less than two separate exits from the ((~~story or basement~~)) floor. See Section 1001.2 for definition of grade-level exit.

EXCEPTIONS: 1. Second stories having an occupant load less than 10 may be provided with only one exit.

2. Two or more dwelling units on the second story or in a basement may have access to only one common exit when the total occupant load served by that exit does not exceed 10.

3. Except as provided in Table 10–A, only one exit need be provided ((~~from the second floor or a basement~~)) within and from an individual dwelling unit or a Group R, Division 3 congregate residence.

((~~4. When the third floor within an individual dwelling unit or a Group R, Division 3 congregate residence does not exceed 500 square feet (46.45 m^2), only one exit need be provided from that floor.~~))

((~~5~~)) 4. Floors and basements used exclusively for service of the building may have one exit. For the purposes of this exception, storage rooms, laundry rooms, maintenance offices and similar uses shall not be considered as providing service to the building.

((~~6~~)) 5. Storage rooms, laundry rooms and maintenance offices in basements not exceeding ((~~300~~)) 900 square feet (27.87 m^2) in floor area and a travel distance of less than 50 feet (15 240 mm) may be provided with only one exit.

((~~7~~)) 6. Elevator lobbies may have one exit provided the use of such exit does not require keys, tools, special knowledge or effort.

7. Group B Occupancy office buildings not exceeding two stories in height and not exceeding 3,500 square feet (325 m^2) per floor.

8. Occupied roofs with an occupant load of 10 or less may have one exit.

Code Alternate CA1003.1a: Any dwelling unit which has an exit directly to the street or yard at ground level or by way of an exterior stairway or an enclosed stairway with fire-resistance rating of one hour or more serving that dwelling unit only and not communicating with any floor below the floor of exit discharge or other area not a part of the dwelling unit served may have a single exit.

Code Alternate CA1003.1b: Any Group R building having not more than four stories of residential use may have a single exit under the following conditions:

1. There are no more than four dwelling units on any floor.

2. The building shall be of not less than one-hour fire-resistive construction and shall also be protected throughout by an automatic sprinkler system. The sprinkler system shall conform to U.B.C. Standard 9-1. Residential type sprinkler heads shall be used in all habitable spaces in each dwelling unit.

3. There shall be no more than two single exit stairway conditions on the same property.

4. A smokeproof stairway enclosure, a stairway pressurized in accordance with Section 711.7, or an exterior stairway shall be provided. Doors in pressurized stairways shall swing into the stairway regardless of the occupant load served, provided that doors from the stairway to the building exterior may swing in the direction of exit travel.

5. A corridor shall separate each dwelling unit entry/exit door from the door to an enclosed stairway on each floor. Dwelling unit doors shall not open directly into an enclosed stairway. Dwelling unit doors may open directly into an exterior stairway.

6. There shall be no more than 20 feet (6096 mm) of travel distance to the exit stairway from the entry/exit door of any dwelling unit.

7. The exit shall not terminate in an exit court where the court depth exceeds the court width unless it is possible to exit in either direction to the public way.

8. Elevators shall be pressurized in accordance with Section 711.7 or shall open into elevator lobbies. Elevator lobbies shall be separated from the remainder of the building and from the exit stairway with construction as required for corridors in Section 1005.7. Doors shall be automatic closing actuated by smoke detector. Where approved by the building official, natural ventilation may be substituted for pressurization where the ventilation would prevent the accumulation of smoke or toxic gases.

9. Other occupancies may be permitted in the same building provided they comply with all the requirements of this code. Except for parking garages accessory to the Group R Occupancy, other occupancies shall not communicate with the Group R occupancy portion of the building or with the single-exit stairway.

For special requirements see the following sections: Group A, Section 1016; Group E, Section 1017; Group H, Section 1018; Group I, Section 1019; Rooms Containing Fuel–fired Equipment and Cellulose Nitrate Handling Rooms, Section 1020; Reviewing Stands, Grandstands and Bleachers, Section 1021; Laboratories, Sections 304.2.2 and 305.2.4; and Open Parking Garages, Section 311.9.

Every ((~~story~~)) floor or portion thereof having an occupant load of 501 to 1,000 shall not have less than three exits.

Every ((~~story~~)) floor or portion thereof having an occupant load of 1,001 or more shall not have less than four exits.

The number of exits required from any ((~~story~~)) floor of a building shall be determined by using the occupant load of that ((~~story~~)) floor.

The maximum number of exits required for any ((~~story~~)) floor shall be maintained until egress is provided from the structure. (See Section 1010.)

1003.2 Width. The total width of exits in inches (mm) shall not be less than the total occupant load served by ((~~an exit~~)) the exits multiplied by 0.3 (7.62) for stairways and 0.2 (5.08) for other exits nor less than specified elsewhere in this code. Such widths of exits shall be divided approximately equally among the separate exits.

The maximum exit width required from any ((~~story~~)) floor of a building shall be maintained.

1003.3 Arrangement of Exits. If only two exits are required, they shall be placed a distance apart equal to not less than ((~~one-half~~)) forty percent of the length of the maximum overall diagonal dimension of the building or area to be served measured in a straight line between ((~~exits.~~)) the centerline of the exit doors.

EXCEPTIONS: 1. The separation between exit doors in the exit enclosures which are interconnected by a ((~~one-hour fire-resistive~~)) corridor conforming to the requirements of Section 1005 may be measured along a direct line of travel within the exit corridor. Stair ((~~E~~))enclosure walls shall not be less than ((~~30~~)) 15 feet (9144 mm) apart at any point in a direct line of measurement.

2. Where buildings are constructed in accordance with Section 403, vertical exits may be placed a distance apart equal to not less than 30 percent of the length of the maximum overall diagonal dimension of the building. Exception 1 may be used concurrently.

3. For retail and office tenant spaces in Group B and M Occupancies, exits from the tenant space shall be as far apart as reasonably practicable.

Where three or more exits are required, at least two exits shall be placed a distance apart equal to not less than one half of the length of the maximum overall diagonal dimension of the building or area to be served measured in a straight line between the exits, and the additional exits shall be arranged a reasonable distance apart so that if one becomes blocked the others will be available.

Unless approved by the building official, where two or more exits are required, exit travel shall not pass through an exit enclosure as the only way to reach another exit.

1003.4 Travel Distance. The maximum travel distance shall not exceed 150 feet (45 720 mm), unless otherwise allowed by this section. The maximum travel distance may be increased in accordance with the following:

1. In a building equipped with an automatic sprinkler system throughout, the maximum travel distance may be 200 feet (60 960 mm).

2. The maximum travel distance of 150 feet (45 720 mm) and the maximum travel distance of 200 feet (60 960 mm) allowed by Item 1 may be increased up to an additional 100 feet (30 480 mm) when this increase in travel distance occurs in the last portion of the travel distance and is entirely within a one-hour fire-resistive corridor complying with Section 1005.

3. In one-story buildings classified as Group F, Division 2 or Group S, Division 2 Occupancies, and in one-story Group S, Division 5 Occupancy ((~~airplane~~)) aircraft hangars, the travel distance may be 400 feet (121.9 m) if the building is equipped with an automatic sprinkler system throughout and provided with smoke and heat ventilation as specified in Section 906.

4. In an open parking garage as defined in Section 311.9, the exit travel distance may be 300 feet (91 440 mm) in a building not equipped with an automatic sprinkler system throughout and may be increased to 400 feet (121.9 m) in a building equipped with an automatic sprinkler system throughout. Travel distances may be measured to open stairways which are permitted in accordance with Section 1009.1. When standpipes are required by Chapter 9, additional standpipe connections may be required where the hose travel distance exceeds 150 feet (45 720 mm).

Interpretation I1003.4b: The previous paragraph may apply to Group S, Division 3 garages, or individual floors thereof, which provide openings which comply with the standards of Section 311.9.

Special travel distance provisions are contained in other sections of this code as follows:

1. For atria, see Section 402.4.

2. For ((~~Group B office and Group R, Division 1 Occupancies,~~)) high-rise buildings, see Section 403.

3. For Group E Occupancies, see Section 1017.

4. For Group H Occupancies, see Section 1018.

5. For malls, see Section 404.4.3 and 404.4.5.

1003.5 Exits through Adjoining Rooms. Rooms may have one required exit that passes through an adjoining or intervening room which provides a direct, obvious and unobstructed means of travel to an exit corridor, exterior exit door, horizontal exit, exit passageway or enclosed stairway, provided the total travel distance does not exceed that permitted by other provisions of this code.

EXCEPTIONS: 1. Rooms within dwelling units may exit through more than one intervening room.
2. Rooms with a cumulative occupant load of 10 or less may exit through more than one intervening room.

In other than dwelling units, exits shall not pass through kitchens, store rooms, restrooms, closets or spaces used for similar purposes.

Foyers, lobbies and reception rooms constructed as required for corridors shall not be construed as intervening rooms.

Section 1004 — DOORS

1004.1 General. This section shall apply to every exit door serving an area having an occupant load of 10 or more, or serving hazardous rooms or areas, except that Sections 1004.3, 1004.9, 1004.10 and 1004.11 shall apply to all exit doors regardless of occupant load. Buildings or structures used for human occupancy shall have at least one exterior exit door that meets the requirements of Section 1004.6. Doors and landings at doors which are located within an accessible route of travel shall also comply with Chapter 11 of the Washington State Building Code.

Interpretation I1004.1: Every building or structure used for human occupancy shall have at least one exterior exit door which meets the requirements of 1004.6 that is not an overhead door.

WSBC: Section 1004.2 shall apply to all exit doors within an accessible route of travel regardless of occupant load.

1004.2 Swing and Opening Force. Exit doors that serve an occupant load of 10 or more shall be of the pivoted or side–hinged swinging type. Exit doors shall swing in the direction of exit travel when serving any hazardous area or when the area served has an occupant load of 50 or more. The door shall swing to full–open position when an opening force not to exceed 30 pounds (133.45 N) is applied to the latch side. For other door–opening forces, see Chapter 11 of the Washington State Building Code and Section 905.3. ((~~See Section 3207 for doors swinging over public property.~~))

WSBC: Within an accessible route of travel such force shall not exceed 8.5 pounds (37.8 N) at exterior doors, and shall not exceed 5 pounds (22.24 N) at sliding and folding doors and interior swinging doors. At exterior doors where environmental conditions require greater closing pressure, power-operated doors shall be used within the accessible route.

EXCEPTIONS: 1. Group I, Division 3 Occupancy used as a place of detention.
2. In other than accessible dwelling units, ((D))doors within or serving an individual dwelling unit.
3. Special door conforming with Section 1004.8.
WSBC 4. The opening force at required fire doors within an accessible route may be not greater than 30 pounds (133.45 N).

Double–acting doors shall not be used as exits when any of the following conditions exist:

1. The occupant load served by the door is 100 or more.

2. The door is part of a fire assembly.

3. The door is part of a smoke– and draft–control assembly.

4. Panic hardware is required or provided on the door.

A double–acting door shall be provided with a view panel of not less than 200 square inches (0.129 m^2).

1004.3 Type of Lock or Latch. Exit doors shall be openable from the inside without the use of a key or any special knowledge or effort. Doors shall be openable with no more than one releasing operation.

EXCEPTIONS: 1. In Groups B, F, M and S Occupancies, key–locking hardware may be used on the main exit when the main exit consists of a single door or pair of doors if there is a readily visible, durable sign on or adjacent to the door stating THIS DOOR MUST REMAIN UNLOCKED DURING BUSINESS HOURS. The sign shall be in letters not less than 1 inch (25 mm) high on a contrasting background. When unlocked, the single door or both leaves of a pair of doors must be free to swing without operation of any latching device. Single-cylinder, manually operated bolts are permitted provided they are manually operable on the inside. The use of this exception may be revoked by the building official for due cause.

2. Exit doors from individual dwelling units; Group R, Division 3 congregate residences; and guest rooms of Group R Occupancies having an occupant load of 10 or less may be provided with a night latch, dead bolt or security chain, provided such devices are openable from the inside without the use of a key or tool and mounted at a height not to exceed 48 inches (1219 mm) above the finished floor.

Interpretation I1004.3: When doors are used in pairs the added door leaf, if not required for exit purposes by other provisions of this code, may have manually operated bolts or self-latching flush bolts, provided the door leaf having the bolts shall have no dummy trim on the exit side, thus rendering it readily distinguishable from the required door leaf.

((~~Manually operated edge– or surface–mounted flush bolts and surface bolts are prohibited.~~)) When exit doors are used in pairs and approved automatic flush bolts are used, the door leaf having the automatic flush bolts shall have no doorknob or surface–mounted hardware. The unlatching of any leaf shall not require more than one operation.

EXCEPTIONS: 1. Group R, Division 3 Occupancies.

2. When a pair of doors serving a room not normally occupied are needed for the movement of equipment, manually operated edge or surface bolts or self-latching flush bolts may be used and a door closer need not be provided on the inactive leaf.

1004.4 Panic Hardware. Panic hardware, when installed, shall comply with the requirements of U.B.C. Standard 10–4. The activating member shall be mounted at a height of not less than 30 inches (762 mm) or more than 44 inches (1118 mm) above the floor. The unlatching force shall not exceed 15 pounds (66.72 N) when applied in the direction of exit travel.

When balanced doors are used and panic hardware is required, panic hardware shall be of the push–pad type and the pad shall not extend across more than one half of the width of the door measured from the latch side.

1004.5 Special Locking Arrangements.

1004.5.1 **Special Egress–control Devices.** When approved by the building official, exit doors in Group A libraries other than at main exit doors; Group B; Group E, Division 3; Group F, ((~~Division 1;~~)) Group I, Divisions 1.1, 1.2 and 2; Group M and Group ((~~R, Division 1 congregate residences serving as group care facilities~~)) LC Occupancies may be equipped with approved listed special egress–control devices ((~~of the time delay type~~)), provided the building is protected throughout by an approved automatic sprinkler system and an approved automatic smoke–detection system. Such devices shall conform to all of the following:

1. Automatically deactivate the egress–control device upon activation of either the sprinkler system or the detection system.

2. Automatically deactivate the egress–control device upon loss of electrical power to any one of the following:

2.1 The egress–control device.

2.2 The smoke–detection system.

2.3 Exit illumination as required by Section 1012.

3. Be capable of being deactivated by a signal from a switch located in an approved location.

4. Initiate an irreversible process which will deactivate the egress–control device whenever a manual force of not more than 15 pounds (66.72 N) is applied for two seconds to the panic bar or other door–latching hardware. The egress–control device shall deactivate within an approved time period not to exceed a total of 15 seconds. The time delay established for each egress–control device shall not be field adjustable.

5. Actuation of the panic bar or other door–latching hardware shall activate an audible signal at the door.

6. The unlatching shall not require more than one operation.

A sign shall be provided on the door located above and within 12 inches (305 mm) of the panic bar or other door–latching hardware reading:

KEEP PUSHING. THIS DOOR WILL OPEN IN _____
SECONDS. ALARM WILL SOUND.

Sign letter shall be at least 1 inch (25 mm) in height and shall have a stroke of not less than $^1/_8$ inch (3.2 mm).

Regardless of the means of deactivation, relocking of the egress–control device shall be by manual means only at the door.

WSBC: Exception: Subject to the approval of the building official, special units for the care of dementia patients in nursing homes which are identified and approved by the state agency licensing such units, may use special egress-control devices where a panic bar is not part of the egress-control mechanism.

1004.5.2 Access-controlled egress doors. The building official may approve access-controlled egress doors conforming to the requirements of NFPA 101 Section 5-2.1.6.2 provided:

1. The space is provided with an automatic sprinkler system or a fire alarm system which includes a smoke detector within 15 feet (4572 mm) of the door;

2. The lock, motion sensor, push button and control are listed; and

3. A test description for annual confidence test is provided to the building owner and confidence test unit of the Seattle Fire Marshal's Office.

1004.6 Width and Height. Every required exit doorway shall be of a size as to permit the installation of a door not less than 3 feet (914 mm) in width and not less than 6 feet 8 inches (2032 mm) in height. When installed, exit doors shall be capable of opening so that the clear width of the exit is not less than 32 inches (813 mm). In computing the exit width required by Section 1003.2, the net dimension of the exitway shall be used.

1004.7 Door Leaf Width. A single leaf of an exit door shall not exceed 4 feet (1219 mm) in width.

1004.8 Special Doors. Revolving, sliding and overhead doors shall not be used as required exits.

EXCEPTION: Horizontal sliding doors complying with U.B.C. Standard 7–8 may be used:
1. In elevator lobby separations.
2. Other than Groups A and H Occupancies, where smoke barriers are required.
3. When serving an occupant load of less than 50 in any occupancy other than a Group H Occupancy.

WSBC: Where revolving or overhead doors or turnstiles are used, an adjacent accessible gate or door shall be provided where an accessible route is required by Chapter 11 of the Washington State Building Code.

Power–operated doors complying with U.B.C. Standard 10–1 may be used for exit purposes. Such doors when swinging shall have two guide rails installed on the swing side projecting out from the face of the door jambs for a distance not less than the widest door leaf. Guide rails shall not be less than 30 inches (762 mm) in height with solid or mesh panels to prevent penetration into door swing and shall be capable of resisting a horizontal load at top of rail of not less than 50 pounds per lineal foot (730 N/m).

EXCEPTIONS: 1. Walls or other type separators may be used in lieu of the above guide rail, provided all the criteria are met.

2. Guide rails in industrial or commercial occupancies not accessible to the public may conform with the exception to Section 509.3.

3. Doors swinging toward flow of traffic shall not be permitted for use by untrained pedestrian traffic unless actuating devices start to function at least 8 feet 11 inches (2718 mm) beyond the door in an open position and guide rails extend 6 feet 5 inches (1956 mm) beyond the door in an open position.

Clearances for guide rails shall be as follows:

1. Six inches (152 mm) maximum between rails and leading edge of door at the closest point in its arc of travel.

2. Six inches (152 mm) maximum between rails and the door in an open position.

3. Two inches (51 mm) minimum between rail at hinge side and door in an open position.

4. Two inches (51 mm) maximum between freestanding rails and jamb or other adjacent surface.

1004.9 Floor Level at Doors. Regardless of the occupant load, there shall be a floor or landing on each side of a door. When access for persons with disabilities is required by Chapter 11 of the Washington State Building Code, the floor or landing shall not be more than 1/2 inch (13 mm) lower than the threshold of the doorway. When such access is not required, such dimension shall not exceed 1 inch (25 mm). Landings shall be level except for exterior landings, which may have a slope not to exceed 1/4 unit vertical in 12 units horizontal (2% slope).

EXCEPTIONS: 1. In Group R, Division 3, and Group U Occupancies and within individual units of Group R, Division 1 Occupancies:

1.1 A door may open at the top step of an interior flight of stairs, provided the door does not swing over the top step.

1.2 A door may open at a landing that is not more than 8 inches (203 mm) lower than the floor level, provided the door does not swing over the landing.

1.3 Screen doors and storm doors may swing over stairs, steps or landings.

2. Doors serving building equipment rooms which are not normally occupied.

WSBC: 3. At exterior sliding doors within accessible dwelling units, the floor or landing may be no more than 3/4 inch (19 mm) lower than the threshold of the doorway, including the sliding door tracks, provided that an additional accessible entrance door is provided into the dwelling unit.

1004.10 Landings at Doors. Landings shall have a width not less than the width of the stairway or the width of the door, whichever is the greater. Doors in the fully open position shall not reduce a required dimension by more than 7 inches (178 mm). ((~~When a landing serves an occupant load of 50 or more, doors in any position shall not reduce the landing dimension to less than one half its required width.~~)) Doors in any position shall not encroach on the required stairway width by more than 12 inches (305 mm). Landings shall have a length measured in the direction of travel of not less than 44 inches (1118 mm).

EXCEPTION: In Group R, Division 3, and Group U Occupancies and within individual units of Group R, Division 1 Occupancies, such length need not exceed 36 inches (914 mm).

When doors open over landings, doors in any position shall not reduce the landing length to less than 12 inches (305 mm).

A landing which has no adjoining door, or where the door does not swing over the landing, shall comply with Section 1006.7.

Interpretation I1004.10: Landing length, width and slope shall be measured as specified in Section 1006.7. See Figures 10-1 and 10-2 for illustrations of the requirements of this section.

1004.11 Door Identification. Glass doors shall conform to the requirements specified in Section 2406.

Exit doors shall be marked so that they are readily distinguishable from the adjacent construction.

1004.12 Additional Doors. When additional doors are provided for egress purposes, they shall conform to all provisions of this chapter.

EXCEPTION: Approved revolving doors having leaves which will collapse under opposing pressures may be used in exit situations, provided:

1. Such doors have a minimum width of 6 feet 6 inches (1981 mm).
2. At least one conforming exit door is located adjacent to each revolving door.
3. The revolving door shall not be considered to provide any exit width.

Section 1005 — CORRIDORS AND EXTERIOR EXIT BALCONIES

1005.1 General. This section shall apply to every corridor serving as a required exit for an occupant load of 10 or more except that Section 1005.2 shall apply to all corridors and except as provided in Section 1005.7 for Group R, Division 1 Occupancies. For the purpose of this section, the term "corridor" shall include exterior exit balconies and covered or enclosed walkways, tunnels and malls. Partitions, rails, counters and similar space dividers not over 5 feet 9 inches (1753 mm) in height above the floor shall not be construed to form corridors.

Exit corridors shall not be interrupted by intervening rooms.

EXCEPTION: Foyers, lobbies or reception rooms constructed as required for corridors shall not be construed as intervening rooms.

Corridors which are located within an accessible route of travel shall also comply with Chapter 11 of the Washington State Building Code.

For Group I Occupancies see Section 1019.3.

1005.2 Width. The minimum corridor width shall be determined as specified in Section 1003.2, but shall not be less than 44 inches (1118 mm), except as specified herein. Corridors serving an occupant load of 49 or less shall not be less than 36 inches (914 mm) in width. Except as otherwise required by Chapter 11 of the Washington State Building Code, corridors in Group R, Division 3 Occupancies and within dwelling units in Group R, Division 1 Occupancies shall have a minimum width of 30 inches (762 mm). For special requirements for Groups E and I Occupancies, see Sections 1017 and 1019.

1005.3 Height. Corridors and exterior exit balconies shall have a clear height of not less than 7 feet (2134 mm) measured to the lowest projection from the ceiling.

1005.4 Projections. The required width of corridors shall be unobstructed.

EXCEPTION: Handrails and doors, when fully opened, shall not reduce the required width by more than 7 inches (178 mm). Doors in any position shall not reduce the required width by more than one half. Other nonstructural projections such as trim and similar decorative features may project into the required width $1\frac{1}{2}$ inches (38 mm) on each side.

1005.5 Access to Exits. When more than one exit is required, they shall be so arranged that it is possible to go in either direction from any point in a corridor to a separate exit. ((~~, except for~~)) In other than Group B office occupancies in Types I and II-F.R. construction, dead ends ((~~not exceeding~~)) shall not exceed ((~~20~~)) 25 feet (((~~6096~~)) 7620 mm) in length. In buildings of Type I and II-F.R. construction, areas containing Group B offices may have dead-end corridors not exceeding 75 feet (22 860 mm) in length, provided the cumulative occupant load shall not exceed 50 for all areas for which the dead-end corridor serves as the only exit.

No part of areas open to the public shall be more than 25 feet (7620 mm) from an aisle, or 50 feet (15 240 mm) from an aisle or corridor providing two directions of travel.

1005.6 Changes in Elevation. When a corridor or exterior exit balcony is accessible to the handicapped, changes in elevation of the floor shall be made by means of a ramp, except as provided for doors by Section 1004.9.

1005.7 Construction. Walls of corridors serving a Group R, Division 1 Occupancy, a ((~~or~~)) Group I Occupancy having an occupant load of 10 or more, and walls of corridors serving other occupancies having an occupant load of 30 or more shall be of not less than one-hour fire-resistive construction and the ceilings shall not be less than that required for a one-hour fire-resistive floor or roof system.

EXCEPTIONS: 1. One-story buildings housing Group S, Division 2 Occupancies.

2. Corridors more than 30 feet (9144 mm) in width where occupancies served by such corridors have at least one exit independent from the corridor. (See Chapter 4 for covered malls.)

3. Exterior sides of exterior exit balconies.

4. In Group I, Division 3 Occupancies such as jails, prisons, reformatories and similar buildings with open-barred cells forming corridor walls, the corridors and cell doors need not be fire resistive.

5. Corridor walls and ceilings need not be of fire-resistive construction ((~~within~~)) when serving office spaces having an occupant load of 100 or less when the entire story in which the ((~~space~~)) occupancy is located is equipped with an automatic sprinkler system throughout and an automatic smoke-detection system is installed within the corridor. The actuation of any detector shall activate alarms audible in all areas served by the corridor.

6. In other than Type I or II construction, exterior exit balcony roof assemblies may be of heavy-timber construction without concealed spaces.

7. Within office spaces occupied by a single tenant, partial height partitions which form corridors and which do not exceed 6 feet (1829 mm) in height need not be fire resistive, provided they are constructed in accordance with Section 601.5 and are not more than three fourths of the floor-to-ceiling height.

8. Corridor walls and ceilings need not be of fire-resistive construction ((~~within~~)) when serving office spaces having an occupant load of 100 or less when the building in which the space is located is equipped with an automatic sprinkler system throughout.

9. In office areas located in buildings of Types I or II-F.R. construction, corridor walls need not be of fire resistive construction provided that the corridor side of the corridor walls shall be constructed with finish materials with a maximum flame-spread of Class II as specified in Chapter 8. Finish materials in corridors outside of tenant spaces shall not be reduced to Class III as a result of the provision of sprinklers.

Code Alternate CA1005.7b: In Group M Occupancies, when the floor in question is protected by an automatic sprinkler system throughout, walls and ceilings of corridors need not be of one-hour fire-resistive construction.

When the ceiling of the entire story is an element of a one-hour fire-resistive floor or roof system, the corridor walls may terminate at the ceiling. When the room-side fire-resistive membrane of the corridor wall is carried through to the underside of a fire-resistive floor or roof above, the corridor side of the ceiling may be protected by the use of ceiling materials as required for one-hour floor or roof system construction or the corridor ceiling may be of the same construction as the corridor walls.

Ceilings of noncombustible construction may be suspended below the fire–resistive ceiling.

For wall and ceiling finish requirements, see Table 8–B.

For restrictions on the use of corridors to convey air, see Chapter 10 of the Mechanical Code.

1005.8 Openings.

1005.8.1 Doors. When corridor walls are required to be of one–hour fire–resistive construction by Section 1005.7, every interior door opening shall be protected by a tight–fitting smoke– and draft–control assembly having a fire–protection rating of not less than 20 minutes when tested in accordance with U.B.C. Standard 7–2. Said doors shall not have louvers. The door and frame shall bear an approved label or other identification showing the rating thereof, the name of the manufacturer and the identification of the service conducting the inspection of materials and workmanship at the factory during fabrication and assembly. Doors shall be maintained self–closing or shall be automatic closing by actuation of a smoke detector in accordance with Section 713.2. Smoke– and draft–control door assemblies shall be provided with a gasket so installed as to provide a seal where the door meets the stop on both sides and across the top.

EXCEPTIONS: 1. Viewports may be installed if they require a hole not larger than 1 inch in diameter through the door, have at least a 1/4–inch–thick (6.4 mm) glass disc and the holder is of metal which will not melt out when subject to temperatures of 1,700°F. (927°C.).

2. Protection of openings in the interior walls of exterior exit balconies is not required when it is possible to exit in two directions.

Code Alternate CA1005.8a: Doors in one-hour fire-resistive corridors of Group I, Division 1.1 hospitals need not be maintained self- or automatic-closing provided the corridors and all rooms opening into the corridors are protected by an automatic sprinkler system.

Code Alternate CA1005.8b: Unlisted door frames, in walls of other than noncombustible construction, may be used in conjunction with labeled doors without bearing a label, provided they are fabricated and installed according to the requirements specified in Figures 10-3 through 10-6.

1005.8.2 Openings other than doors. Where corridor walls are required to be of one–hour fire–resistive construction by Section 1005.7, interior openings for other than doors or ducts shall be protected by fixed ((~~glazing listed and labeled for a fire–protection rating of at least three–fourths hour in accordance with Section 713.9.~~)), approved 1/4-inch thick wired glass installed in steel frames. The total area of all openings, other than doors, in any portion of an interior corridor shall not exceed 25 percent of the area of the corridor wall of the room which it is separating from the corridor. For duct openings, see Sections 713.10 and 713.11.

EXCEPTION: Protection of openings in the interior walls of exterior exit balconies is not required when it is possible to exit in two directions.

1005.9 Location on Property. Exterior exit balconies shall not be located in areas where openings are not permitted or where openings are required to be protected due to location on the property.

1005.10 Elevators. Elevators opening into a corridor serving a Group R, Division 1 or Group I Occupancy having an occupant load of 10 or more, or a corridor serving other occupancies having an occupant load of 30 or more shall be provided with an elevator lobby at each floor containing such a corridor. The lobby shall completely separate the elevators from the corridor by construction conforming to Section 1005.7 and all openings into the lobby wall contiguous with the corridor shall be protected as required by Section 1005.8.

EXCEPTIONS: 1. In office buildings classed as Group B Occupancies, separations need not be provided from a street floor lobby, provided the entire street floor is protected with an automatic sprinkler system.

2. Elevators not required to meet the shaft enclosure requirements of Section 711.

3. When additional doors are provided in accordance with Section ((~~3007~~)) 3016.9.

4. Where elevator shafts are pressurized in accordance with Section 711.7, elevator lobbies need not be provided.

Elevator lobbies shall comply with Section 3002.

In fully sprinklered office buildings, corridors may lead through enclosed elevator lobbies if all areas of the building have access to at least one required exit without passing through the elevator lobby.

Section 1006 — STAIRWAYS

1006.1 General. Every stairway having two or more risers serving any building or portion thereof shall conform to the requirements of this section. When aisles in assembly rooms have steps, they shall conform with the provisions in Section 1014.

EXCEPTIONS: 1. Stairs or ladders used only to attend equipment or window wells are exempt from the requirements of this section.

WSBC: 2. Stairs or ladders used within individual dwelling units to gain access to areas 200 square feet (18.6 m^2) or less which do not contain the primary bathroom or kitchen are exempt from the requirements of this section.

WSBC: Stairways located in a building required to be accessible shall also comply with Chapter 11 of the Washington State Building Code.

1006.2 Width. The minimum stairway width shall be determined as specified in Section 1003.2, but shall not be less than 44 inches (1118 mm) except as specified herein and in Chapter 11 of the Washington State Building Code. Stairways serving an occupant load of 49 or less shall not be less than 36 inches (914 mm) in width.

Handrails may project into the required width a distance of 3-1/2 inches (89 mm) from each side of a stairway. Stringers and other projections such as trim and similar decorative features may project into the required width 1-1/2 inches (38 mm) on each side.

1006.3 Rise and Run. The rise of steps shall not be less than 4 inches (102 mm) or greater than 7-1/2 inches (((~~178~~)) 190 mm). Except as permitted in Sections 1006.4 and 1006.6, the run shall not be less than ((~~11~~)) 10 inches (((~~279~~)) 254 mm) as measured horizontally between the vertical planes of the furthermost projection of adjacent treads. Except as permitted in Sections 1006.4, 1006.5 and 1006.6, the largest tread run within any flight of stairs shall not exceed the smallest by more than 3/8 inch (9.5 mm). The greatest riser height within any flight of stairs shall not exceed the smallest by more than 3/8 inch (9.5 mm).

EXCEPTIONS: 1. Private steps and stairways serving an occupant load of less than 10 and stairways to unoccupied roofs may be constructed with an 8–inch–maximum (203 mm) rise and a 9–inch–minimum (229 mm) run.

2. Where the bottom or top riser adjoins a sloping public way, walk or driveway having an established grade and serving as a landing, the bottom or top riser may be reduced along the slope ((~~to less than 4 inches (102 mm) in height with the variation in height of the bottom or top riser not to exceed 3 inches (76 mm) in every 3 feet (914 mm) of stairway width~~)).

WSBC: Where Section 1103.2.2 Exception 2 is used in a building design, the run of stair treads shall not be less than 11 inches (279 mm), as measured horizontally between the vertical planes of the furthermost projections of adjacent tread. The largest tread within any flight of stairs shall not exceed the smallest by more than 3/8 inch (9.5 mm).

1006.4 Winding Stairways. In Group R, Division 3 Occupancies and in private stairways in Group R, Division 1 Occupancies, winders may be used if the required width of run is provided at a point not more than 12 inches (305 mm) from the side of the stairway where the treads are narrower, but in no case shall any width of run be less than 6 inches (152 mm) at any point.

1006.5 Circular Stairways. Circular stairways may be used as an exit, provided the minimum width of run is not less than 10 inches (254 mm) and the smaller radius is not less than twice the width of the stairway. The largest tread width or riser height within any flight of stairs shall not exceed the smallest by more than 3/8 inch (9.5 mm).

1006.6 Spiral Stairways. In Group R, Division 3 and Group U Occupancies and in private stairways within individual units of Group R, Division 1 Occupancies, spiral stairways may be installed. Such stairways may be used as an exit for not more than one floor, balcony or mezzanine; and in Groups B, F-1, M and S-1 Occupancies serving areas of not more than 400 square feet (37 m^2) which are not open to the public. Spiral stairways may also be used as a convenience stairway in Groups B, F, M and S Occupancies when such stairways are not open to the public and are not required for exits ((~~for required exits when the area served is limited to 400 square feet (37.16 m^2)~~)).

The tread must provide a clear walking area measuring at least 26 inches (660 mm) from the outer edge of the supporting column to the inner edge of the handrail. A run of at least 7-1/2 inches (191 mm) is to be provided at a point 12 inches (305 mm) from where the tread is the narrowest. The rise must be sufficient to provide 6–foot 6–inch (1981 mm) headroom. The rise shall not exceed 9-1/2 inches (241 mm).

1006.7 Landings. Every landing shall have a dimension measured in the direction of travel not less than the width of the stairway. Such dimension need not exceed 44 inches (1118 mm) when the stair has a straight run. Landings shall have a slope not steeper than 1 vertical to 48 horizontal. There shall not be more than 12 feet (3658 mm) vertically between landings. For landings with adjoining doors, see Section 1004.10.

WSBC: Stairways shall have landings at the top and bottom.

EXCEPTION: Stairs serving an unoccupied roof are exempt from these provisions.

1006.8 ((~~Basement~~)) Stairways Below Exit Termination When a ((~~basement~~)) stairway to a basement or lower story and a stairway to an upper story terminate in the same exit enclosure, an approved barrier shall be provided to prevent persons from continuing on into the basement or lower story. Directional exit signs shall be provided as specified in Section 1013.

1006.9 Handrails. Stairways shall have handrails on each side, and every stairway required to be more than 88 inches (2235 mm) in width shall be provided with not less than one intermediate handrail for each 88 inches (2235 mm) of required width. Intermediate handrails shall be spaced approximately equally across with the entire width of the stairway.

EXCEPTIONS: 1. Stairways less than 44 inches (1118 mm) in width or stairways serving one individual dwelling unit in Group R, Division 1 or 3 Occupancies or a Group R, Division 3 congregate residence may have one handrail.

WSBC: This exception shall not be used concurrently with the second exception to the first paragraph of Section 1103.2.2 of the Washington State Building Code.

2. Private stairways 30 inches (762 mm) or less in height may have handrails on one side only.

WSBC: This exception shall not be used concurrently with the second exception to the first paragraph of Section 1103.2.2 of the Washington State Building Code.

3. Stairways having less than four risers and serving one individual dwelling unit in Group R, Division 1 or 3, or a Group R, Division 3 congregate residence or serving Group U Occupancies need not have handrails.

The top of handrails and handrail extensions shall be placed not less than 34 inches (864 mm) or more than 38 inches (965 mm) above the nosing of treads and landings. Handrails shall be continuous the full length of the stairs and, except for private stairways, at least one handrail shall extend in the direction of the stair run not less than 12 inches (305 mm) beyond the top riser nor less than a length equal to one tread depth plus 12 inches (305 mm) beyond the bottom riser. Ends shall be returned or shall terminate in newel posts or safety terminals.

The handgrip portion of handrails shall not be less than 1-1/4 (32 mm) inches nor more than 2 inches (51 mm) in cross–sectional dimension or the shape shall provide an equivalent gripping surface. The handgrip portion of handrails shall have a smooth surface with no sharp corners.

Handrails projecting from a wall shall have a space of not less than 1-1/2 inches (38 mm) between the wall and the handrail.

Any recess containing a handrail shall allow a clearance of not less than 18 inches above the top of the rail, and shall be not more than 3 inches (76 mm) in horizontal depth.

Handrails shall not rotate within their fittings.

1006.10 Guardrails. Stairways open on one or both sides shall have guardrails as required by Section 1001.5.

1006.11 Protection of Exterior Wall Openings. Except in Group R, Division 3 Occupancies, all openings in the exterior wall below and within 10 feet (3048 mm), measured horizontally, of an exterior exit stairway or unprotected openings in an interior exit stairway serving a building ((~~over two stories in height~~)) or a floor level having such openings in two or more floors below shall be protected by fixed, self–closing, or automatic–closing fire assemblies having a three–fourths–hour fire–protection rating.

EXCEPTIONS: 1. Openings may be unprotected when two separated exterior stairways serve an exterior exit balcony.

2. Protection of openings is not required for open parking garages conforming to Section 405.

Code Alternate CA1006.11: Buildings having a single means of egress under Code Alternate CA1003.1b shall have no openings within 10 feet (3048 mm) of the stairway other than required exit doors having a one-hour fire-resistive rating. The maximum flame-spread classification of finish materials, as specified in Chapter 8, shall not be reduced in exterior stairways as a result of the provision of sprinklers.

1006.12 Interior Stairway Construction. Interior stairways shall be constructed as specified in Sections 602.4, 603.4, 604.4, 605.4 and 606.4.

Except when enclosed usable space under stairs is prohibited by Section 1009.6, the walls and soffits of the enclosed space shall be protected on the enclosed side as required for one–hour fire–resistive construction.

EXCEPTION: Gypsum wallboard 1/2-inch (13 mm) thick may be used in Group R, Division 3 Occupancies and within individual dwelling units of Group R, Division 1 Occupancies where one-hour fire-resistive construction is not otherwise required throughout.

All required interior stairways which extend to the top floor in any building four or more stories in height shall have, at the highest point of the stair shaft, an approved ladder and roof hatch openable to the exterior not less than ((~~16~~)) 11 square feet (((~~1.5~~)) 1.1 m^2) in area with a minimum dimension of 2 feet, 6 inches (((~~610~~)) 762 mm).

EXCEPTION: The hatch need not be provided on pressurized enclosures or on stairways that extend to the roof with an opening onto that roof.

Stairways exiting directly to the exterior of a building four or more stories in height shall be provided with means for emergency entry for fire department access as provided in the Seattle Fire Code, Section 10.302.

1006.13 Exterior Stairway Construction. Exterior stairways shall be constructed as specified in Sections 602.4, 603.4, 604.4, 605.4 and 606.4.

Exterior stairways shall not project into yards where openings are not permitted or protection of openings is required.

Enclosed usable space under stairs shall have the walls and soffits protected on the enclosed side as required for one–hour fire–resistive construction.

EXCEPTION: Group R, Division 3 and Group U Occupancies may use gypsum wallboard 1/2-inch (13 mm) thick.

Stairways exiting directly to the exterior of a building four or more stories in height shall be provided with means for emergency entry for fire department access as provided in Seattle Fire Code, Section 902.4.

1006.14 Stairway to Roof. In buildings four or more stories in height, other than Group R, Division 3 Occupancies, one stairway shall extend to the roof surface, unless the roof has a slope greater than 4 in 12. See Section 1006.12 for roof hatch requirements for other stairways.

1006.15 Headroom. Every stairway shall have a headroom clearance of not less than 6 feet 8 inches (2032 mm). Such clearances shall be measured vertically from a plane parallel and tangent to the stairway tread nosings to the soffit above at all points.

1006.16 Stairway Identification. Approved stairway identification signs shall be located at each floor level in all enclosed stairways in buildings four or more stories in height. The sign shall identify the stairway, indicate whether there is roof access, roof hatch or no roof access, the floor level, and the upper and lower terminus of the stairway. The sign shall be located approximately 5 feet (1524 mm) above the floor landing in a position which is readily visible when the door is in the open or closed position. Signs shall comply with requirements of U.B.C. Standard 10–2.

WSBC: Each door to a floor level also shall have a tactile sign, including raised letters and Braille, identifying the floor level and shall comply with Part IV of Chapter 11 of the Washington State Building Code.

Section 1007 — RAMPS

1007.1 General. Except for ramped aisles in assembly rooms, ramps used as exits shall conform to the provisions of this section. Ramped aisles within assembly rooms shall conform with the provisions in Section 1014. Ramps which are located within an accessible route of travel shall also comply with Chapter 11 of the Washington State Building Code.

1007.2 Width. The width of ramps shall be determined as specified in Section 1003.2, but shall not be less than 44 inches (1118 mm), except as specified herein. Ramps serving an occupant load of 49 or less shall not be less than 36 inches (914 mm) in width.

Handrails may project into the required width a distance of 3-1/2 inches (89 mm) from each side of a ramp. Other projections, such as trim and similar decorative features, may project into the required width 1-1/2 inches (38 mm) on each side.

1007.3 Slope. The slope of ramps required by Chapter 11 of the Washington State Building Code which are located within an accessible route of travel shall not be steeper than 1 unit vertical in 12 units horizontal (8.33% slope). The slope of other ramps shall not be steeper than 1 unit vertical in 8 units horizontal (12.5% slope).

1007.4 Landings. Ramps having slopes steeper than 1 unit vertical in 15 units horizontal (6.7% slope) shall have landings at the top and bottom, and at least one intermediate landing shall be provided for each 5 feet (1524 mm) of rise. Top landings and intermediate landings shall have a dimension measured in the direction of ramp run of not less than 5 feet (1524 mm). Landings at the bottom of ramps shall have a dimension in the direction of ramp run of not less than 6 feet (1829 mm).

WSBC: EXCEPTION: Ramps with slopes no steeper than 1 unit vertical in 12 units horizontal (8 % slope) may have landings at the bottom in the direction of ramp run not less than 5 feet (1524 mm) in length.

WSBC: Landings shall provide maneuvering clearances at doors as required in Chapter 11 of the Washington State Building Code.

((~~Doors in any position shall not reduce the minimum dimension of the landing to less than 42 inches (1067 mm) and shall not reduce the required width by more than 3-1/2 inches (89 mm) when fully open.~~

~~When ramp access is provided to comply with Chapter 11 and a door swings over a landing, the landing shall extend at least 24 inches (610 mm) beyond the latch edge of the door, measured parallel to the door in the closed position, and shall have a length parallel to the direction of travel through the doorway of not less than 5 feet (1524 mm).~~.))

1007.5 Handrails. Ramps having slopes steeper than 1 unit vertical in ((~~15~~)) 20 units horizontal (((~~6.7~~)) 5.0% slope) shall have handrails as required for stairways, except that intermediate handrails shall not be required. Ramped aisles need not have handrails on sides serving fixed seating.

WSBC: At least one handrail shall extend in the direction of ramp run not less than 12 inches (305 mm) horizontally beyond the top and bottom of the ramp runs.

1007.6 Construction. Ramps shall be constructed as required for stairways.

1007.7 Surface. The surface of ramps shall be roughened or shall be of slip–resistant materials.

1007.8 Guardrails. Ramps open on one or both sides shall have guardrails as required by Section 509.

1007.9 Headroom. Ramps shall have a headroom clearance of not less than 7 feet (2134 mm). Such clearances shall be measured vertically from the finished floor surface of the ramp and landings to the soffit above at all points.

Section 1008 — HORIZONTAL EXIT

1008.1 Used as a Required Exit. A horizontal exit may be considered as a required exit when conforming to the provisions of this chapter. A horizontal exit shall not serve as the only exit from a portion of a building, and when two or more exits are required, not more than one half of the total number of exits or total exit width may be horizontal exits.

1008.2 Openings. Openings in a horizontal exit shall be protected by a fire assembly having a fire–protection rating of not less than one and one–half hours.

Such fire assemblies shall be self–closing or automatic closing upon the activation of a smoke detector installed in accordance with Section 713. All hold–open devices shall be listed for the purpose and shall close or release the fire assembly to the closed position in the event of a power failure.

1008.3 Discharge Areas. A horizontal exit shall lead into a floor area having capacity for an occupant load not less than the occupant load served by such exit. The capacity shall be determined by allowing 3 square feet (0.27 m^2) of net clear floor area for each occupant to be accommodated therein, not including areas of stairs, elevators and other shafts or courts. In Group I, Division 1.1 Occupancies, the capacity shall be determined by allowing 15

square feet (1.4 m^2) of net clear floor area per ambulatory occupant and 30 square feet (2.8 m^2) per nonambulatory occupant. The area into which a horizontal exit leads shall be provided with exits adequate to meet the requirements of this chapter but need not include the added capacity imposed by persons entering it through horizontal exits.

Section 1009 — STAIRWAY, RAMP AND ESCALATOR ENCLOSURES

1009.1 General. Interior stairways, ramps or escalators shall be enclosed as specified in this section.

EXCEPTIONS: 1. In other than Groups H and I Occupancies, an enclosure need not be provided for a stairway, ramp or escalator serving only one adjacent floor. Any two such interconnected floors shall not be open to other floors. For enclosure of escalators serving Group B Occupancies, see Section 304.6.

2. Stairs in Group R, Division 3 Occupancies and stairs within individual dwelling units in Group R, Division 1 Occupancies need not be enclosed.

3. Stairs in open parking garages, as defined in Section 311.9, need not be enclosed.

4. In Group S, Division 3 garages which provide openings which comply with the standards of Section 311.9, stairways serving only the garage need not be enclosed.

1009.2 Enclosure Construction. Enclosure walls shall not be of less than two–hour fire–resistive construction in buildings more than four ((~~or more~~)) stories in height or of Types I and II fire–resistive construction and shall not be of less than one–hour fire–resistive construction elsewhere.

EXCEPTION: In sprinkler–protected parking garages restricted to the storage of private or pleasure–type motor vehicles, stairway enclosures of one- or two-hour fire-resistive construction may be enclosed with glazing meeting the requirements of Sections 713.7, 713.8 and 713.9.

1009.3 Openings into Enclosures. Openings into exit enclosures other than permitted exterior openings shall be limited to those necessary for exiting from a normally occupied space into the enclosure and exiting from the enclosure. Other penetrations ((~~into and opening through~~)) passing entirely through both protective membranes of the exit enclosure are prohibited except for ductwork and equipment necessary for independent stair pressurization, sprinkler piping, standpipes and electrical conduit serving the stairway and terminating in a listed box not exceeding 16 square inches (10 323 mm^2) in area and piping used exclusively for the drainage of rainfall runoff from roof areas provided the roof shall not be used for a helistop or heliport. Penetrations and communicating openings between adjacent exit enclosures are not permitted regardless of whether the opening is protected. Penetrations shall be protected as required by Section 709.

Interpretation I1009.3: Elevators and accessory rooms such as restrooms, storage closets and laundry rooms shall not open into an exit enclosure.

All exit doors in an exit enclosure shall be protected by a fire assembly having a fire–protection rating of not less than one hour where one–hour enclosure construction is permitted in Section 1009.2 and one and one–half hours where two–hour enclosure construction is required by Section 1009.2. Doors shall be maintained self–closing or shall be automatic closing by actuation of a smoke detector as provided for in Section 713.2. The maximum transmitted temperature end point shall not exceed 450°F. (232°C.) above ambient at the end of 30 minutes of the fire exposure specified in U.B.C. Standard 7–2. See also Section 711.2.

1009.4 Extent of Enclosure. Stairway and ramp enclosures shall include landings and parts of floors connecting stairway flights and shall also include a corridor or exit passageway on the ground floor leading from the stairway to the exterior of the building. Openings into the corridor or exit passageway shall comply with the requirements of Section 1009.3.

EXCEPTIONS: 1. Enclosed corridors or exit passageways are not required from unenclosed stairways or ramps.

2. In office buildings, a maximum of 50 percent of the exits may discharge through a street–floor lobby, provided the required exit width is free, ((~~and~~)) unobstructed and provides direct and obvious access to the exterior, and the entire street floor and any floor which is open to it are ((~~is~~)) protected with an automatic sprinkler system, and Code Alternate CA1009.1 is not used concurrently. The street floor lobby shall be limited to the following criteria:

2.1. Group B occupancies, Group M retail occupancies, and restaurants of either Group A, Division 2.1 or 3 occupancy may open into the street floor lobby. Cooking areas of restaurants requiring Type I commercial kitchen hoods as provided by Section 2003(a) of the Seattle Mechanical Code shall be separated from the lobby with construction for enclosures as specified in Section 1009.2 and Exception 4 of Section 302.4 is not used concurrently.

2.2. The street floor lobby may be open above to one adjacent floor.

2.3. The street floor lobby shall not be open to a floor below.

2.4. Atria and escalators open to more than one adjacent floor shall be separated from the street floor lobby as required by Section 1009.2.

Code Alternate CA1009.4: A maximum of 50 percent of the required exit enclosures may terminate in a parking garage level provided the following criteria are met:

1. The parking garage level contains exterior exit doors within 4 feet (1219 mm) of grade.

2. The exit pathway from the enclosures to the exterior is free, unobstructed and provides a direct and obvious access to the exterior door. The required exit width shall be maintained. The exit pathway shall be equipped with illumination as required by Section 1012.

3. The level used for an exit pathway from an exit enclosure and all levels of the parking garage open to such level are protected by an automatic sprinkler system.

1009.5 Barrier. A stairway in an exit enclosure shall not continue below the ((~~grade level~~)) exit level nearest grade unless an approved barrier is provided at the ((~~ground floor~~)) exit level to prevent persons from accidentally continuing ((~~into the basement~~)) below the exit level.

1009.6 Use of Space under Stair and Ramp. There shall be no enclosed usable space under stairways or ramps in an exit enclosure, nor shall the open space under such stairways be used for any purpose.

1009.7 Pressurized Enclosure. In a building having a floor used for human occupancy which is located more than 75 feet (22 860 mm) above the lowest level of fire department vehicle access, the entire required enclosure shall be pressurized in accordance with Section 905 of this code and this section. Pressurization shall occur automatically upon activation of an approved fire alarm system.

EXCEPTION: When the building is not equipped with a fire alarm system, pressurization shall be upon activation of a spot-type smoke detector listed for releasing service installed within 5 feet (1524 mm) of each vestibule entry.

The upper portion of such enclosures shall be provided with controlled relief vent capable of discharging a minimum of 2,500 cubic feet per minute (1180 L/s) of air at the design pressure difference.

Such enclosures shall be provided with a pressurized entrance vestibule.

1009.8 Vestibules. When required by Section 1009.7, vestibules shall meet the following requirements:

1. ((~~A level surface of not less than the area required by Section 1104.2 for two~~)) Where a wheelchair space((~~s shall be~~)) is provided, ((~~, S~~))such space shall not obstruct the required exit width and shall not interfere with access to or use of fire department hose connections and valves.

((~~2. Two-way communication for the occupants shall be provided directly to the fire-control room.~~))

((~~3~~)) 2. Emergency illumination shall be provided to maintain a minimum of 30 footcandles (323 lx) on the floor.

((~~4. An approved occupant-sensing device shall be provided. Such device shall visually indicate the presence of an occupant within the vestibule in an approved manner at the fire-control room.~~))

((~~5~~)) 3. Fire department connections and valves serving the floor shall be located within the vestibule and in such a manner as to not obstruct exiting when hose lines are connected and charged.

((~~6~~)) 4. The minimum pressure differences within the vestibule with the doors closed shall be 0.05 inch water gage (12.44 Pa) positive pressure relative to the fire floor and 0.05 inch water gage (12.44 Pa) negative relative to the exit enclosure. No pressure difference is required relative to a nonfire floor.

WSBC: For areas of refuge, see Section 1104 of the Washington State Building Code.

Section 1010 — EXIT COURTS

1010.1 General. Exit courts shall discharge into a public way or exit passageway.

1010.2 Width. Exit court minimum widths shall be determined in accordance with provisions of Section 1003 based on the occupant load and such required width shall be unobstructed to a height of 7 feet (2134 mm), except for projections permitted in corridors by Section 1005. The width of exit courts shall not be less than 44 inches

(1118 mm) except Group R, Division 3 and Group U Occupancies, where the width may be reduced to 36 inches (914 mm).

When the width is reduced from any cause, the reduction shall be effected gradually by a guardrail at least 3 feet (914 mm) in height and making an angle of not more than 30 degrees with the axis of the exit court.

1010.3 Number of Exits. Exit courts shall be provided with exits as determined by Section 1003.

1010.4 Construction and Openings. When an exit court serving a building or portion thereof having an occupant load of 10 or more is less than 10 feet (3048 mm) in width, the exit court walls shall be a minimum of one–hour fire–resistive construction for a distance of 10 feet (3048 mm) above the floor of the court, and all openings therein shall be protected by fire assemblies having a fire–protection rating of not less than three–fourths hour.

EXCEPTION: In buildings other than those which have a single means of egress under Code Alternate CA1003.1b, opening protection need not be provided where it is possible to exit in two directions from the court.

Section 1011 — EXIT PASSAGEWAYS

1011.1 Construction and Openings. The walls of exit passageways shall be without openings other than required exits from normally occupied spaces and shall have walls, floors and ceilings of the same period of fire resistance as required for the walls, floors and ceilings of the building served with a minimum of one–hour fire–resistive construction. Exit openings through the enclosing walls of exit passageways shall be protected by fire assemblies having a three–fourths–hour fire–protection rating.

1011.2 Detailed Requirements. Except for construction and opening protection as specified in Section 1011.1 above, exit passageways shall comply with the requirements for corridors as specified in Section 1005.

Section 1012 — EXIT ILLUMINATION

1012.1 General. Except within individual dwelling units, guest rooms and sleeping rooms, exits shall be illuminated at any time the building is occupied with light having intensity of not less than 1 footcandle (10.76 lx) at floor level at every point in the exit path. Exit illumination shall be installed whenever internally illuminated exit signs are required as specified in Section 1013.

((~~EXCEPTION: In auditoriums, theaters, concert or opera halls and similar assembly uses, the illumination at floor level may be reduced during performances to not less than 0.2 footcandle (2.15 lx).~~))

Code Alternate CA1012.1: Compliance with the following paragraphs will be deemed to satisfy the requirement for exit illumination with intensity of one footcandle at every point in the exit path.

1. **Location and Fixture Placement.** Exit illumination shall be located in stairways, corridors, halls, passenger elevator cars, lobbies, rooms with an occupant load of 100 or more, and other areas required to provide safe egress from the premises and immediately outside of the building exit when required by the building official. Fixtures shall be installed to not less than the following schedule:

Interior and exterior stairways and landings and outside building exit	At least one per landing
Corridors and halls and designated exit paths in parking garages	At least one for each 40 lineal feet
Lobbies, vestibules, foyers, elevator cars and other similar areas as required	At least one for each 250 square feet
Warehouses	See Item 2

These fixtures may be included in the watts per square foot calculation for exit illumination.

2. **Amount of Illumination.** Where exit illumination is required, illumination shall be provided at the rate of 0.1 watt of fluorescent illumination per square foot of area. Installations using incandescent lamps shall have a

minimum wattage of at least 3 times the fluorescent requirements. Use of other light sources shall be subject to the approval of the building official.

EXCEPTIONS: 1. In warehouses, the allowable minimum illumination may be 0.1 watt per square foot (0.03 watts for fluorescent) provided fixtures are placed either:

1.1 Where exit pathways are not designated, fixtures shall be placed to cover an area not larger than 1,600 square feet, or

1.2 Where exit pathways are designated, fixtures shall be placed at least one for every 40 lineal feet.

2. In theaters, auditoriums or other places of assembly where motion pictures or other projections are made by means of directed light, the minimum allowable illumination may be reduced to 0.05 watts per square foot of floor area (0.02 watts for fluorescent). For Group A, Division 1 and 2 Occupancies, see Section 1202.1.

3. In Groups B, F-1, M and S-1 Occupancies, when approved by the building official, the minimum allowable illumination may be reduced to 0.05 watts per square foot (0.02 watts for fluorescent) of floor area.

4. In Group B Occupancies and parking garages with walls meeting the openness requirements for Group S, Division 4 open parking garages, when approved by the building official, the illumination may be eliminated when within 50 feet of a window wall or open side and light is not totally obscured.

Exit illumination fixtures shall be spaced and designed to give adequate distribution of light for safe egress and so that the failure of any individual lighting element, such as the burning out of a light bulb, will not leave any individual space in total darkness. Illumination from battery operated fixtures shall provide the same level of illumination required for hard wired fixtures.

Fixtures required for exit illumination shall be supplied from separate sources of power where required by Section 1012.2.

1012.2 Separate Sources of Power. The power supply for exit illumination shall normally be provided by the premises' wiring system. In the event of its failure, illumination shall be automatically provided from an emergency system for Group I, Divisions 1.1 and 1.2 Occupancies and for all other occupancies where the exiting system serves an occupant load of 100 or more. The emergency system shall be as specified in the Seattle Electrical Code Section 700-12 a, b, c or f.

For high–rise buildings, see Section 403.

((~~Emergency systems shall be supplied from storage batteries or an on-site generator set and the system shall be installed in accordance with the requirements of the Electrical Code.~~))

Section 1013 — EXIT SIGNS

1013.1 Where Required. When two or more exits from a story are required by Section 1003 and where a building is designed with a single exit stairway according to Code Alternate CA1003.1b, exit signs shall be installed at stair enclosure doors, horizontal exits and other required exits from the story. When two or more exits are required from a room or area, exit signs shall be installed at the required exits from the room or area and where otherwise necessary to clearly indicate the direction of egress.

EXCEPTIONS: 1. Main exterior exit doors which obviously and clearly are identifiable as exits need not be signed when approved by the building official.

2. Group R, Division 3, and individual units of Group R, Division 1 Occupancies.

3. Exits from rooms or areas with an occupant load of less than 50 when located within a Group I, Division 1.1, 1.2 or 2 Occupancy or a Group E, Division 3 day–care occupancy.

4. Directional exit signs are not required within an individual tenant space of a Group B office building.

Interpretation I1013.1a: Exit placards may be used to identify exits in occupancies where illuminated exit signs are not required.

Interpretation I1013.1b: Exit signs shall not be required on exterior stairways serving exterior exit balconies.

Interpretation I1013.1c: Either exit signs or exit placards shall be required at any other location determined by the building official to be necessary to clearly indicate the direction of egress.

1013.2 Graphics. The color and design of lettering, arrows and other symbols on exit signs shall be in high contrast with their background. Words on ((~~the~~)) exit signs or placards shall be in green block letters 6 inches (152 mm) in height with a stroke of not less than 3/4 inch (19 mm).

EXCEPTION: Existing exit signs or placards with letters at least 5 inches (127 mm) in height may be reused.

1013.3 Illumination. ((~~Signs shall be internally or externally illuminated by two electric lamps or shall be of an approved self-luminous type. When the luminance on the face of an exit sign is from an external source, it shall~~

~~have an intensity of not less than 5.0 footcandles (53.82 lx) from either lamp. Internally illuminated signs shall provide equivalent luminance.~~))

All exit signs shall be listed. See Section 214 for a definition of "listed".

1013.4 Power Supply. ((~~Current supply to one of the lamps for exit signs shall be provided by the premises' wiring system. Power to the other lamp shall be from storage batteries or an on-site generator set and the system shall be installed in accordance with the Electrical Code. For high-rise buildings, see Section 403.~~))

Power shall be supplied as provided for exit illumination in Section 1012.

((~~**1013.5 Floor-level Exit Signs.** When exit signs are required by Section 1013.1, additional approved low-level exit signs which are internally or externally illuminated, photoluminescent or self-luminous, shall be provided in all interior exit corridors serving guest rooms of hotels in Group R, Division 1 Occupancies.~~

~~The bottom of the sign shall not be less than 6 inches (152 mm) or more than 8 inches (203 mm) above the floor level. For exit doors, the sign shall be on the door or adjacent to the door with the closest edge of the sign within 4 inches (102 mm) of the door frame.~~))

1013.6 Amusement Building Exit Marking. Approved direction exit marking and exit signs shall be provided. ((~~Approved low-level exit signs and directional marking shall be located not more than 8 inches (203 mm) above the walking surface and at the exit path.~~)) Such marking shall be activated in accordance with Section 408.5.3.

1013.7 Not-an-Exit Warnings. Non-illuminated placards reading NOT AN EXIT shall be installed at all doorways, passageways or stairways which are not exits, exit accesses or exit discharges, and which may be mistaken for an exit. A sign indicating the use of the doorway, passageway or stairway, such as TO BASEMENT, STOREROOM, LINEN CLOSET, is permitted in lieu of the NOT AN EXIT sign.

Section 1014 — AISLES

1014.1 General. Aisles leading to required exits shall be provided from all portions of buildings. Aisles located within an accessible route of travel shall also comply with Chapter 11 of the Washington State Building Code.

Interpretation I1014.1: Those portions of every building in which seats, tables, merchandise, book stacks, work benches or other equipment or similar materials are installed shall be provided with aisles leading to an exit.

1014.2 Width in Occupancies without Fixed Seats. The width of aisles in occupancies without fixed seats shall comply with this section. Aisle widths shall be provided in accordance with the following:

1. In areas serving employees only, the minimum aisle width shall be 24 inches (610 mm) but not less than the width required by the number of employees served.

2. In public areas of Groups B and M Occupancies, and in assembly occupancies without fixed seats, the minimum clear aisle width shall be 36 inches (914 mm) where tables, counters, furnishings, merchandise or other similar obstructions are placed on one side of the aisle only and 44 inches (1118 mm) when such obstructions are placed on both sides of the aisle.

1014.3 Width in Assembly ((~~Occupancies~~)) Areas with Fixed Seats. Aisles in assembly ((~~occupancies~~)) areas with fixed seats shall comply with this section. The clear width of aisles shall be based on the number of occupants within the portion of the seating areas served by the aisle.

((~~The minimum clear width of aisles and other means of egress shall be in accordance with Table 10-B or, for buildings providing smoke protected assembly seating and for which an approved life safety evaluation is conducted, in accordance with Table 10-C. For Table 10-C, the number of seats specified must be within a single assembly place, and interpolation shall be permitted between the specified values shown. For both tables, the minimum clear widths shown shall be modified in accordance with the following:~~))

The clear width of an aisle in inches shall not be less than the occupant load served by the aisle multiplied by 0.3 for aisles with slopes greater than 1 vertical to 8 horizontal and not less than 0.2 for aisles with slopes of 1 vertical to 8 horizontal or less. In addition, when the rise of steps in aisles exceeds 7 inches, the aisle clear width shall be increased by 1-1/4 inches for each 100 occupants or fraction thereof served for each 1/4 inch of riser height above 7 inches.

Exception: For buildings with smoke-protected assembly seating and for which an approved life-safety evaluation is conducted, the minimum clear width of aisles and other means of egress may be in accordance with Table 10-B. For Table 10-B, the number of seats specified must be within a single assembly place, and interpolation shall be permitted between the specified values shown. If Table 10-B is used the minimum clear widths shown shall be modified in accordance with the following:

1. If risers exceed 7 inches (178 mm) in height, multiply the stair width in the tables by factor A, where

$$A = 1 + \frac{(\text{riser height} - 7.0 \text{ in.})}{5}$$

For SI:

$$A = 1 + \frac{(\text{riser height} - 178 \text{ mm})}{127}$$

2. Stairs not having a handrail within a 30–inch (760 mm) horizontal distance shall be 25 percent wider than otherwise calculated, i.e., multiply by $B = 1.25$.

3. Ramps steeper than 1 in 10 slope where used in ascent shall have their width increased by 10 percent, i.e., multiply factor $C = 1.10$.

Where exiting is possible in two directions, the width of such aisles shall be uniform throughout their length.

When aisles converge to form a single path of exit travel, the aisle width shall not be less than the combined required width of the converging aisle.

In assembly rooms with fixed seats arranged in rows, the clear width of aisles shall not be less than set forth above or less than the following:

Forty–eight inches (1219 mm) for stairs having seating on both sides.

Thirty–six inches (914 mm) for stairs having seating on one side.

Twenty–three inches (584 mm) between a stair handrail and seating when the aisles are subdivided by the handrail.

Forty–two inches (1067 mm) for level or ramped aisles having seating on both sides.

Thirty–six inches (914 mm) for level or ramped aisles having seating on one side.

Twenty–three inches (584 mm) between a stair handrail and seating when an aisle does not serve more than five rows on one side.

1014.4 Aisle Termination. Aisles shall terminate at a cross aisle, foyer, doorway or vomitory. Aisles shall not have a dead end greater than ((~~20 feet (6096 mm)~~)) 25 feet (7620 mm) in length.

EXCEPTION: A longer dead–end aisle is permitted when seats served by the dead–end aisle are not more than 24 seats from another aisle measured along a row of seats having a minimum clear width of 12 inches (305 mm) plus 0.6 inch (15 mm) for each additional seat above seven in a row.

Each end of a cross aisle shall terminate at an aisle, foyer, doorway or vomitory.

1014.5 Ramp Slope. The slope of ramped aisles shall not be more than 1 unit vertical in 8 units horizontal (12.5% slope). Ramped aisles shall have a slip–resistant surface.

EXCEPTION: When provided with fixed seating, theaters and similar assembly rooms may have a slope not steeper than 1 vertical to 5 horizontal (20% slope).

1014.6 Aisle Steps.

1014.6.1 When prohibited. Steps shall not be used in aisles having a slope of 1 unit vertical in 8 units horizontal (12.5% slope) or less.

1014.6.2 When required. Aisles with a slope steeper than 1 unit vertical in 8 units horizontal (12.5% slope) shall consist of a series of risers and treads extending across the entire width of the aisle except as provided in Section 1014.5.

The height of risers shall not be more than 7-1/2 inches (((~~178~~)) 191 mm) or less than 4 inches (102 mm) and the tread run shall not be less than ((~~11~~)) 10 inches (((~~279~~)) 254 mm). The riser height shall be uniform within each flight and the tread run shall be uniform throughout the aisle. Variations in run or height between adjacent treads or risers shall not exceed $^{3}/_{16}$ inch (4.8 mm). A contrasting marking stripe or other approved marking shall be provided on each tread at the nosing or leading edge such that the location of each tread is readily apparent when viewed in descent. Such stripe shall be a minimum of 1 inch (25 mm) wide and a maximum of 2 inches (51 mm) wide except as provided in Section 1014.5.

EXCEPTION: When the slope of aisle steps and the adjoining seating area is the same, the riser heights may be increased to a maximum of 9 inches (229 mm) and may be nonuniform but only to the extent necessitated by changes in the slope of the adjoining seating area to maintain adequate sightlines. Variations may exceed 3/16 inch (4.8 mm) between adjacent risers provided the exact location of such variations is identified with a marking stripe on each tread at the nosing or leading edge adjacent to the nonuniform riser. The marking stripe shall be distinctively different from the contrasting marking stripe.

1014.7 Handrails. Handrails shall comply with the height, size and shape dimensions set forth in Section 1006.9 and shall have rounded terminations or bends. Ramped aisles having a slope steeper than 1 unit vertical in 15 units horizontal (6.7% slope) and aisle stairs (two or more adjacent steps) shall have handrails located either at the side or within the aisle width. Handrails may project into the required aisle width a distance of $3^{1}/_{2}$ inches (89 mm).

EXCEPTIONS: 1. Handrails may be omitted on ramped aisles having a slope not greater than 1 unit vertical in ((~~8~~)) 5 units horizontal (((~~12.5~~)) 20 % slope) and on stairways when fixed seating is on both sides of the aisle.

2. Handrails may be omitted when a guardrail is at the side of an aisle which conforms to the size and shape requirements for handrails.

Handrails located within the aisle width shall be discontinuous with gaps or breaks at intervals not to exceed five rows. These gaps or breaks shall have a clear width of not less than 22 inches (559 mm) or more than 36 inches (914 mm) measured horizontally. ((~~Such handrails shall have an additional intermediate handrail located 12 inches (305 mm) below the main handrail.~~))

Section 1015 — SEAT SPACING

When seating rows have 14 or less seats, the minimum clear width between rows shall not be less than 12 inches (305 mm) measured as the clear horizontal distance from the back of the row ahead and the nearest projection of the row behind. Where seats are automatic or self–rising, measurement may be made with the seats in the raised position. Where seats are not automatic or self–rising, the minimum clear width shall be measured with the seat in the down position.

The clear width shall be increased as follows:

1. For rows of seating served by aisles or doorways at both ends, there shall be no more than 100 seats per row and the minimum clear width of 12 inches (305 mm) between rows shall be increased by 0.3 inch (7.62 mm) for every additional seat beyond 14, but the minimum clear width need not exceed 22 inches (559 mm). If the aisles are dead ended, see Section 1014.4 for further limitations.

2. For rows of seating served by an aisle or doorway at one end only, the minimum clear width of 12 inches (305 mm) between rows shall be increased by 0.6 inch (15 mm) for every additional seat beyond seven, but the minimum clear width need not exceed 22 inches (559 mm). In addition, the distance to the point where the occupant has a choice of two directions of travel to an exit shall not exceed 30 feet (9144 mm) from the point where the occupant is seated.

Section 1016 — GROUP A OCCUPANCIES

1016.1 Main Exit. Group A, Division 1, 2 or 2.1 Occupancies shall be provided with a main exit.

The main exit shall be of sufficient width to accommodate one half of the total occupant load but shall not be less than the total required width of all aisles, exit passageways and stairways leading thereto and shall connect to a continuous and unobstructed means of egress to a public way.

1016.2 Side Exits. Auditoriums of Group A, Division 1, 2 or 2.1 Occupancies shall be provided with exits on each side. The exits on each side of the auditorium shall be of sufficient width to accommodate one third of the total occupant load served. Side exits shall open directly to a public way or into an exit court, approved stairway, exterior stairway or exit passageway leading to a public way. Side exits shall be accessible from a cross aisle.

1016.3 Balcony Exits. Balconies having an occupant load of 10 or more shall be provided with a minimum of two exits. Balcony exits shall open directly to an exterior stairway or other approved stairway or ramp. When there is more than one balcony, exits shall open into an exterior or enclosed stairway or ramp. Balcony exits shall be accessible from a cross aisle. The number and distribution of exits shall be as otherwise specified in this chapter.

1016.4 Panic Hardware. Exit doors from Group A Occupancies having an occupant load of 50 or more shall not be provided with a latch or lock unless it is panic hardware.

EXCEPTIONS: 1. In Group A, Division 3 Occupancies and in all churches, panic hardware may be omitted from the main exit when the main exit consists of a single door or pair of doors. A key–locking device may be used in place of the panic hardware, provided there is a readily visible durable sign adjacent to the doorway stating THIS DOOR MUST REMAIN UNLOCKED DURING BUSINESS HOURS. The sign shall be in letters not less than 1 inch (25 mm) high on a contrasting background. When unlocked, the single door or both leaves of a pair of doors must be free to swing without operation of any latching device. When a pair of doors is installed, one leaf shall have no locking devices whatsoever, and the second leaf shall be arranged to latch or lock into the frame and into the first leaf in such a manner that a single unlocking action will unlock both leaves simultaneously. Flush, edge or surface bolts or any other type of device that may be used to close or restrain the door other than by operation of the locking device are prohibited. The use of this exception may be revoked by the building official for due cause.

2. Panic hardware may be waived on gates surrounding stadiums when the gates are under constant immediate supervision while the public is present, and provided safe dispersal areas based on 3 square feet (0.28 m^2) per occupant are located between the stadium and the fence. Gates may be horizontal sliding or swinging and may exceed the 4–foot–width (1219 mm) limitation. The required dispersal area shall be located not less than 50 feet (15 240 mm) from the stadium.

Code Alternate CA1016.4: Doors equipped with panic hardware may be secured with a chain or padlock during the hours when the building is unoccupied by the public provided there is a readily visible durable sign adjacent to the doorway stating THIS DOOR TO REMAIN UNLOCKED DURING BUSINESS HOURS. The sign shall be in letters not less than 1 inch (25 mm) high on a contrasting background. The use of this exception may be revoked by the fire chief for due cause.

1016.5 Multitheater Complex. The main exit from the multitheater complex shall be of sufficient width to accommodate one half of the aggregate occupant load of the complex.

EXCEPTION: When approved by the building official, where the main entrance to an above-grade multitheater complex is through a lobby or foyer, there may be two separate exits from the lobby or foyer.

Corridor walls and ceilings shall be of not less than one–hour fire–resistive construction with openings protected as required in Section 1005.8.

EXCEPTION: Opening protection is not required when each motion picture auditorium has at least one half of its required exits opening directly to the exterior or into an exit passageway.

Section 1017 — GROUP E OCCUPANCIES

1017.1 Definitions. For the purpose of this section, the following definitions apply:

INTERIOR ROOM is a room whose only exit is through an adjoining or intervening room which is not an exit corridor.

ROOM is a space or area bounded by any obstructions to exit passage which at any time enclose more than 80 percent of the perimeter of the area. In computing the unobstructed perimeter, openings less than 3 feet (914 mm) in clear width and less than 6 feet 8 inches (2032 mm) high shall not be considered.

SEPARATE EXIT SYSTEM is a path of exit travel separated in such a manner from other required exits as to provide an atmospheric separation which precludes contamination of both paths by the same fire.

1017.2 Separate Exit Systems Required. Every room with an occupant load of more than 300 shall have one of its exits into a separate exit system. When three or more exits are required from a room, no more than two required exits shall enter into the same exit system.

1017.3 Travel Distance.

1017.3.1 In rooms. The distance from any point in a room shall not be more than 75 feet (22 860 mm) from an exit corridor, an enclosed stairway or the exterior of the building.

EXCEPTIONS: 1. In buildings not more than two stories in height and protected throughout with smoke detectors, the distance may be increased to 90 feet (27 432 mm).

2. In buildings protected throughout by an automatic sprinkler system, the distance may be increased to 110 feet (33 528 mm).

1017.3.2 From any location. All portions of unsprinklered buildings shall not be more than 150 feet (45 720 mm) from either an exterior exit door, a horizontal exit, an exit passageway or an enclosed stairway measured along the line of travel. In a building protected throughout with an automatic sprinkler system such distance may be increased to 225 feet (68 580 mm). In buildings not more than two stories in height protected throughout with smoke detectors, the distance may be increased to 175 feet (53 340 mm).

1017.4 Exits through Adjoining Rooms. Interior rooms may exit through adjoining or intervening rooms, provided the total travel distance through such rooms to an exit corridor does not exceed that specified in Section 1017.3.1 and is a direct, obvious and unobstructed path of travel. Such paths of exit travel shall not pass through kitchens, storerooms, restrooms, closets, laboratories using hazardous materials, industrial shops or other similar places.

Foyers and lobbies constructed as required for exit corridors shall not be construed as adjoining or intervening rooms.

When the only means of exit from a room is through an adjoining or intervening room, smoke detectors shall be installed throughout the area of the common atmosphere through which the exit must pass. The detectors shall actuate alarms audible in the interior room and shall be connected to the school fire alarm system.

EXCEPTIONS: 1. When the aggregate occupant load of the interior room or rooms is 10 or less.

2. When the enclosures forming interior rooms are less than two thirds of the floor–to–ceiling height and do not exceed 8 feet (2438 mm).

3. Rooms used exclusively for mechanical and public utility service to the buildings.

1017.5 Corridors and Exterior Exit Balconies. Corridor walls and ceilings shall be of not less than one–hour fire–resistive construction with openings protected as required in Section 1005.8.

EXCEPTIONS: 1. When each room used for instruction has at least one exit door directly to the exterior at ground level and when rooms used for assembly purposes have at least one half of the required exits directly to the exterior ground level, one–hour fire–resistive construction of corridor walls and ceilings is not required.

2. Group E, Division 3 Occupancies with an occupant load of less than 30.

Any change in elevation of less than 2 feet (610 mm) in a corridor or exterior exit balcony shall be by means of ramps.

The width of a corridor in a Group E, Division 1 Occupancy shall be the width required by Section 1003, plus 2 feet (610 mm), but not less than 6 feet (1829 mm).

EXCEPTION: When the total number of occupants served is less than 100, the corridor may be 44 inches (1118 mm) wide.

1017.6 Exit Serving Auditoriums in Group E, Division 1 Occupancy. An exit serving an auditorium and other rooms need provide only for the capacity of whichever requires the greater width if the auditorium is not to be used simultaneously with the other rooms.

1017.7 Laboratories. Occupants in laboratories having an area in excess of 200 square feet (18.6 m^2) shall have access to at least two exits from the room and all portions of the room shall be within 75 feet (22 860 mm) of an exit.

1017.8 Stairs. Each floor above or below the ground floor level shall have not less than two exit stairs and the required exit width shall be equally divided between such stairs, provided that stairs serving an occupant load of 100 or more shall be not less than 5 feet (1524 mm) in clear width.

EXCEPTION: This section does not apply to rooms used for maintenance, storage and similar purposes.

1017.9 Doors. The width of exit doors shall be sufficient to accommodate the occupant load served.

1017.10 Basement Rooms. Exit stairways from a basement or basement-like story shall open directly to the exterior of the building without entering the first floor corridor.

1017.11 Panic Hardware. Exit doors from rooms having an occupant load of 50 or more and from corridors shall not be provided with a latch or lock unless it is panic hardware.

1017.12 Fences and Gates. School grounds may be fenced and gates therein equipped with locks, provided safe dispersal areas are located not less than 50 feet (15 240 mm) from the buildings. Dispersal areas shall be sized to provide an area of not less than 3 square feet (0.28 m^2) per occupant. Gates shall not be installed across corridors

or passageways leading to such dispersal areas unless they comply with exit requirements. See Section 1021 for exits from dispersal areas.

Section 1018 — GROUP H OCCUPANCIES

Every portion of a Group H Occupancy having a floor area of 200 square feet (18.58 m^2) or more shall be served by at least two separate exits.

EXCEPTION: Group H, Division 4 Occupancies having a floor area of less than 1,000 square feet (92.9 m^2) may have one exit.

Within Group H, Divisions 1, 2 and 3 Occupancies, all portions of any room shall be within 75 feet (22 860 mm) of an exit door. Exit doors from a room classified as Group H, Divisions 1, 2 and 3 Occupancies shall not be provided with a latch or lock unless it is panic hardware.

Doors leading to a corridor of fire–resistive construction shall have a minimum three–fourths–hour fire–protection rating; shall not have more than 100 square inches (0.0645 m^2) of wired glass set in steel frames; shall be maintained self–closing or shall be automatic closing as defined in Section 713.2; and shall open in the direction of exit travel.

Within Group H, Division 7 and within fabrication areas of Group H, Division 6 Occupancies, the distance of travel to an exterior exit door, exit corridor, horizontal exit, exit passageway or an enclosed stairway shall not exceed 100 feet (30 480 mm).

Section 1019 — GROUP I OCCUPANCIES

1019.1 Exterior Doors. All required exterior exit doors shall open in the direction of exit travel.

1019.2 Minimum Size of Exits. The clear width of exits serving areas occupied or used by bed or litter patients shall be such that it will allow ready passage of such equipment, but shall not be less than 44 inches (1118 mm). Other exits shall have a clear width of not less than 32 inches (813 mm). There shall be no projections into the clear width.

1019.3 Corridors. The minimum clear width of a corridor shall be determined as specified in Section 1003.2, but shall not be less than 44 inches (1118 mm), except that corridors serving any area housing one or more nonambulatory persons shall not be less than 8 feet (2438 mm) in width.

EXCEPTION: Corridors serving surgical areas of Group I, Division 1.2 Occupancies shall not be less than six feet (1829 mm) in width until reaching an exterior door, enclosed exit stairway or horizontal exit and shall not pass through an adjoining room.

Any change in elevation of the floor in a corridor serving nonambulatory persons shall be made by means of a ramp.

Corridors shall comply with Section 1005 except that in hospitals and nursing homes classified as Group I, Division 1.1 Occupancies the following exceptions apply:

1. Nurses' stations including space for doctors' and nurses' charting and communications constructed as required for corridors need not be separated from corridors.

2. Waiting areas and similar spaces constructed as required for corridors need not be separated from corridors, provided:

2.1 Each space is located to permit direct visual supervision by the facility staff, and

2.2 The space and corridors into which the space opens are in the same smoke compartment and the space is protected by an approved electrically supervised automatic smoke–detection system.

3. Door closers need not be installed on doors to sleeping rooms.

4. Fixed fully tempered or laminated glass in wood or metal frames may be used in corridor walls, provided the glazed area does not exceed 25 percent of the area of the corridor wall of the room.

5. The total area of glass in corridor walls is not limited when the glazing is fixed 1/4–inch–thick (6.4 mm) wired glass in steel frames and the size of individual glazed panel does not exceed 1,296 square inches (0.836 m^2),

1019.4 ((~~Basement~~)) Exits from Basements and Basement-like Stories. One exit accessible to every room below grade shall lead directly to the exterior at grade level.

1019.5 Ramps. Group I, Divisions 1.1 and 1.2 Occupancies housing nonambulatory patients shall have access to a ramp leading from the first story to the exterior of the building at the ground floor level.

1019.6 Hardware. Exit doors serving an area having an occupant load of 50 or more shall not be provided with a latch or lock unless it is panic hardware. Patient room doors shall be readily openable from either side without the use of keys.

EXCEPTIONS: 1. In Group I, Division 1.1 hospitals and nursing homes, locking devices, when approved, may be installed on patient sleeping rooms, provided such devices are readily openable from the patient room side and are readily operable by the facility staff on the other side. When key locks are used on patient room doors, keys shall be located on the floor involved at a prominent location accessible to the staff.

2. In Group I, Division 3 Occupancies, approved locks or safety devices may be used where it is necessary to forcibly restrain the personal liberties of inmates or patients.

Code Alternate CA1019: Suites. 1. General. A group of rooms in a Group I, Division 1.1, Division 1.2 or Division 2 occupancy may be considered a suite when it complies with the following.

1.1. Size. Suites of rooms, other than patient sleeping rooms, shall not exceed 10,000 square feet in area. Suites of patient sleeping rooms shall not exceed 5,000 square feet in area.

1.2 Occupancy separation. Each suite shall be separated from the rest of the building by at least a one-hour fire-resistive occupancy separation.

1.3 Visual supervision. Each patient sleeping room in the suite shall be located to permit direct and constant visual supervision by the facility staff.

1.4 Other exits. The main building exiting system shall not pass through the suite.

2. Corridors. One-hour fire-resistive corridor construction is not required within a suite.

3. Exits through adjoining rooms. Rooms within suites may have exits through one adjoining room if there is not more than 100 feet (30 480 mm) of travel distance within the suite to an exit corridor, exterior exit door, horizontal exit, exit passageway or enclosed stairway. Rooms other than patient sleeping rooms may have exits through two adjoining rooms where there is not more than 50 (15 240 mm) feet of travel distance within the suite to an exit corridor, exterior exit door, horizontal exit, exit passageway or enclosed stairway.

4. Number of exits. Suites shall be provided with exits as required by Table 10-A.

Section 1020 — SPECIAL HAZARDS

1020.1 Rooms Containing Fuel–fired Equipment. Except in Group R, Division 3 Occupancies, any room containing a boiler, furnace, incinerator or other fuel–fired equipment shall be provided with two exits when both of the following conditions exist:

1. The area of the room exceeds 500 square feet (46.45 m^2), and

2. The largest piece of fuel–fired equipment exceeds 400,000 Btu per hour (117 228 W) input capacity.

If two exits are required, one may be a fixed ladder. Exits shall be separated by a horizontal distance not less than half the greatest horizontal dimension of the room. Interior openings between a Group H Occupancy and an incinerator room are prohibited.

1020.2 Refrigeration Machinery Rooms. Exits shall be of sufficient number and arrangement such that no portion of the machinery room is more than 50 feet (15 240 mm) in direction of travel from an exit. Doors shall swing in the direction of exit travel and shall be openable from the inside without the use of a key or any special knowledge or effort. Doors shall be tight fitting and self–closing. Machinery rooms containing other than Group

A1 refrigerants shall be provided with a minimum of two exits as required in Section 1020.1. See also Section 2802.

1020.3 Refrigerated Rooms or Spaces. Rooms or spaces containing a refrigerant evaporator and maintained at a temperature below 68°F. (20°C.), when having a floor area of 1,000 square feet (92.9 m^2) or more, shall be served by at least two exits. All portions of the room or space shall be within 100 feet (30 480 mm) of an exit. Exiting is allowed through adjoining refrigerated rooms or spaces.

EXCEPTION: When using Group A1 refrigerants in quantities limited to the amounts based on the volume set forth in the Mechanical Code.

1020.4 Cellulose Nitrate Film Handling. When cellulose nitrate film is handled in film laboratories, projection rooms and film processing rooms, two exits shall be provided. Doors shall be self–closing and have a fire–protection rating of not less than one hour.

Section 1021 — REVIEWING STANDS, GRANDSTANDS, BLEACHERS AND FOLDING AND TELESCOPING SEATING

1021.1 Scope. The provisions of this section apply to reviewing stands, grandstands, bleachers, and folding and telescoping seating.

1021.2 Definitions. For the purpose of this section certain terms are defined as follows:

BLEACHERS are tiered or stepped seating facilities without backrests in which an area of 3 square feet (0.28 m^2) or less is assigned per person for computing the occupant load.

DISPERSAL AREA, SAFE, is an area which will accommodate a number of persons equal to the total capacity of the stand and building which it serves such that a person within the area will not be closer than 50 feet (15 240 mm) from the stand or building. Dispersal area capacity shall be determined by allowing 3 square feet (0.28 m^2) of net clear area per person.

FOLDING AND TELESCOPING SEATING is a structure that is used for tiered seating of persons, and which overall shape and size may be reduced without being dismantled, for purposes of moving or storing.

FOOTBOARDS are that part of a raised seating facility other than an aisle or cross aisle upon which the occupant walks to reach a seat.

GRANDSTANDS are tiered or stepped seating facilities wherein an area of more than 3 square feet (0.28 m^2) is provided for each person.

OPEN–AIR GRANDSTANDS AND BLEACHERS are seating facilities which are located so that the side toward which the audience faces is unroofed and without an enclosing wall.

PERMANENT STANDS are those seating facilities which remain at a location for more than 90 days.

REVIEWING STANDS are elevated platforms accommodating not more than 50 persons. Seating facilities, if provided, are normally in the nature of loose chairs. Reviewing stands accommodating more than 50 persons shall be regulated as grandstands.

TEMPORARY SEATING FACILITIES are those which are intended for use at a location for not more than 90 days.

1021.3 Height of Reviewing Stands, Grandstands, Bleachers, and Folding and Telescoping Seating. See Section 303.2.

1021.4 Design Requirements. See Chapter 16 and Section 1806.9.

1021.5 General Requirements.

1021.5.1 Row spacing. There shall be a clear space of not less than 12 inches (305 mm) measured horizontally between the back or backrest of each seat and the front of the seat immediately behind it. The minimum spacing of rows of seats measured from back to back shall be:

1. Twenty–two inches (559 mm) for seats without backrests.

2. Thirty inches (762 mm) for seats with backrests.

3. Thirty–three inches (838 mm) for chair seating.

1021.5.2 Rise between rows. The maximum rise from one row of seats to the next shall not exceed 16 inches (406 mm) unless the seat spacing from back to back measured horizontally is 40 inches (1016 mm) or more.

EXCEPTION: When automatic– or self–rising seats are installed, the rise between rows may be increased to 24 inches (610 mm) with the horizontal spacing back to back of 33 inches (838 mm).

1021.5.3 Seating capacity determination. When bench–type seating is used, the number of seats shall be based on one person for each 18 inches (457 mm) of length of the bench.

1021.5.4 Aisles.

1021.5.4.1 Aisles required. Aisles shall be provided in all seating facilities except that aisles may be omitted when all of the following conditions exist:

1. Seats are without backrests.

2. The rise from row to row does not exceed 12 inches (305 mm) per row.

3. The number of rows does not exceed 11 in height.

4. The top seating board is not over 10 feet (3048 mm) above grade.

5. The first seating board is not more than 20 inches (508 mm) above grade.

1021.5.4.2 Obstructions. No obstruction shall be placed in the required width of any aisle or exitway.

1021.5.4.3 Width. Aisles serving seats on both sides shall have a minimum width of 42 inches (1067 mm). When serving seats on only one side, the aisle shall have a minimum width of 36 inches (914 mm). Except for temporary seating facilities, the required width for aisles shall equal the greater of the two minimum required widths determined in accordance with Section 1014.3 and this subsection.

1021.5.5 Cross aisles and vomitories. Cross aisles and vomitories shall not be less than 54 inches (1372 mm) in clear width and shall extend to an exit, enclosed stairway or exterior perimeter ramp. Except for temporary seating facilities, the required width for cross aisles shall equal the greatest of three minimum required widths determined in accordance with Section 1014 and this section.

1021.5.6 Stairways and ramps. Except as otherwise provided in this item, grandstands, bleachers, and folding and telescoping seating shall comply with other applicable sections of this chapter. Stairways and ramps shall have a maximum rise and run as provided in Section 1006.3 and Section 1007, except those within the seating facility which serve as aisles at right angles to the rows of seats where the rise shall not exceed 8 inches (203 mm). Risers may also comply with the exception to Section 1014.6. When an aisle terminates at an elevation more than 8 inches (203 mm) above grade or floor below, the aisle shall be provided with a stairway or ramp which width is not less than the width of the aisle.

Stairways and ramps shall have handrails as provided in Sections 1006 and 1007, except stairways within the seating facility which serve as aisles at right angles where handrails shall be provided at one side or along the center line. A minimum clear width of 48 inches (1219 mm) between seats shall be provided for aisle stairways having center–aisle handrails. When there is seating on both sides of the aisle, handrails shall be discontinuous with openings at intervals not exceeding five rows for access to seating. The opening shall have a clear width of at least 22 inches (559 mm) and not greater than 36 inches (914 mm) measured horizontally, and the handrail shall have rounded terminations. When handrails are provided in the middle of the aisle stairs, there shall be an additional intermediate rail located approximately 12 inches (305 mm) below the top of the handrail.

EXCEPTION: Temporary seating facility stairways within the seating area which serve as aisles at right angles need not be provided with handrails.

1021.5.7 Guardrails. Perimeter guardrails or enclosing walls or fencing shall be provided for all portions of elevated seating facilities which are more than 30 inches (762 mm) above grade or floor. Construction of guardrails shall comply with Section 509 and Table 16–B. Guardrails shall be 42 inches (1067 mm) above the rear of a seat board or 42 inches (1067 mm) above the rear of the steps in an aisle when the guardrail is parallel and adjacent to the aisle.

EXCEPTION: Guardrails at the front of the front row of seats, which are not located at the end of an aisle and where there is no cross aisle, may have a height of 26 inches (660 mm) and need not meet the 4–inch–maximum (102 mm) spacing specified in Section 509; however, a midrail shall be installed.

The open vertical space between footboards and seats shall not exceed 9 inches when footboards are more than 30 inches (762 mm) above grade.

1021.5.8 Toeboards. A 4–inch–high (102 mm) vertical barrier shall be installed along the edge of walking platforms whenever guardrails are required.

EXCEPTION: Toeboards shall not be required at the ends of footboards.

1021.5.9 Footboards. Footboards shall be provided for all rows of seats above the third row or beginning at such a point where the seat is more than 2 feet (610 mm) above the grade or floor below. When the same platform is used for both seating and footrests, footrests are not required, provided each level or platform is not less than 24 inches (610 mm) wide. When aisles are required by Section 1021.5.4, footboards not less than 18 inches (457 mm) in width shall be installed between each row of seats.

1021.6 Grandstands, Bleachers, and Folding and Telescoping Seating within Buildings. Except as otherwise provided in Section 1021.6 and 1021.7, grandstands, bleachers, and folding and telescoping seating within a building shall comply with the other applicable sections of this chapter.

EXCEPTIONS: 1. When seats are without backrests, there may be nine seats between any seat and an aisle.
2. When seats are without backrests, dead ends in vertical aisles shall not exceed a depth of 16 rows.

1021.7 Open–air Grandstands, Bleachers, and Folding and Telescoping Seating.

1021.7.1 General. Except as otherwise provided in Sections 1021.7.2 through 1021.7.10, open–air grandstands, bleachers, and folding and telescoping seating shall comply with the other applicable sections of this chapter.

1021.7.2 Number of seats between aisles. The number of seats between any seat and an aisle shall not be greater than 20 when the seats are without backrests and nine if the seats have backrests.

1021.7.3 Dead ends. Dead ends in vertical aisles shall not exceed a depth of 16 rows for permanent grandstands and 26 rows for temporary grandstands.

1021.7.4 Distance to exit. The line of travel from any seat to a safe dispersal area exit ramp, enclosed stairway or vomitory shall not be more than 200 feet (60 960 mm). When the seats have no backrests, the distance may be a direct line measurement.

1021.7.5 Safe dispersal area. Each safe dispersal area shall have a minimum of two exits. If more than 6,000 persons are to be accommodated within a dispersal area, there shall be a minimum of three exits and for more than 9,000 persons there shall be at least four exits. The aggregate clear width of exits from a safe dispersal area shall be determined on the basis of not less than one exit unit of 22 inches (559 mm) for each 500 persons to be accommodated, and no exit shall be less than 44 inches (1118 mm) in width.

1021.7.6 Two exits required. Two exits shall be provided from every facility which accommodates more than 300 persons.

1021.7.7 Three exits required. Three exits shall be required when a facility or section thereof accommodates more than 1,000 persons.

1021.7.8 Four exits required. Four exits shall be required when a facility or section thereof accommodates more than 3,000 persons.

1021.7.9 Determination of exit width. The total width of exits in feet (mm) shall not be less than the total occupant load served divided by 150 (0.492) when exiting by stairs and divided by 200 (0.656) when exiting by ramps, corridors, tunnels or vomitories.

1021.7.10 Minimum exit width. No exit shall be less than 42 inches (1067 mm) in width.

((~~Section 1022 — BUILDING SECURITY~~

~~See Appendix Chapter 10 for requirements governing building security.~~))

TABLE 10-A—MINIMUM EGRESS REQUIREMENTS[1]

USE[2]	MINIMUM OF TWO EXITS OTHER THAN ELEVATORS ARE REQUIRED WHERE NUMBER OF OCCUPANTS IS AT LEAST	OCCUPANT LOAD FACTOR[3] (square feet)
		× 0.0929 for m^2
1. Aircraft hangars (no repair)	10	500
2. Auction rooms	((~~30~~)) 50	7
3. Assembly areas, concentrated use (without fixed seats) Auditoriums Churches and chapels Dance floors Lobby accessory to assembly occupancy Lodge rooms Reviewing stands Stadiums	50	7
Waiting area	50	3
4. Assembly areas, less–concentrated use Conference rooms Dining rooms Drinking establishments Exhibit rooms Gymnasiums Lounges Stages	50	15
5. Bowling alley (assume no occupant load for bowling lanes)	50	4
((~~6. Children's homes and homes for the aged~~))	((~~6~~))	((~~80~~))
((~~7~~)) 6. Classrooms	50	((~~20~~)) 25
((~~8~~)) 7. Congregate residences Accommodating 10 or fewer persons and having an area of 3,000 square feet or less Accommodating more than 10 persons or having an area of more than 3,000 s ft	10 10	300 200
((~~9~~)) 8. Courtrooms	50	40
((~~10~~)) 9. Dormitories	10	50
((~~11~~)) 10. Dwellings	10	300
((~~12~~)) 11. Exercising rooms	50	50
((~~13~~)) 12. Garage, parking	30	200
((~~14~~)) 13. Hospitals and ((~~sanitariums~~)) psychiatric hospitals Health–care center Nursing homes Sleeping rooms Treatment rooms	 10 6 10	 80 80 80
((~~15~~)) 14 Hotels and apartments	10	200
((~~16~~)) 15 Kitchen—commercial	30	200
16 Laboratories Instructional and teaching laboratories at colleges (Group B) All other Group B labs Group E laboratories	 10 10 See Sec. 1017.7	 50 100 ---
17. Library reading room	50	50
18. Locker rooms	30	50
19. Malls (see Chapter 4)	—	—
20. Manufacturing areas	30	200
21. Mechanical equipment room (For electrical equipment areas, see also Sections 110-16 and 110-33 of the	30	300

Electrical Code)		
22. Nurseries for children (day care), day treatment centers, preschools	7	35
23. Offices Offices without sprinkler protection Offices on floors protected by an automatic sprinkler system	((~~30~~)) 50 50	100 130
24. School shops and vocational rooms	50	50
25. Skating rinks	50	50 on the skating area; 15 on the deck
26. Storage and stock rooms	30	300
27. Stores—retail sales rooms Basements and ground floor Upper floors	 50 50	 30 60
28. Swimming pools	50	50 for the pool area; 15 on the deck
29. Warehouses	30	500
30. All others	50	100

[1]Access to, and egress from, buildings for persons with disabilities shall be provided as specified in Chapter 11 of the Washington State Building Code.

[2]For additional provisions on number of exits from Groups H and I Occupancies and from rooms containing fuel-fired equipment or cellulose nitrate, see Sections 1018, 1019 and 1020, respectively.

[3]This table shall not be used to determine working space requirements per person.

[4]Occupant load based on five persons for each alley, including 15 feet (4572 mm) of runway.

((~~TABLE 10-B—CALCULATION FOR MINIMUM WIDTH IN BUILDINGS WITHOUT SMOKE-PROTECTED ASSEMBLY SEATING[4]~~

~~NUMBER OF SEATS~~	~~CLEAR WIDTH FOR STAIRS (inches)~~	~~CLEAR WIDTH PER SEAT SERVED FOR PASSAGEWAY, RAMPS AND DOORWAYS (inches) 25.4 for mm~~
~~Unlimited~~	~~0.300 AB~~	~~0.220 C~~

~~[1]See Section 1014.3 for determination of values A, B and C.~~))

TABLE 10-((C)) B—CALCULATION FOR MINIMUM WIDTH IN BUILDINGS WITH SMOKE-PROTECTED ASSEMBLY SEATING[1]

NUMBER OF SEATS	CLEAR WIDTH FOR STAIRS (inches)	CLEAR WIDTH PER SEAT SERVED FOR PASSAGEWAYS, RAMPS AND DOORWAYS (inches) 25.4 for mm
2,000	0.300 AB	0.220 C
5,000	0.200 AB	0.150 C
10,000	0.130 AB	0.100 C
15,000	0.096 AB	0.070 C
20,000	0.076 AB	0.056 C
25,000 or more	0.060 AB	0.044 C

[1]See Section 1014.3 for determination of values A, B and C.

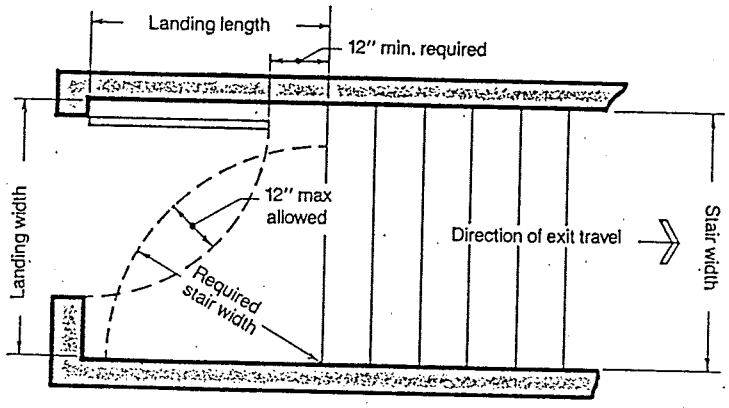

Figure 10-1

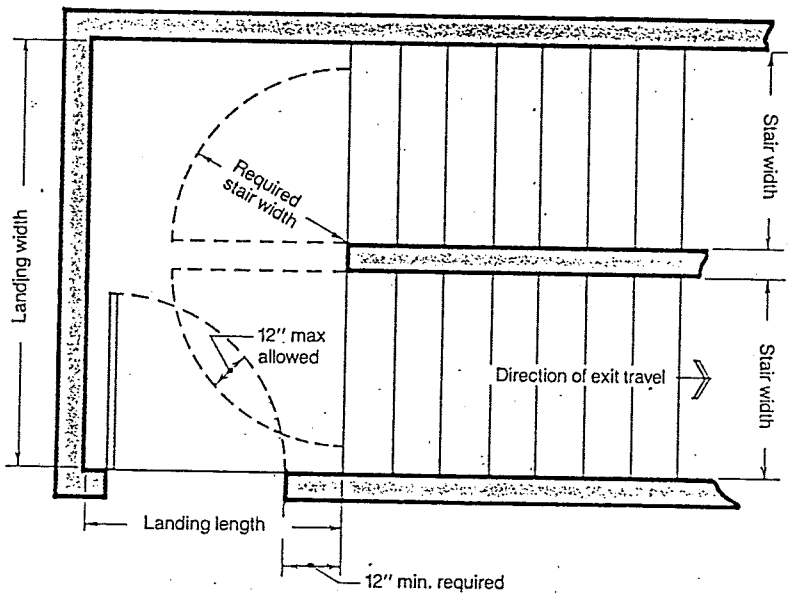

Figure 10-2

Figures 10-1 and 10-2 are Seattle amendments to the Uniform Building Code.

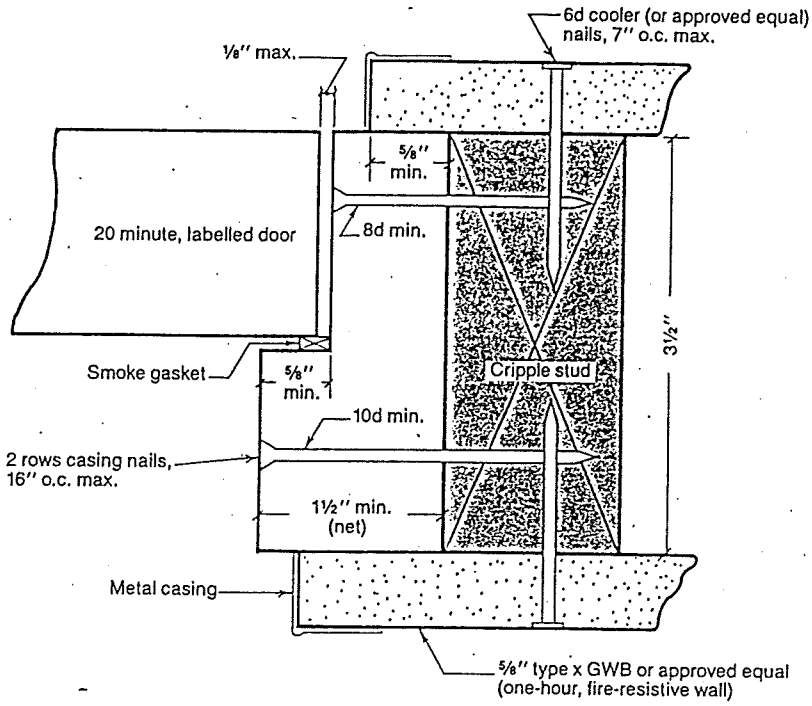

Figure 10-3

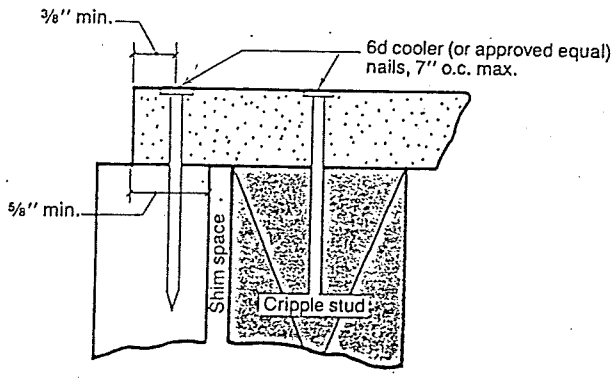

Figure 10-4

Figures 10-3 and 10-4 are Seattle amendments to the Uniform Building Code.

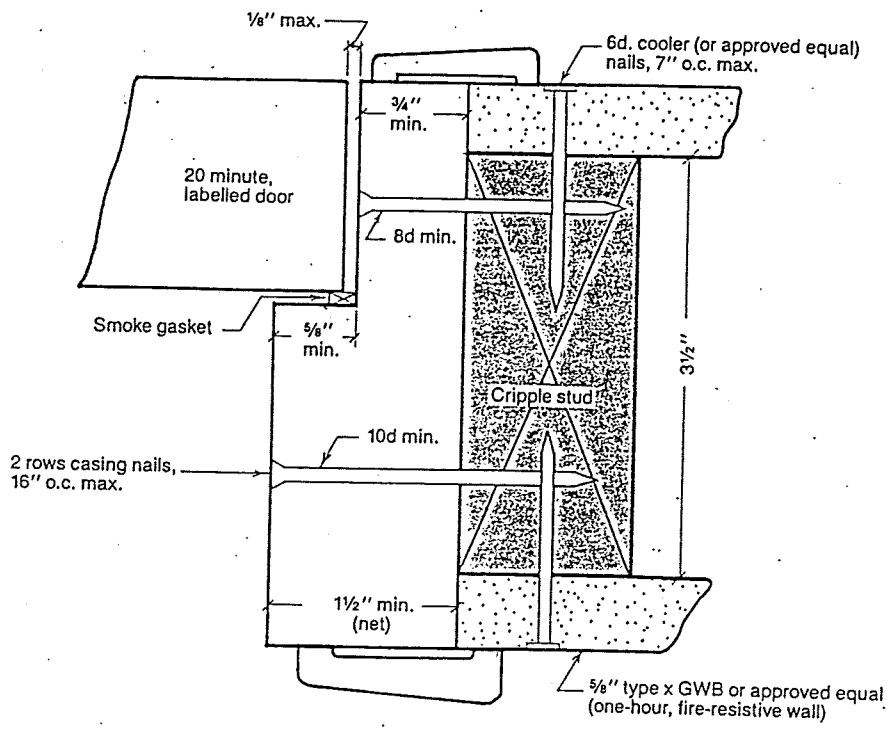

Figure 10-5

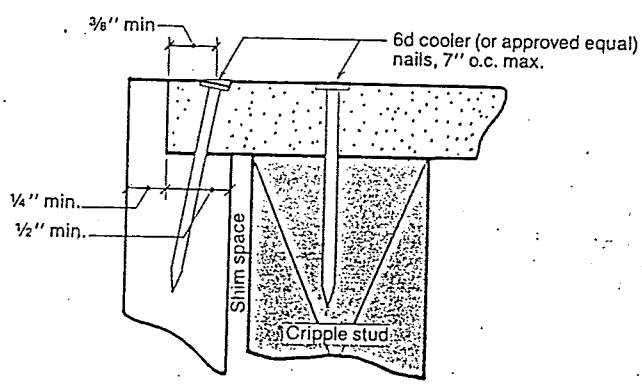

Figure 10-6

Figures 10-5 and 10-6 are Seattle amendments to the Uniform Building Code.

Section 106. Chapter 12 of the 1994 Uniform Building Code is amended as follows:

Chapter 12
INTERIOR ENVIRONMENT

Section 1201 — GENERAL

Buildings and portions thereof shall provide occupants with light and ventilation as set forth in this chapter. Accessible sanitary facilities shall also be provided as set forth in this chapter. For accessibility for persons with disabilities, see Chapter 11 of the Washington State Building Code. For ventilation of hazardous vapors or fumes, see Section 306.5 and the Mechanical Code.

Section 1202 — LIGHT AND VENTILATION IN GROUPS A, B, E, F, H, I, M AND S OCCUPANCIES

1202.1 Light. All enclosed portions of Groups A, B, E, F, H, I, M and S Occupancies customarily occupied by human beings shall be provided with natural light by means of exterior glazed openings with an area not less than one tenth of the total floor area, or shall be provided with artificial light. Such exterior openings shall open directly onto a public way or a yard or court as set forth in Section 1203.4. See Section 1012 for required exit illumination.

1202.2 Ventilation.

1202.2.1 General. All enclosed portions of Groups A, B, E, F, H, I, M and S Occupancies customarily occupied by human beings shall be provided with natural ventilation by means of openable exterior openings with an area not less than $^1/_{20}$ of the total floor area or shall be provided with a mechanically operated ventilation system which complies with Mechanical Code Chapter 3.1. Such exterior openings shall open directly onto a public way or a yard or court as set forth in Section 1203.4. ((~~Such mechanically operated ventilation system shall be capable of supplying a minimum of 15 cubic feet per minute (7 L/s) of outside air per occupant in all portions of the building during such time as the building is occupied. If the velocity of the air at a register exceeds 10 feet per second (3 m/s), the register shall be placed more than 8 feet (2438 mm) above the floor directly beneath.~~))

Toilet rooms shall be provided with a fully openable exterior window with an area not less than 3 square feet (0.279 m^2), or a vertical duct not less than 100 square inches (64 516 mm^2) in area for the first water closet plus 50 square inches (32 258 mm^2) additional of area for each additional water closet, or a mechanically operated exhaust system ((~~capable of providing a complete change of air every 15 minutes~~)) which complies with Mechanical Code Chapter 3.1. Such mechanically operated exhaust systems shall be connected directly to the outside, and the point of discharge shall be at least 3 feet (914 mm) from any opening which allows air entry into occupied portions of the building.

For ventilation of hazardous vapors or fumes in Group H Occupancies, see Sections 307.5.2 and 1202.2.3 and for Group S, Division 3 Occupancies, see Section 1202.2.7.

1202.2.2 Group B Occupancies. In all buildings classified as Group B Occupancies or portions thereof where Class I, II or III–A liquids are used, a mechanically operated exhaust ventilation shall be provided sufficient to produce six air changes per hour. Such exhaust ventilation shall be taken from a point at or near the floor level.

1202.2.3 Group H Occupancies. Rooms, areas or spaces of Group H Occupancies in which explosive, corrosive, combustible, flammable or highly toxic dusts, mists, fumes, vapors or gases are or may be emitted due to the processing, use, handling or storage of materials shall be mechanically ventilated as required by the Fire Code and the Mechanical Code.

Ducts conveying explosives or flammable vapors, fumes or dusts shall extend directly to the exterior of the building without entering other spaces. Exhaust ducts shall not extend into or through ducts and plenums.

EXCEPTION: Ducts conveying vapor or fumes having flammable constituents less than 25 percent of their lower flammability limit may pass through other spaces.

Emissions generated at work stations shall be confined to the area in which they are generated as specified in the Fire Code and the Mechanical Code.

The location of supply and exhaust openings shall be in accordance with the Mechanical Code. Exhaust air contaminated by highly toxic material shall be treated in accordance with the Fire Code.

A manual shutoff control for ventilation equipment required by this subsection shall be provided outside the room adjacent to the principal access door to the room. The switch shall be of the break–glass type and shall be labeled "Ventilation System Emergency Shutoff."

1202.2.4 Group H, Division 4 Occupancies. In all buildings classified as Group H, Division 4 Occupancies used for the repair or handling of motor vehicles operating under their own power, mechanical ventilation shall be provided capable of exhausting a minimum of 1 cubic foot per minute per square foot (5.1 L/s/m^2) of floor area. Each engine repair stall shall be equipped with an exhaust pipe extension duct, extending to the outside of the building, which, if over 10 feet (3048 mm) in length, shall mechanically exhaust 300 cubic feet per minute (141.6 L/s). Connecting offices and waiting rooms shall be supplied with conditioned air under positive pressure.

EXCEPTION: When approved, ventilating equipment may be omitted in repair garages, enclosed heliports and aircraft hangars when well–distributed unobstructed openings to the outer air of sufficient size to supply necessary ventilation are furnished.

1202.2.5 Group H, Division 6 Occupancies. In Group H, Division 6 Occupancies, mechanical ventilation, which may include recirculated air, shall be provided throughout the fabrication area at the rate of not less than 1 cubic foot per minute per square foot (0.044 L/s/m^2) of floor area. The exhaust air duct system of one fabrication area shall not connect to another duct system outside that fabrication area within the building.

Ventilation systems shall comply with the Mechanical Code except that the automatic shutoffs need not be installed on air–moving equipment. However, smoke detectors shall be installed in the circulating airstream and shall initiate a signal at the emergency control station.

Except for exhaust systems, at least one manually operated remote control switch that will shut down the fabrication area ventilation system shall be installed at an approved location outside the fabrication area.

1202.2.6 Group S repair and storage garages and aircraft hangars. In Group S, Division 3 repair garages, storage garages and in Division 5 aircraft hangars, the mechanical ventilating system required by Section 1202.2.1 may be omitted when, in the opinion of the building official, the building is supplied with unobstructed openings to the outer air which are sufficient to provide the necessary ventilation.

1202.2.7 Group S parking garages. In Group S, Division 3 parking garages, other than open parking garages, used for storing or handling automobiles operating under their own power and on loading platforms in bus terminals, ventilation shall be provided ((~~capable of exhausting a minimum of 1.5 cubic feet per minute (cfm) per square foot (0.71 L/s) of gross floor area.~~)) which complies with Mechanical Code Chapter 3.1. The building official may approve an alternate ventilation system designed to exhaust a minimum of 14,000 cfm (6608 L/s) for each operating vehicle. Such system shall be based on the anticipated instantaneous movement rate of vehicles, but not less than 2.5 percent (or one vehicle) of the garage capacity. Automatic carbon monoxide–sensing devices may be employed to modulate the ventilation system to maintain a maximum average concentration of carbon monoxide of 50 parts per million during any eight–hour period, with a maximum concentration not greater than 200 parts per million for a period not exceeding one hour. Connecting offices, waiting rooms, ticket booths and similar uses shall be supplied with conditioned air under positive pressure.

EXCEPTION: Mechanical ventilation need not be provided within a Group S, Division 3 parking garage when openings complying with Item 2 of Section 311.9.2.2 are provided.

Section 1203 — LIGHT AND VENTILATION IN GROUP R OCCUPANCIES

1203.1 General. For the purpose of determining the light or ventilation for Group R Occupancies required by this section, any room may be considered as a portion of an adjoining room when one half of the area of the common wall is open and unobstructed and provides an opening of not less than one tenth of the floor area of the interior room or 25 square feet (2.3 m^2), whichever is greater.

Exterior openings for natural light or ventilation required by this section shall open directly onto a public way or a yard or court as set forth in Section 1203.4.

EXCEPTIONS: 1. Required exterior openings may open into a roofed porch where the porch:

1.1 Abuts a public way, yard or court; and

1.2 Has a ceiling height of not less than 7 feet (2134 mm); and

1.3 Has a longer side at least 65 percent open and unobstructed.

2. Skylights.

1203.2 Light. Guest rooms and habitable rooms within a dwelling unit or congregate residence shall be provided with natural light by means of exterior glazed openings with an area not less than one tenth of the floor area of such rooms with a minimum of 10 square feet (0.93 m^2).

EXCEPTIONS: 1. Kitchens in Group R Occupancies may be provided with artificial light.

2. Artificial light may be provided in lieu of natural light in one habitable room, in addition to the kitchen, in a Group R, Division 1 dwelling unit provided:

2.1 The dwelling unit is protected by an automatic sprinkler system meeting at least the requirements of U.B.C. Standard 9-3;

2.2 The room is limited in size to ten percent of the area of the dwelling unit or 100 square feet (3048 mm), whichever is larger; and

2.3 The room is not used as a sleeping room.

1203.3 Ventilation. ((~~Guest rooms and habitable rooms within a dwelling unit or congregate residence~~)) Group R Occupancies shall be provided with ventilation systems which comply with Mechanical Code Chapter 3.1. Public corridors in Group R Occupancies shall be provided with natural ventilation by means of openable exterior openings with an area of not less than one twentieth of the floor area of such ((~~rooms~~)) corridors with a minimum of 5 square feet (0.46 m^2).

In lieu of required exterior openings for natural ventilation in public corridors, a mechanical ventilating system may be provided. Such system shall be capable of providing two air changes per hour ((~~in guest rooms, dormitories, habitable rooms and in public corridors~~)) with a minimum of 15 cubic feet per minute (7 L/s) of outside air per occupant during such time as the building is occupied.

((~~Bathrooms, water closet compartments, laundry rooms and similar rooms shall be provided with natural ventilation by means of openable exterior openings with an area not less than one twentieth of the floor area of such rooms with a minimum of 1-1/2 square feet (0.14 m^2).~~

~~In lieu of required exterior openings for natural ventilation in bathrooms containing a bathtub or shower or combination thereof, laundry rooms, and similar rooms, a mechanical ventilation system connected directly to the outside capable of providing five air changes per hour shall be provided. Such systems shall be connected directly to the outside, and t~~)) The point of discharge for mechanical ventilating systems shall be at least 3 feet (914 mm) from any opening which allows air entry into occupied portions of the building. ((~~Bathrooms which contain only a water closet or lavatory or combination thereof, and similar rooms may be ventilated with an approved mechanical recirculating fan or similar device designed to remove odors from the air.~~))

1203.4 Yards or Courts.

1203.4.1 General. This section shall apply to yards and courts adjacent to exterior openings that provide required natural light or ventilation. Such yards and courts shall be on the same property as the building.

1203.4.2 Yards. Yards shall not be less than 3 feet (914 mm) in width for one-story and two-story buildings. For buildings more than two stories in height, the minimum width of the yard shall be increased at the rate of 1 foot (305 mm) for each additional story. For buildings exceeding 14 stories in height, the required width of the yard shall be computed on the basis of 14 stories.

1203.4.3 Courts. Courts shall not be less than 3 feet (914 mm) in width. Courts having windows opening on opposite sides shall not be less than 6 feet (1829 mm) in width. Courts bounded on three or more sides by the walls of the building shall not be less than 10 feet (3048 mm) in length unless bounded on one end by a public way or yard. For buildings more than two stories in height, the court shall be increased 1 foot (305 mm) in width and 2 feet (610 mm) in length for each additional story. For buildings exceeding 14 stories in height, the required dimensions shall be computed on the basis of 14 stories.

Adequate access shall be provided to the bottom of all courts for cleaning purposes. Every court more than two stories in height shall be provided with a horizontal air intake at the bottom not less than 10 square feet (0.93 m^2)

in area and leading to the exterior of the building unless abutting a yard or public way. The construction of the air intake shall be as required for the court walls of the building, but in no case shall be less than one–hour fire resistive.

Section 1204 — EAVES

Eaves over required windows shall not be less than 30 inches (762 mm) from the side and rear property lines. See also Sections 503.2 and 705.

Section 1205 — ALTERNATE VENTILATION WHEN APPLICABLE

((~~1205.1 General. Requirements for ventilation are included in Appendix Chapter 12 of this code. When adopted (see Section 101.3) the appendix criteria shall take precedence over the ventilation requirements set forth in Sections 1202 and 1203 of this code.~~))

((~~1205.2 Standards.~~)) The standard listed below is a recognized standard and as such is not adopted as part of this code (see Sections 3502 and 3503).

ANSI/ASHRAE 62–1989 including ANSI/ASHRAE Addendum 62a–1990, Ventilation for Acceptable Indoor Air Quality

Section 1206 — SOUND TRANSMISSION CONTROL

1206.1 General. In Group R, Division 1 and Group R, Division 3, duplex Occupancies, interior wall and floor-ceiling assemblies separating dwelling units or guest rooms from each other and from public space such as interior corridors and service areas shall provide airborne sound insulation for walls, and both airborne and impact sound insulation for floor-ceiling assemblies.

The standards listed below are guideline standards and as such are not adopted as part of this code (see Sections 3502 and 3503).

1. ASTM E 90 and E 413 Laboratory Determination of Airborne Sound Transmission Class (STC)

2. ASTM E 492, Impact Sound Insulation

3. ASTM E 336, Airborne Sound Insulation Field Test

Interior wall and floor-ceiling assemblies which provide an occupancy separation between Group R, Division 1 and Group R, Division 3, duplex occupancies shall provide airborne and impact sound insulation as required for walls and floor-ceiling assemblies separating dwelling units.

Joints in the perimeter of such separating wall or floor-ceiling assemblies shall be acoustically sealed with a permanent resilient material approved for such purpose. The separating wall or floor-ceiling assembly shall extend completely to and be sealed to another separating assembly or an exterior wall, roof or floor assembly.

Conduits, ducts, pipes and vents within such wall or floor-ceiling assemblies causing vibration shall be reasonably isolated from the building construction at points of support by means of resilient sleeves, mounts or underlayments. All other openings through which such conduits, ducts, pipes or vents pass shall have the excess opening fully sealed with insulative and permanently resilient materials approved for such purpose.

Design and materials for sound transmission control shall not impair the fire-resistive integrity of separating walls or floor-ceiling assemblies required to be of fire-resistive construction.

1206.2 Airborne Sound Insulation. All such separating walls and floor-ceiling assemblies shall provide an airborne sound insulation equal to that required to meet a sound transmission class (STC) of 40 (45 if field tested).

EXCEPTION: Dwelling unit or guest room entrance doors from interior corridors and interconnecting doors between separate units shall have perimeter seals and such door assemblies shall have a sound transmission class (STC) rating of not less than 28.

Electrical outlet boxes shall not be placed back-to-back and shall be offset by not less than 12 (305 mm) inches from outlets in the opposite wall surface and back and sides of boxes shall be sealed with one-eighth-inch resilient sealant and backed by a minimum of 2-inch thick material fiber insulation or approved equivalent.

Metal ventilating and conditioned air ducts shall be lined where necessary to reduce sound transmission between dwelling units.

1206.3 Impact Sound Insulation. All separating floor-ceiling assemblies between separate units or guest rooms and all floor-ceiling assemblies which provide an occupancy separation shall provide impact sound insulation equal to that required to meet an impact insulation class (IIC) of 50. Floor covering may be included in the assembly to obtain the required ratings.

EXCEPTION: Floor assemblies in the bathrooms of Group R, Division 1 Occupancies are not required to meet the impact insulation class of 50 where structural concrete floor systems are used.

1206.4 Tested Assemblies. Field or Laboratory tested wall or floor-ceiling designs having an STC or IIC of 50 or more may be used without additional field testing when, in the opinion of the building official, the tested design has not be compromised by flanking paths. Tests may be required by the building official when evidence of compromised separations are noted. Wall or floor-ceiling designs field tested by ASTM E 336 having a minimum FSTC of FIIC rating of 45 may be used.

1206.5 Field Testing and Certification. Field testing, when permitted to determine airborne sound transmission or impact sound insulation class, shall be done in accordance with ASTM E 492 or ASTM E 336 under the supervision of a professional acoustical who shall be experienced in the field of acoustical testing and engineering and who shall forward certified test results to the building official that minimum sound insulation requirements stated above have been met.

1206.6 Mechanical Equipment Spaces. Spaces or shafts containing air conditioning, refrigeration or ventilating equipment, elevator machinery, or other mechanical equipment shall be separated both vertically and horizontally from adjoining dwelling units or guest rooms by construction designed to provide a minimum STC rating or 50.

1207 Sound Transmission Control Systems. Generic systems as listed in the Fire Resistance Design Manual, Thirteenth Edition, dated April 1992, as published by the Gypsum Association may be accepted where a laboratory test indicates that the requirements of Section 1208 are met by the system.

VIAQ: RADON RESISTIVE CONSTRUCTION STANDARDS

(a) General. The criteria of this section establish minimum radon resistive construction requirements for all Group R Occupancies.

(b) Crawl Spaces. All crawl spaces shall be ventilated as specified in Section 2516 (c).

If the ventilation openings in a crawl space are less than 1 square foot for each 300 square feet of crawlspace area, or if the crawl space vents are equipped with operable louvers, a radon vent shall be installed to originate from a point between the ground cover and soil. The radon vent shall be installed in accordance with Section 1720(d)5.

(c) Crawl Space Plenum Systems. 1. General. In crawlspace plenum systems used for providing supply air for an HVAC system, aggregate, a permanently sealed soil gas retarder membrane and a radon vent pipe shall be installed in accordance with this section. Crawlspaces shall not be used for return air plenums.

In addition, an operable radon vent fan shall be installed. The fan shall be located as specified in this section. The fan shall be capable of providing at least 100 CFM at one-inch water column static pressure. The fan shall be controlled by a readily accessible manual switch. The switch shall be labeled "RADON VENT FAN."

2. Aggregate. A layer of aggregate of 4-inch-minimum thickness shall be placed beneath the concrete slab. The aggregate shall be continuous to the extent practical. Aggregate shall:

A. Comply with ASTM Standard No. C-33 Standard Specification for Concrete Aggregate and shall be size No. 67 or larger size aggregate as listed in Table No. 2, Grading Requirements for Coarse Aggregate; or

B. Meet the 1988 Washington State Department of Transportation specification 9-03.1 (3) "Coarse Aggregate for Portland Cement Concrete", or any equivalent standards approved by the building official. Aggregate size shall be of Grade 5 or larger as listed in section 9-03.1 (3) C. "Grading"; or

C. Be screened, washed and free of deleterious substances in a manner consistent with ASTM Standard No. C-33 with 100 percent of the gravel passing a one inch sieve and less than 2 percent passing a 4-inch sieve. Sieve characteristics shall conform to those acceptable under ASTM Standard No. C-33.

EXCEPTION: Aggregate shall not be required if a substitute material or system, with sufficient load bearing characteristics, and having approved capability to provide equal or superior air flow, is installed.

3. Soil-Gas Retarder Membrane. A soil-gas retarder membrane, consisting of at least one layer of virgin polyethylene with a thickness of at least 6 mil, or equivalent flexible sheet material, shall be placed directly under the concrete slab so that the slab is in direct contact with the membrane. The flexible sheet shall extend to the foundation wall or to the outside edge of the monolithic slab. Seams shall overlap at least 12 inches.

EXCEPTION: If the membrane is not in direct contact with the bottom of the concrete slab, all overlapping seams shall be sealed with an approved tape or sealant, and the material shall be sealed to the foundation wall in a permanent manner. The membrane shall also be fitted tightly to all pipes, wire, and other penetrations of the membrane and sealed with an approved sealant or tape. All punctures or tears shall be repaired with the same or approved material and similarly lapped and sealed. In no case shall the membrane be installed below the aggregate.

4. Sealing of Penetrations and Joints. All penetrations and joints in concrete slabs or other floor systems and walls below grade shall be sealed by an approved sealant to create an air barrier to limit the movement of soil gas into the indoor air.

Sealants shall be approved by the manufacturer for the intended purpose. Sealant joints shall conform to manufacturer's specifications. There shall be no gaps or voids after the sealant has cured.

Concrete block walls connected to below grade areas shall be considered unsealed surfaces. All openings in concrete block walls that will not remain accessible upon completion of the building shall be sealed at both vertical and horizontal surfaces, in order to create a continuous air barrier to limit the transport of soil gas into the indoor air.

5. Radon Vent. One continuous sealed pipe shall run from a point within the aggregate under each concrete slab to a point outside the building. Joints and connections shall be permanently gas tight.

The continuous sealed pipe shall interface with the aggregate in the following manner, or by other approved equal method: The pipe shall be permanently connected to a "T" lie within the aggregate area. A minimum of five feet of perforated drain pipe of three inches minimum diameter shall join to and extend from the "T". The perforated pipe shall remain in the aggregate area and shall not be capped at the ends. The "T" and its perforated pipe extensions shall be located at least five feet horizontally from the exterior perimeter of the aggregate area.

The continuous sealed pipe shall terminate no less than 12 inches above the eave, and more than 10 horizontal feet from a woodstove or fireplace chimney, or operable window. The continuous sealed pipe shall be labeled "Radon Vent". The label shall be placed so as to remain visible to an occupant.

The minimum pipe diameter shall be 3 inches unless otherwise approved. Acceptable sealed plastic pipe shall be smooth walled, and may include either PVC schedule 40 or ABS schedule of equivalent wall thickness.

The entire sealed pipe system shall be sloped to drain to the sub-slab aggregate.

The sealed pipe system may pass through an unconditioned attic before exiting the building; but to the extent practicable, the sealed pipe shall be located inside the thermal envelope of the building in order to enhance passive stack venting.

EXCEPTION: A radon vent shall not be required if a fan-forced sub-slab depressurization system is installed. A fan-forced sub-slab depressurization system includes:

1. Soil-gas retarder membrane as specified in Section (c)3;

2. Sealing of penetrations and joints as specified in Section (c) 4;

3. A 3 inch continuous sealed radon pipe which shall run from a point within the aggregate under each concrete slab to a point outside the building;

4. Joints and connections may be gas tight, and may be of either PVC schedule 40 or ABS schedule of equivalent wall thickness;

5. A label of "Radon Vent" shall be placed on the pipe so as to remain visible to the occupant; and

6. Fan circuit and wiring as specified in Section (c) 6 and a fan.

If the sub-slab depressurization system is exhausted through the concrete foundation wall or rim joist, the exhaust terminus shall be a minimum of six feet from operable widows and outdoor air intake vents and shall be directed away from operable windows and outdoor air intake vents to prevent radon re-entrainment.

6. Fan Circuit and Wiring and Location. An area for location of an in-line fan shall be provided. The location shall be as close as practicable to the radon vent pipe's point of exit from the building, or shall be outside the building shell. It shall be located so that the fan and all downstream piping is isolated from the indoor air.

Provisions shall be made to allow future activation of an in-line fan on the radon vent pipe without the need to place new wiring. A 110 volt power supply shall be provided at a junction box near the fan location.

7. Separate Aggregate Areas. If the 4 inch aggregate area underneath the concrete slab is not continuous, but is separated into distinct isolated aggregate areas by a footing or other barrier, a minimum of one radon vent pipe shall be installed into each separate aggregate area.

EXCEPTION: Separate aggregate areas may be considered a single area if a minimum 3 inch diameter connection joining the separate areas is provided for every 30 feet of barrier separating those areas.

VIAQ: FORMALDEHYDE REDUCTION MEASURES In all Group R Occupancies all structural panel components within the conditioned space such as plywood, particle board, wafer board, and oriented strand board shall be identified as "EXPOSURE 1", "EXTERIOR" or "HUD APPROVED".

Section 107. Chapter 13 of the 1994 Uniform Building Code is amended as follows:

Chapter 13
ENERGY CONSERVATION

Section 1301 — SOLAR ENERGY COLLECTORS

Collectors which function as building components shall comply with the applicable provisions of the code.

Collectors located above or upon a roof and not functioning as building components shall not reduce the required fire–resistance or fire–retardancy classification of the roof–covering materials.

EXCEPTIONS: 1. Collectors installed on one– and two–family dwellings.

2. Noncombustible collectors located on buildings not over three stories in height or 9,000 square feet (836 m^2) in total floor area.

3. Collectors that comply with the provisions of Section 2603.14.

((~~A complete code for energy conservation in new buildings is contained in Appendix Chapter 13. When adopted, as set forth in Section 101.3, Appendix Chapter 13 applies.~~))

Section 1302 -- ENERGY CONSERVATION

Energy conservation is regulated according to the Seattle Energy Code.

RCW 70.94.455: No new or substantially remodeled building shall be dependent upon a woodstove for its primary source of heat.

RCW 70.94.455: No used solid fuel burning device shall be installed in a new or existing building unless the device is certified by Oregon Department of Environmental Quality Phase II or the United States Environmental Protection Agency. Pellet stoves may be installed if they either carry such certification or have been exempted from certification by the United States Environmental Protection Agency.

Section 108. Section 1401.1 of the 1994 Uniform Building Code is amended as follows:

1401.1 Applicability. Exterior wall coverings for the building shall provide weather protection for the building at its exterior boundaries.

Exterior wall covering shall be in accordance with this chapter and as specified by the applicable provisions elsewhere in this code. For additional provisions see Chapter 19 for concrete, Chapter 20 for lightweight metals, Chapter 21 for masonry, Chapter 22 for steel, Chapter 23 for wood, Chapter 25 for gypsum wallboard and plaster and Chapter 26 for plastics. Also, see the following:

SECTION	SUBJECT
601.5.4	Walls fronting on streets
602.1	Materials in Type I construction
603.1	Materials in Type II construction
604.3.1	Exterior walls in Type III construction
605.3.1	Exterior walls in Type IV construction
606.1	Materials in Type V construction
709.1	Vinyl and aluminum siding on Type V-One hour construction

Section 109. Section 1402 of the 1994 Uniform Building Code is amended as follows:

Section **1402 — WEATHER PROTECTION**

1402.1 Weather–resistive Barriers. All weather–exposed surfaces shall have a weather–resistive barrier to protect the ((~~interior~~)) insulation, internal wall structural members and wall covering. Such barrier shall be equal to that provided for in U.B.C. Standard 14–1 for kraft waterproof building paper or asphalt–saturated rag felt. This standard is listed in Chapter 35, Part II, and is a part of this code. Building paper and felt shall be free from holes and breaks other than those created by fasteners and construction system due to attaching of the building paper, and shall be applied over studs or sheathing of all exterior walls. Such felt or paper shall be applied horizontally, with the upper layer lapped over the lower layer not less than 2 inches (51 mm) . Where vertical joints occur, felt or paper shall be lapped not less than 6 inches (152 mm).

Weather–protected barrier may be omitted in the following cases:

1. When exterior covering is of approved weatherproof panels.

2. In back–plastered construction.

3. When there is no human occupancy.

4. Over water–repellent panel sheathing.

5. Under approved paperbacked metal or wire fabric lath.

6. Behind lath and portland cement plaster applied to the underside of roof and eave projections.

1402.2 Flashing and Counterflashing. Exterior openings exposed to the weather shall be flashed in such a manner as to make them weatherproof.

All parapets shall be provided with coping of approved materials. All flashing, counterflashing and coping, when of metal, shall have a minimum thickness of 0.019 inches (0.48 mm) (No. 26 galvanized sheet metal gage) corrosion–resistant metal.

1402.3 Waterproofing Weather–exposed Areas. Balconies, landings, exterior stairways, occupied roofs and similar surfaces exposed to the weather and sealed underneath shall be waterproofed and sloped ((~~a minimum of 1/4 unit vertical in 12 units horizontal (2% slope)~~)) for drainage.

1402.4 Dampproofing Foundation Walls. Unless otherwise approved by the building official, foundation walls enclosing a basement below finished grade shall be dampproofed outside by approved methods and materials.

Section 110. Section 1404 of the 1994 Uniform Building Code is amended as follows:

Section **1404 — VINYL SIDING**

1404.1 Vinyl siding conforming to the requirements of this section and complying with U.B.C. Standard 14–2 may be installed on exterior walls of buildings of Type V construction located in areas where the wind speed specified in Figure 16–1 does not exceed 80 miles per hour (129 km/h) and the building height is less than 40 feet (12 192 mm) in Exposure C. If construction is located in areas where wind speed exceeds 80 miles per hour (129 km/h), or building heights are in excess of 40 feet (12 192 mm), data indicating compliance with Chapter 16 must be submitted. Vinyl siding shall be secured to the building so as to provide weather protection for the exterior walls of the building.

For the use of vinyl siding on rated exterior walls, see Section 709.1.

1404.2 Application. The siding shall be applied over sheathing or materials listed in Section 2320. Siding shall be applied to conform with the weather–resistive barrier requirements in Section 1402.1. Siding and accessories shall be installed in accordance with approved manufacturer's instructions.

Nails used to fasten the siding and accessories shall have a minimum 3/8–inch (9.5 mm) head diameter and 0.120–inch (3.05 mm) shank diameter. The nails shall be corrosion resistant and shall be long enough to penetrate the studs or nailing strip at least 3/4 inch (19 mm). Where the siding is installed horizontally, the fastener spacing shall not exceed 16 inches (406 mm) horizontally and 12 inches (305 mm) vertically. Where the siding is installed vertically, the fastener spacing shall not exceed 12 inches (305 mm) horizontally and 12 inches (305 mm) vertically.

Section 111. Section 1505.3 of the 1994 Uniform Building Code is amended as follows:

1505.3 Ventilation. ((~~Where determined necessary by the building official due to atmospheric or climatic conditions, e~~)) Enclosed attics and enclosed rafter spaces formed where ceilings are applied directly to the underside of roof rafters shall have cross ventilation for each separate space by ventilating openings protected against the entrance of rain and snow. The net free ventilating area shall not be less than 1/150 of the area of the space ventilated.

EXCEPTIONS: 1. The area may be 1/300 of the area of the space ventilated provided 50 percent of the required ventilating area is provided by ventilators located in the upper portion of the space to be ventilated at least 3 feet (914 mm) above eave or cornice vents with the balance of the required ventilation provided by eave or cornice vents.

2. The area may be 1/300 of the area of the space ventilated provided a vapor retarder having a transmission rate not exceeding 1 perm [5.7×10^{-11} kg/(Pa·s·m^2)] is installed on the warm side of the attic insulation.

The openings shall be covered with corrosion–resistant metal mesh with mesh openings of 1/4 inch (6.4 mm) in dimension. See also Section 710.2.

Smoke and heat venting shall be in accordance with Section 906.

Section 112. Section 1506.3 of the 1994 Uniform Building Code is amended as follows:

1506.3 Overflow Drains and Scuppers. Where roof drains are required, overflow drains having the same size as the roof drains shall be installed with the inlet flow line located 2 inches (51 mm) above the low point of the roof, or overflow scuppers having three times the size of the roof drains may be installed in adjacent parapet walls with the inlet flow line located 2 inches (51 mm) above the low point of the adjacent roof and having a minimum opening height of 4 inches (102 mm).

All roof drains and overflow drains shall be provided with strainers.

Overflow drains shall be connected to drain lines independent from the roof drain lines.

Interpretation I1506: Overflow leaders may connect to storm drain risers when the storm drain riser is sized in accordance with either Table No. 4-4 or Appendix D (2-inch (51 mm) rainfall column) of the Seattle Plumbing Code.

Section 113. Section 1506.5 of the 1994 Uniform Building Code is amended as follows:

1506.5 Over Public Property. Roof drainage water from a building shall not be permitted to flow over public property.

((~~EXCEPTION: Group R, Division 3 and Group U Occupancies.~~))

Section 114. Section 1511.4 of the 1994 Uniform Building Code is amended as follows:

1511.4 Construction. Roof structures shall be constructed with walls, floors and roof as required for the main portion of the building.

EXCEPTIONS: 1. On Types I and II–F.R. buildings, the exterior walls and roofs of penthouses which are 5 feet (1524 mm) or more from an adjacent property line may be of one–hour fire–resistive noncombustible construction.

2. On Types III and IV buildings, walls not less than 5 feet (1524 mm) from an adjacent property line may be of one–hour fire–resistive noncombustible construction.

3. Enclosures housing only mechanical equipment and located at least ((~~20 feet (6096 mm)~~)) 16 feet (4877 mm) from adjacent property lines may be of unprotected noncombustible construction.

4. On one–story buildings, unroofed mechanical equipment screens, fences or similar enclosures may be of combustible construction when located at least ((~~20 feet (6096 mm)~~)) 16 feet (4877 mm) from adjacent property lines and when not exceeding 4 feet (1219 mm) in height above the roof surface.

The restrictions of this section shall not prohibit the placing of wood flagpoles or similar structures on the roof of any building.

Section 115. Section 1602 of the 1994 Uniform Building Code is amended as follows:

Section **1602 — DEFINITIONS**

The following definitions give the meaning of certain terms used in this chapter:

DEAD LOAD is the vertical load due to the weight of all permanent structural and nonstructural components of a building, such as walls, floors, roofs and fixed service equipment.

LATERAL EARTH PRESSURE is the lateral pressure the retained earth exerts against foundation walls, basement walls, retaining walls and other earth retention structures.

LIVE LOAD is the load superimposed by the use and occupancy of the building not including the wind load, earthquake load, lateral earth pressure, or dead load. See Section 1604.5 for posting of live loads.

LOAD DURATION is the period of continuous application of a given load, or the aggregate of periods of intermittent application of the same load.

Section 116. Section 1604.5 of the 1994 Uniform Building Code is amended as follows:

1604.5 Live Loads Posted. ((~~The live loads for which e~~))Each floor or part thereof of a commercial or industrial building ((~~is or has been designed~~)) with a design live load of more than 125 psf, and for warehouse and storage areas for any established live load, shall have such designed live loads conspicuously posted by the owner in that part of each story in which they apply, using durable metal signs, and it shall be unlawful to remove or deface such notices. The occupant of the building shall be responsible for keeping the actual load below the allowable limits.

Section 117. Section 1605 of the 1994 Uniform Building Code is amended as follows:

Section **1605 — ROOF DESIGN**

1605.1 General. Roofs shall sustain, within the stress limitations of this code, all dead loads plus a minimum 25 pounds per square foot snow load. ((~~unit live loads as set forth in Table 16-C.~~)) The ((~~live~~)) snow loads shall be assumed to act vertically upon the area projected upon a horizontal plane. For greenhouses and lathhouses, see Section 1605.5.

1605.2 Distribution of Loads. Where uniform roof loads are involved in the design of structural members arranged so as to create continuity, consideration may be limited to full dead loads on all spans in combination with full live loads on adjacent spans and on alternate spans.

EXCEPTION: Alternate span loading need not be considered where the uniform roof live load is 20 pounds per square foot (0.96 kN/m^2) or more or the provisions of Section 1605.4 are met.

For those conditions where light-gage metal preformed structural sheets serve as the support and finish of roofs, roof structural members arranged so as to create continuity shall be considered adequate if designed for full dead loads on all spans in combination with the most critical one of the following superimposed loads:

1. Snow load in accordance with Section 1605.4.

((~~2. The uniform live load set forth in Table 16-C on all spans.~~

~~3~~)) 2. A concentrated gravity load of 2,000 pounds (8.9 kN) placed on any span supporting a tributary area greater than 200 square feet (18.58 m^2) so as to create maximum stress in the member whenever this loading creates greater stresses than those caused by the uniform live load. The concentrated load shall be placed on the member over a length of $2^1/_2$ feet (762 mm) along the span. The 2,000-pound (8.9 kN) load need not be applied to more than one span simultaneously.

((4)) 3. Water accumulation as prescribed in Section 1605.6.

1605.3 Unbalanced Loading. Unbalanced loads shall be used where such loading will result in larger members or connections. Trusses and arches shall be designed to resist the stresses caused by unit ((~~live~~)) snow loads on one half of the span in combination with wind loads as specified in Section 1603.6 if such loading results in reverse stresses, or stresses greater in any portion than the stresses produced by the required unit ((~~live~~)) snow load upon the entire span. ((~~For roofs whose structures are composed of a stressed shell, framed or solid, wherein stresses caused by any point loading are distributed throughout the area of the shell, the requirements for unbalanced unit live load design may be reduced 50 percent.~~))

The following additional load combinations shall be considered:

1. One half of the snow load on one half of the span shall be substituted for snow/2 in Combination No. 3.

2. One half of the snow load on one half of the span plus full snow load on the other half shall be substituted for snow in Combination No. 4.

1605.4 Snow Loads. Snow loads full or unbalanced shall be considered ((~~in place of loads set forth in Table 16-C,~~)) where such loading will result in larger members or connections.

Potential unbalanced accumulation of snow at valleys, parapets, roof structures and offsets in roofs of uneven configuration shall be considered. ((~~Where snow loads occur, the snow loads shall be determined by the building official.~~))

Snow loads in excess of 20 pounds per square foot (0.96 kN/m^2) may be reduced for each degree of pitch over 20 degrees by R_s as determined by the following formula:

$$R_s = \frac{S}{40} - \frac{1}{2} \qquad (5\text{–}1)$$

For SI:

$$R_s = \frac{S}{40} - 0.024$$

WHERE:

R_s = snow load reduction in pounds per square foot (kN/m^2) per degree of pitch over 20 degrees.

S = total snow load in pounds per square foot (kN/m^2).

Code Alternate CA1605.4: The engineer may consider drifting and sliding snow loading using the ground snow load per the latest Structural Engineers Association of Washington "Snow Load Recommendations for Washington". However, the results shall be no less than the minimum requirement calculated according to Section 1605.4.

For alternate design procedure see Appendix Chapter 16, Division I.

1605.5 Special Roof Loadings. Roofs to be used for special purposes shall be designed for appropriate loads as approved by the building official.

Greenhouse roof bars, purlins and rafters shall be designed to carry a 100–pound–minimum (444.8 N) concentrated load in addition to the ((~~live~~)) snow load.

Interpretation I1605.5: Greenhouses and lathhouses not used as a place of human habitation may be designed for a 10 pound per square foot snow load.

1605.6 Water Accumulation. All roofs shall be designed with sufficient slope or camber to assure adequate drainage after the long–time deflection from dead load or shall be designed to support maximum loads, including possible ponding of water from any source, including snow, due to deflection. See Section 1608 for deflection criteria.

Section 118. The 1994 Uniform Building Code is amended by deleting Section 1607.

Section 119. Section 1616 of the 1994 Uniform Building Code is amended as follows:

SECTION 1616 — BASIC WIND SPEED

The minimum basic wind speed at any site shall ((~~not be less than that shown in Figure 16-1. For those areas designated in Figure 16-1 as special wind regions and other areas where local records or terrain indicate higher 50-year (mean recurrence interval) fastest-mile wind speeds, these higher values shall be the minimum basic wind speeds~~)) be 80 miles per hour.

Section 120. Section 1617 of the 1994 Uniform Building Code is amended as follows:

SECTION 1617 — EXPOSURE

An exposure shall be assigned at each site for which a building or structure is to be designed.

Interpretation I1617: An exposure B may be assigned to any site within the City regardless of individual site characteristics.

Section 121. Section 1627.1 of the 1994 Uniform Building Code is amended as follows:

1627.1.1 **Basis for Design.** The procedures and limitations for the design of structures shall be determined considering zoning, site characteristics, occupancy, configuration, structural system and height in accordance with this section. The minimum design seismic forces shall be those determined in accordance with the static lateral force procedure of Section 1628 except as modified by Section 1629.5.3. One- and two-family dwellings in Seismic Zone 1 need not conform to the provisions of this section.

1627.1.2 **Predesign Conference.** At least 60 days prior to application, the applicant shall arrange a predesign conference with the structural engineer of record and the building official to review the proposed building structural system when it is undefined as described in Section 1627.6 or when an alternate procedure is used as allowed in Section 1627.10. It is the purpose of the meeting to obtain conceptual approval from the building official of the proposed structural system and to allow for design based upon the latest state of the art.

The building official may require sufficient documentation, based upon appropriate analyses, that the proposal meets the intent of nationally recognized good practices. The building permit shall not be issued until the building official has approved, in writing, the earthquake design concept for the building. The documentation of the predesign meeting shall be reflected on the plans for the building and become a permanent part of the Department of Construction and Land Use records.

Section 122. The 1994 Uniform Building Code is amended by deleting Section 1633.

Section 123. Table 16-A of the 1994 Uniform Building Code is amended as follows:

TABLE 16–A—UNIFORM AND CONCENTRATED LOADS

USE OR OCCUPANCY		UNIFORM LOAD[1] (pounds per square foot)	CONCEN-TRATED LOAD (pounds)
Category	Description	× 0.0479 for kN/m^2	× 0.004 48 for kN
1. Access floor systems	Office use	50	2,000[2]
	Computer use	100	2,000[2]
2. Armories		150	0
3. Assembly areas[3] and auditoriums and balconies therewith	Fixed seating areas	50	0
	Movable seating and other areas	100	0
	Stage areas and enclosed platforms	125	0
4. ((~~Cornices and~~)) marquees[10]		60[4]	0
5. Exit facilities[5]		100	0[6]
6. Garages[11]	General storage and/or repair	100	—[7]
	Private or pleasure–type motor vehicle storage	50	—[7]
7. Hospitals	Wards and rooms	40	1,000[2]
8. Libraries	Reading rooms	60	1,000[2]
	Stack rooms	125	1,500[2]
9. Manufacturing	Light	75	2,000[2]
	Heavy	125	3,000[2]
10. Offices		50	2,000[2]
11. Printing plants	Press rooms	150	2,500[2]
	Composing and linotype rooms	100	2,000[2]
12. Residential[8]	Basic floor area	40	0[6]
	((~~Exterior balconies~~))	((~~60~~[4]))	((~~0~~))
	((~~Decks~~))	((~~40~~[4]))	((~~0~~))
13. Restrooms[9]			
14. Reviewing stands, grandstands, bleachers, and folding and telescoping seating		100	0
15. ((~~Roof~~)) decks	Same as area served or for the type of occupancy accommodated		
15.1. Private decks accessory to a dwelling unit.		40[4]	
15.2 Common use decks generally not accessible to the public.		60[4]	
15.3 All other decks.		100[4]	
16. Schools	Classrooms	40	1,000[2]
17. Sidewalks and driveways	Public access	250	—[7]
18. Storage	Light	125	
	Heavy	250	
19. Stores	Retail	75	2,000[2]
	Wholesale	100	3,000[2]
20. Pedestrian bridges and walkways		100	

[1]See Section 1606 for live load reductions.

[2]See Section 1604.3, first paragraph, for area of load application.

[3]Assembly areas include such occupancies as dance halls, drill rooms, gymnasiums, playgrounds, plazas, terraces and similar occupancies which are generally accessible to the public.

[4]When snow loads occur that are in excess of the design conditions, the structure shall be designed to support the loads due to the increased loads caused by drift buildup or a greater snow design as determined by the building official. See Section 1605.4. For special–purpose roofs, see Section 1605.5.

[5]Exit facilities shall include such uses as corridors serving an occupant load of 10 or more persons, exterior exit balconies, stairways, fire escapes and similar uses.

[6]Individual stair treads shall be designed to support a 300–pound (1.33 kN) concentrated load placed in a position which would cause maximum stress. Stair stringers may be designed for the uniform load set forth in the table.

[7]See Section 1604.3, second paragraph, for concentrated loads. See Table 16–B for vehicle barriers.

[8]Residential occupancies include private dwellings, apartments, congregate residences and hotel and lodging house guest rooms.

[9]Restroom loads shall not be less than the load for the occupancy with which they are associated, but need not exceed 50 pounds per square foot (2.4 kN/m^2).

[10]This loading condition need only be considered for marquees that are less than 10 feet above the ground at all points, more than 10 feet below an adjacent roof, or are located less than 10 feet from operable openings above or adjacent to the level of the marquee and which have a slope of less than 30 degrees from horizontal on their upper surface.

[11]See Section 311.2.3.5 for vehicle barriers.

Section 124. Table 16-B of the 1994 Uniform Building Code is amended as follows:

TABLE 16–B—SPECIAL LOADS[1]

USE		VERTICAL LOAD	LATERAL LOAD
Category	Description	(pounds per square foot unless otherwise noted)	
		× 0.0479 for kN/m^2	
1. Construction, public access at site (live load)	((~~Walkway, see Section 3303.6~~)) See Seattle Municipal Code Title 15, Street and Sidewalk Use Code.	((~~150~~))	
	((~~Canopy, see Section 3303.7~~))	((~~150~~))	
2. Grandstands, reviewing stands, bleachers, and folding and telescoping seating (live load)	Seats and footboards	120[2]	See Footnote 3
3. Stage accessories (live load)	Catwalks	40	
	Followspot, projection and control rooms	50	
4. Ceiling framing (live load)	Over stages	20	
	All uses except over stages	10[4]	
5. Partitions and interior walls, see Sec. 1609 (live load)			5
6. Elevators and dumbwaiters (dead and live loads)		2 × total loads[5]	
7. Mechanical and electrical equipment (dead load)		Total loads	
8. Cranes (dead and live loads)	Total load including impact increase	1.25 × total load[6]	0.10 × total load[7]
9. Balcony railings and guardrails	Exit facilities serving an occupant load greater than 50		50[8]
	Other ((~~than exit facilities~~))		20[8]
	Components		25[9]
10. Vehicle barriers	See Section 311.2.3.5		6,000[10]
11. Handrails		See Footnote 11	See Footnote 11
12. Storage racks	Over 8 feet (2438 mm) high	Total loads[12]	See Table 16–O
13. Fire sprinkler structural support		250 pounds (1112 N) plus weight of water–filled pipe[13]	See Table 16–O
14. Explosion exposure	Hazardous occupancies, see Section 307.10		

[1]The tabulated loads are minimum loads. Where other vertical loads required by this code or required by the design would cause greater stresses, they shall be used.

[2]Pounds per lineal foot (× 14.6 for N/m).

[3]Lateral sway bracing loads of 24 pounds per foot (350 N/m) parallel and 10 pounds per foot (145.9 N/m) perpendicular to seat and footboards.

[4]Does not apply to ceilings which have sufficient total access from below, such that access is not required within the space above the ceiling. Does not apply to ceilings if the attic areas above the ceiling are not provided with access. This live load need not be considered as acting simultaneously with other live loads imposed upon the ceiling framing or its supporting structure.

[5]((~~Where Appendix~~)) See Chapter 30 ((~~has been adopted, see reference standard cited therein~~)) for additional design requirements.

[6]The impact factors included are for cranes with steel wheels riding on steel rails. They may be modified if substantiating technical data acceptable to the building official is submitted. Live loads on crane support girders and their connections shall be taken as the maximum crane wheel loads. For pendant–operated traveling crane support girders and their connections, the impact factors shall be 1.10.

[7]This applies in the direction parallel to the runway rails (longitudinal). The factor for forces perpendicular to the rail is 0.20 × the transverse traveling loads (trolley, cab, hooks and lifted loads). Forces shall be applied at top of rail and may be distributed among rails of multiple rail cranes and shall be distributed with due regard for lateral stiffness of the structures supporting these rails.

[8]A load per lineal foot (× 14.6 for N/m) to be applied horizontally at right angles to the top rail.

[9]Intermediate rails, panel fillers and their connections shall be capable of withstanding a load of 25 pounds per square foot (1.2 kN/m^2) applied horizontally at right angles over the entire tributary area, including openings and spaces between rails. Reactions due to this loading need not be combined with those of Footnote 8.

[10]A horizontal load applied at right angles to the vehicle barrier at a height of 18 inches (457 mm) above the parking surface. The force may be distributed over a 1–foot–square (304.8–milimeter–square) area.

[11]The mounting of handrails shall be such that the completed handrail and supporting structure are capable of withstanding a load of at least 200 pounds (890 kN) applied in any direction at any point on the rail. These loads shall not be assumed to act cumulatively with Item 9.

[12]Vertical members of storage racks shall be protected from impact forces of operating equipment, or racks shall be designed so that failure of one vertical member will not cause collapse of more than the bay or bays directly supported by that member.

[13]The 250–pound (1.11 kN) load is to be applied to any single fire sprinkler support point but not simultaneously to all support joints.

Section 125. The 1994 Uniform Building Code is amended by deleting Table 16-C.

Section 126. Section 1701.5 of the 1994 Uniform Building Code is amended as follows:

1701.5 Types of Work. Except as provided in Section 1701.1, the types of work listed below shall be inspected by a special inspector.

1. **Concrete.** During the taking of test specimens and placing of reinforced concrete. See Item 12 for shotcrete.

EXCEPTIONS: 1. Concrete for foundations conforming to minimum requirements of Table 18–I–D or for Group R, Division 3 or Group M, Division 1 Occupancies, provided the building official finds that a special hazard does not exist.

2. For foundation concrete, other than cast–in–place drilled piles or caissons, where the structural design is based on an f'_c no greater than 2,500 pounds per square inch (psi) (17.2 MPa) and where the building official finds the work is of a minor nature and no special hazard exists.

3. Nonstructural slabs on grade, including prestressed slabs on grade when effective prestress in concrete is less than 150 psi. (1.03 MPa).

4. Site work concrete fully supported on earth and concrete where no special hazard exists.

2. **Bolts installed in concrete.** Prior to and during the placement of concrete around bolts when stress increases permitted by Footnote 5 of Table 19–E or Section 1925 are utilized.

3. **Special moment–resisting concrete frame.** As required by Section 1921.9 of this code.

4. **Reinforcing steel and prestressing steel tendons.**

4.1 During all stressing and grouting of tendons in prestressed concrete.

4.2 During placing of reinforcing steel and prestressing tendons for all concrete required to have special inspection by Item 1.

EXCEPTION: The special inspector need not be present continuously during placing of reinforcing steel and prestressing tendons, provided the special inspector has inspected for conformance with the approved plans prior to the closing of forms or the delivery of concrete to the jobsite.

5. Structural Steel.

5.1 General. Fabrication and erection of structural steel members and assemblies.

EXCEPTION: The inspector need not be present during the entire fabrication and erection process provided:

1. Inspection of welding and bolting is in accordance with Items 5.3 and 6 below.

2. That upon completion of fabrication and erection of all members, sizes and grades of steel can be easily identified.

5.2. Erection: Verify grade of steel, size and location of members and assemblies during erection.

5.3 **Structural welding.**

5.3.1 **General.** During the welding of any member or connection which is designed to resist loads and forces required by this code.

EXCEPTIONS: 1. Welding done in an approved AISC-certified fabricator's shop or equivalent ((~~in accordance with Section 1701.7~~)).

2. The special inspector need not be continuously present during welding of the following items, provided the materials, qualifications of welding procedures and welders are verified prior to the start of work; periodic inspections are made of work in progress; and a visual inspection of all welds is made prior to completion or prior to shipment of shop welding:

2.1 Single–pass fillet welds not exceeding $^5/_{16}$ inch (7.9 mm) in size.

2.2 Floor and roof deck welding.

2.3 Welded studs when used for structural diaphragm or composite systems.

2.4 Welded sheet steel for cold–formed steel framing members such as studs and joists.

2.5 Welding of stairs and railing systems.

5.3.2 **Special moment–resisting steel frames.** During the welding of special moment–resisting steel frames. In addition to Item 5.1 requirements above, nondestructive testing as required by Section 1703 of this code.

5.3.3 **Welding of reinforcing steel.** During the welding of reinforcing steel.

EXCEPTION: The special inspector need not be continuously present during the welding of ASTM A 706 reinforcing steel not larger than No. 5 bars used for embedments, provided the materials, qualifications of welding procedures and welders are verified prior to the start of work; periodic inspections are made of work in progress; and a visual inspection of all welds is made prior to completion or prior to shipment of shop welding.

6. **High–strength bolting.** As required by Chapter 22, Division IV. Such inspections may be performed on a periodic basis in accordance with the requirements of Section 1701.6.

7. **Structural masonry.**

7.1 For masonry, other than fully grouted open–end hollow–unit masonry, during preparation and taking of any required prisms or test specimens, placing of all masonry units, placement of reinforcement, inspection of grout space, immediately prior to closing of cleanouts, and during all grouting operations.

EXCEPTION: For hollow–unit masonry where the f'_m is no more than 1,500 psi (10.34 MPa) for concrete units or 2,600 psi (17.93 MPa) for clay units or when one half the allowable masonry stresses are used in design, special inspection may be performed as required for fully grouted open–end hollow–unit masonry specified in Item 7.2 below.

7.2 For fully grouted open–end hollow–unit masonry during preparation and taking of any required prisms or test specimens, at the start of laying units, after the placement of reinforcing steel, grout space prior to each grouting operation, and during all grouting operations.

((~~EXCEPTION: Special inspection as required in Items 7.1 and 7.2 above need not be provided when design stresses have been adjusted as specified in Chapter 21 to permit noncontinuous inspection.~~))

8. **Reinforced gypsum concrete.** When cast–in–place Class B gypsum concrete is being mixed and placed.

9. **Insulating concrete fill.** During the application of insulating concrete fill when used as part of a structural system.

EXCEPTION: The special inspections may be limited to an initial inspection to check the deck surface and placement of reinforcing. The special inspector shall supervise the preparation of compression test specimens during this initial inspection.

10. **Spray–applied fireproofing.** As required by U.B.C. Standard 7–6.

11. **Piling, drilled piers and caissons.** During driving and testing of piles and construction of cast–in–place drilled piles or caissons. See Items 1 and 4 for concrete and reinforcing steel inspection.

12. **Shotcrete.** During the taking of test specimens and placing of all shotcrete and as required by Section 1922.10 and 1922.11.

EXCEPTION: Shotcrete work fully supported on earth, minor repairs and when, in the opinion of the building official, no special hazard exists.

13. **Special grading, excavation and filling.** During earth–work excavations, grading and filling operations inspection to satisfy requirements of Chapter 18 and Appendix Chapter 33 of this code.

14. **Smoke–control systems other than those designed according to Code Alternate CA905.**

14.1 During erection of ductwork and prior to concealment for the purposes of leakage testing and recording of device location.

14.2 Prior to occupancy and after sufficient completion for the purposes of pressure difference testing, flow measurements, and detection and control verification.

15. **Special cases.** Work which, in the opinion of the building official, involves unusual hazards or conditions.

Section 127. Section 1702 of the 1994 Uniform Building Code is amended as follows:

Section **1702 — STRUCTURAL OBSERVATION**

Structural observation shall be provided in Seismic Zone 3 or 4 when one of the following conditions exists:

1. The structure is defined in Table 16–K as Occupancy Category I, II or III, or

2. The structure is required to comply with Section 403, or

3. When so designated by the architect or engineer of record, or

4. When such observation is specifically required by the building official for unusual lateral force-resisting structures or irregular structures as defined in Section 1627, or

5. The structure is designed according to Section 311.2.2.1 and the building above the three-hour occupancy separation is 5 or more stories in height.

The owner shall employ the engineer or architect responsible for the structural design, or another engineer or architect designated by the engineer or architect responsible for the structural design, to perform structural observation as defined in Section 220. Observed deficiencies shall be reported in writing to the owner's representative, special inspector, contractor and the building official. The structural observer shall submit to the building official a written statement that the site visits have been made and identifying any reported deficiencies which, to the best of the structural observer's knowledge, have not been resolved.

Section 128. Section 1703 of the 1994 Uniform Building Code is amended as follows:

Section **1703 — NONDESTRUCTIVE TESTING**

In Seismic Zones 3 and 4, welded connections between the primary members of special moment–resisting frames shall be tested by nondestructive methods for compliance with approved standards and job specifications. This testing shall be a part of the special inspection requirements of Section 1701.5. A program for this testing shall be established by the person responsible for structural design and as shown on plans and specifications.

As a minimum, this program shall include the following:

1. All complete penetration groove welds contained in joints and splices shall be tested 100 percent either by ultrasonic testing or by radiography.

EXCEPTIONS: ((~~When approved, the nondestructive testing rate for an individual welder or welding operator may be reduced to 25 percent, provided the reject rate is demonstrated to be 5 percent or less of the welds tested for the welder or welding operator. A sampling of at least 40 completed welds for a job shall be made for such reduction evaluation. Reject rate is defined as the number of welds containing rejectable defects divided by the number of welds completed. For evaluating the reject rate of continuous welds over 3 feet (914 mm) in length where the effective throat thickness is 1 inch (25.4 mm) or less, each 12 inch increment (305 mm) or fraction thereof shall be considered as one weld. For evaluating the reject rate on continuous welds over 3 feet (914 mm) in length where the effective throat thickness is greater than 1 inch (25.4 mm), each 6 inches (152 mm) of length or fraction thereof shall be considered one weld.~~))

1. For complete penetration groove welds on materials less than $^5/_{16}$ inch (7.9 mm) thick, nondestructive testing is not required; for this welding, continuous inspection is required.

2. When approved by the building official and outlined in the project plans and specifications, this nondestructive ultrasonic testing may be performed in the shop of an approved fabricator utilizing qualified test techniques in the employment of the fabricator.

2. Partial penetration groove welds when used in column splices shall be tested either by ultrasonic testing or radiography when required by the plans and specifications. For partial penetration groove welds when used in

column splices, with an effective throat less than $^3/_4$ inch (19.1 mm) thick, nondestructive testing is not required; for this welding, continuous special inspection is required.

3. Base metal thicker than $1^1/_2$ inches (38.1 mm), when subjected to through–thickness weld shrinkage strains, shall be ultrasonically inspected for discontinuities directly behind such welds after joint completion.

Any material discontinuities shall be accepted or rejected on the basis of the defect rating in accordance with the (larger reflector) criteria of approved national standards.

Section 129. Section 1801.1 of the 1994 Uniform Building Code is amended as follows:

Section **1801 — SCOPE**

1801.1 General. This chapter sets forth requirements for excavation and fills for any building or structure and for foundations and retaining structures. See also Seattle Stormwater, Grading and Drainage Control Code - Title 22 of the Seattle Municipal Code.

((~~Reference is made to Appendix Chapter 33 for requirements governing excavation, grading and earthwork construction, including fills and embankments.~~))

Section 130. Section 1804.5 of the 1994 Uniform Building Code is amended as follows:

1804.5 Liquefaction Potential and Soil Strength Loss. When required by Section 1804.2, the potential for soil liquefaction and soil strength loss during earthquakes shall be evaluated during the geotechnical investigation. The geotechnical report shall assess potential consequences of any liquefaction and soil strength loss, including estimation of differential settlement, lateral movement or reduction in foundation soil–bearing capacity, and discuss mitigating measures. Such measures shall be given consideration in the design of the building and may include, but are not limited to, ground stabilization, selection of appropriate foundation type and depths, selection of appropriate structural systems to accommodate anticipated displacements or any combination of these measures.

The potential for liquefaction and soil strength-loss shall be evaluated for ((~~a site peak ground acceleration that, as a minimum, conforms to the probability of exceedance specified in Section 1629.2. Peak ground acceleration may be determined based on a site-specific study taking into account soil amplification effects. In the absence of such a study, peak ground acceleration may be assumed equal to the seismic zone factor in Table 16-I~~)) an earthquake ground motion that, as a minimum, has a 40% probability of exceedance in 50 years. This is achieved by assuming a near crustal event of magnitude 6.5 directly below the site. Peak ground acceleration may be determined based on a site-specific study taking into account soil amplification effects. In the absence of such a study, peak ground acceleration may be assumed equal to .2g for the purpose of determining liquefaction and soil strength loss.

Section 131. The 1994 Uniform Building Code is amended by adding Section 1809.6 as follows:

1809.6 Group R, Division 3 and Group M Foundations. See Section 1923.10.

Section 132. Table 18-I-A of the 1994 Uniform Building Code is amended as follows:

TABLE 18–I–A—ALLOWABLE FOUNDATION AND LATERAL PRESSURE

CLASS OF MATERIALS[1]	ALLOWABLE FOUNDATION PRESSURE (psf)[2]	LATERAL BEARING LBS./SQ./FT./FT. OF DEPTH BELOW NATURAL GRADE[3]	LATERAL SLIDING[4]	
			Coefficient[5]	Resistance (psf)[6]
	× 0.0479 for kPa	× 0.157 for kPa per meter		× 0.0479 for kPa
1. Massive crystalline bedrock	4,000	1,200	.70	
2. Sedimentary and foliated rock	2,000	400	.35	
3. Sandy gravel and/or gravel (GW and GP)	2,000	200	.35	
4. Sand, silty sand, clayey sand, silty gravel and clayey gravel (SW, SP, SM, SC, GM and GC)	1,500	150	.25	
5. Clay, sandy clay, silty clay and clayey silt (CL, ML, MH and CH)	1,000[7]	100		130

[1]For soil classifications OL, OH and PT (i.e., organic clays and peat), a foundation investigation shall be required.

[2]All values of allowable foundation pressure are for footings having a minimum width of 12 inches (305 mm) and a minimum depth of 12 inches (305 mm) into natural grade. Except as in Footnote 7 below, increase of 20 percent allowed for each additional foot (305 mm) of width or depth to a maximum value of three times the designated value.

[3]May be increased the amount of the designated value for each additional foot (305 mm) of depth to a maximum of 15 times the designated value. Isolated poles for uses such as flagpoles or signs and poles used to support buildings which are not adversely affected by a $^1/_2$–inch (13 mm) motion at ground surface due to short–term lateral loads may be designed using lateral bearing values equal to two times the tabulated values.

[4]Lateral bearing and lateral sliding resistance may be combined.

[5]Coefficient to be multiplied by the dead load. Coefficients do not include a factor of safety.

[6]Lateral sliding resistance value to be multiplied by the contact area. In no case shall the lateral sliding resistance exceed one half the dead load.

[7]No increase for width is allowed.

Section 133. Table 18-I-D of the 1994 Uniform Building Code is amended as follows:

TABLE 18–I–D—FOUNDATIONS FOR STUD BEARING WALLS—MINIMUM REQUIREMENTS[1,2,3]

NUMBER OF FLOORS SUPPORTED BY THE FOUNDATION[4]	THICKNESS OF FOUNDATION WALL (inches)		WIDTH OF FOOTING (inches)	THICKNESS OF FOOTING (inches)	DEPTH BELOW UNDISTURBED GROUND SURFACE (inches)
	× 25.4 for mm				
	Concrete	Unit Masonry	× 25.4 for mm		
1	6	6	12	6	12
2	((~~8~~)) 6	8	((~~15~~)) 12	((~~7~~)) 6	((~~18~~)) 12
3	((~~10~~)) 8	((~~10~~)) 8	((~~18~~)) 15	8	((~~24~~)) 12

[1]Where unusual conditions or frost conditions are found, footings and foundations shall be as required in Section 1806.1.

[2]The ground under the floor may be excavated to the elevation of the top of the footing. Footings beneath floors may rest on grade when the space beneath the floor is surrounded on all sides by footings supporting exterior walls which conform to the depth requirements of this section.

[3]Interior stud bearing walls may be supported by isolated footings. The footing width and length shall be twice the width shown in this table and the footings shall be spaced not more than 6 feet (1829 mm) on center.

[4]Foundations may support a roof in addition to the stipulated number of floors. Foundations supporting roofs only shall be as required for supporting one floor.

Section 134. Section 1905.4 of the 1994 Uniform Building Code is amended as follows:

1905.4 Proportioning by Minimum Cement Content ((~~**Water-Cementitious Materials Ratio**~~)).

1905.4.1 If data required by Section 1905.3 are not available, concrete proportions ((~~shall be based on water-cementitious materials ratio~~)) may be based on minimum cement content limits in Table 19–A–7((~~, if approved by the building official~~)).

1905.4.2 Table 19–A–7 shall be used only for concrete to be made with cements meeting strength requirements for Type I, ((~~I–A,~~)) II, ((~~II–A,~~)) or III((~~, III–A or V; or Type IS, IS–A, IS(MS), IS–A(MS), I(SM), I(SM)–A, IP, IP–A, I(PM), I(PM)–A, IP(MS), IP–A(MS), or P~~)) of U.B.C. Standard 19–1, and shall not be applied to concrete containing lightweight aggregates ((~~or admixtures other than those for entraining air~~)). When approved by the building official, Table No. 19-A-7 may be used with air-entraining admixtures (conforming to ASTM C260) and/or normal-range water-reducing admixtures (conforming to ASTM C494, Types A, D or E).

1905.4.3 Concrete proportioned by minimum cement content ((~~water-cementitious materials ratio~~)) limits prescribed in Table 19–A–7 shall also conform to special exposure requirements of Section 1904 and to compressive strength test criteria of Section 1905.6.

Section 135. Section 1909.3 of the 1994 Uniform Building Code is amended as follows:

1909.3 Design Strength.

1909.3.1 Design strength provided by a member, its connection to other members and its cross sections, in terms of flexure, axial load, shear and tension, shall be taken as the nominal strength calculated in accordance with requirements and assumptions of this code, multiplied by a strength-reduction factor ϕ.

1909.3.2 Strength-reduction factor ϕ shall be as follows:

1909.3.2.1 Flexure, without axial load 0.90

1909.3.2.2 Axial load and axial load with flexure. (For axial load with flexure, both axial load and moment nominal strength shall be multiplied by appropriate single value of ϕ).

Axial tension and axial tension with flexure 0.90

Axial compression and axial compression with flexure:

Members with spiral reinforcement conforming to Section 1910.9.3 ..... 0.75

Other reinforced members 0.70

except that for low values of axial compression, ϕ may be increased in accordance with the following:

For members in which f_y does not exceed 60,000 psi (413.7 Mpa), with symmetric reinforcement, and with $(h - d' - d_s)/h$ not less than 0.70, ϕ may be increased linearly to 0.90 as ϕP_n decreases from $0.10 f'_c A_g$ to zero.

For other reinforced members, ϕ may be increased linearly to 0.90 as ϕP_n decreases from $0.10 f'_c A_g$ or ϕP_b, whichever is smaller, to zero.

1909.3.2.3 Shear and torsion (See also Section 1909.3.4 for shear walls and frames in Seismic Zones 3 and 4) 0.85

1909.3.2.4 Bearing on concrete (See also Section 1918.13 ..... 0.70

1909.3.3 Development lengths specified in Section 1912 do not require a ϕ factor.

1909.3.4 *In Seismic Zones 3 and 4,* strength-reduction factors shall be as given above except for the following:

1909.3.4.1 *The shear strength-reduction factor shall be 0.6 for the design of walls, topping slabs used as diaphragms over precast concrete members and structural framing members, with the exception of joints, if*

their nominal shear strength is less than the shear corresponding to development of their nominal flexural strength. The shear strength-reduction factor for joints shall be 0.85.

((~~1909.3.4.2 The strength-reduction factor for axial compression and flexure shall be 0.5 for all frame members with factored axial compressive forces exceeding ($A_g f_c'/10$) if the transverse reinforcement does not conform to Section 1921.4.4.~~))

Section 136. Section 1922.10 of the 1994 Uniform Building Code is amended as follows:

1922.10. Strength Test. Strength test for shotcrete shall be made by an approved agency on specimens which are representative of work and which have been water soaked for at least 24 hours prior to testing. When the maximum size aggregate is larger than $^3/_8$ inch (9.5 mm), specimens shall consist of not less than three 3-inch-diameter (76 mm) cores or 3-inch (76 mm) cubes. When the maximum size aggregate is $^3/_8$ inch (9.5 mm) or smaller, specimens shall consist of not less than three 2-inch-diameter (51 mm) cores or 2-inch (51 mm) cubes. Specimens shall be taken in accordance with one of the following:

1. From the in-place work: taken at least once each shift or less than one for each 50 cubic yards (38.2 m^3) of shotcrete; or

2. From test panels: made not less than once each shift or not less than one for each 50 cubic yards (38.2 m^3) of shotcrete placed. When the maximum size aggregate is larger than $^3/_8$ inch (9.5 mm), the test panels shall have a minimum dimension of 18 inches by 18 inches by 7 inches (457 mm by 457 mm by 178 mm). When the maximum size aggregate is $^3/_8$ inch (9.5 mm) or smaller, the test panels shall have a minimum dimension of 12 inches by 12 inches by 5 inches (305 mm by 305 mm by 127 mm). Panels shall be gunned in the same position as the work, during the course of the work and by nozzlemen doing the work. The condition under which the panels are cured shall be the same as the work.

The average of three cores from a single panel shall be equal to or exceed 0.85 f'c with no single core less than 0.75 f'c. The average of three cubes taken from a single panel must equal or exceed f'c with no individual cube less than 0.88 f'c. To check testing accuracy, locations represented by erratic core strengths may be retested.

Section 137. Section 1923.3 of the 1994 Uniform Building Code is amended as follows:

1923.3 Materials. Specification for testing and materials shall be in accordance with Section 1903. Plain concrete, other than fill, shall have a specified compressive strength, f'_c, of not less than ((~~2,500~~)) 2,000 psi (((~~17.24~~)) 13.79 MPa).

Section 138. Section 1923.10 of the 1994 Uniform Building Code is amended as follows:

1923.10 Seismic Requirements for Plain Concrete.

1923.10.1 General. The design and construction of plain concrete components that resist seismic forces shall conform to the requirements of Section 1923, except as modified by this subsection.

1923.10.2 Seismic Zones 0 and 1. Structural plain concrete members located in Seismic Zones 0 and 1 shall be designed in accordance with the provisions of Sections 1923.1 through 1923.9.

1923.10.3 Seismic Zones 2, 3 and 4. Structural plain concrete members are not permitted in buildings located in Seismic Zones 2, 3 and 4.

Exceptions: 1. ((~~Footings for buildings of Group R, Division 3 or Group U, Division 1 Occupancy constructed in accordance with Table 18-I-D.~~)) Subject to the approval of the building official, foundations for the support of structures of Type V-N construction for Group R, Division 3 and Group U Occupancies may use plain concrete. Foundations shall also comply with Table No. 18-I-D. There shall not be less than two No. 4 reinforcing bars at the top and bottom of all foundations and at all window and door openings. Such bars shall extend at least 24 inches beyond the corner of the openings and into all intersecting walls.

2. Nonstructural slabs supported directly on the ground or by approved structural systems.

Section 139. Table 19-A-7 of the 1994 Uniform Building Code is amended by deleting Table 19-A-7 and substituting the following:

TABLE 19-A-7—MINIMUM PERMISSIBLE CEMENT CONTENT FOR CONCRETE (WHEN STRENGTH DATA FROM TRIAL BATCHES OR FIELD EXPERIENCE ARE NOT AVAILABLE)

Specified 28-day Compressive Strength in psi (f'_c)	Minimum Permissible Cement Content in Pounds/cu. yd.	Minimum Permissible Cement Content in Std. 94-lb. Sacks/cu. yd.
2000	423	4-1/2[1]
2500	470	5[1]
3000	517	5-1/2
4000[2]	611	6-1/2

MIXES SHALL BE PROPORTIONED TO PRODUCE A FIVE-INCH OR LESS SLUMP. NO MORE THAN A ONE-INCH PLUS TOLERANCE SHALL BE ALLOWED.

[1]Where special inspection is not required under Section 1701.5, the minimum permissible cement content shall be increased 1/2 sack per cubic yard of concrete.

[2]For strengths above 4000 p.s.i., proportions shall be established by the methods specified in Sections 1905.3 or 1905.4.

Section 140. Section 2107.1.2 of the 1994 Uniform Building Code is amended as follows:

2107.1.2 Allowable masonry stresses. When quality assurance provisions do not include requirements for continuous special inspection as prescribed in Section 1701, the allowable stresses for masonry in Section 2107 shall be reduced by one half.

When one half allowable masonry stresses are used in Seismic Zones 3 and 4, the value of f'_m from Table 21-D shall be limited to a maximum of 1,500 psi (10 Mpa) for concrete masonry and 2,600 psi (18 Mpa) for clay masonry unless the value of f'_m is verified by tests in accordance with Section 2105.3.2, Item 3, and Section 2105.3.3, Item 5, unless the value of f'_m is verified during construction by the testing requirements of Section 2105.3.2, Items 1 and 4 or 6. A letter of certification is not required.

When one half allowable masonry stresses are used in Seismic Zones 3 and 4, the value of f'_m shall be limited to 1,500 psi (10 Mpa) for concrete masonry and 2,600 psi (18 Mpa) for clay masonry for Section 2105,3,2, Item 3, and Section 2105.3.2, Item 5, unless the value of f'_m is verified during construction by the testing requirements of Section 2105.3.2, Item 2.

Section 141. Section 2211.7.1 of the 1994 Uniform Building Code is amended as follows:

2211.7.1 Girder-to-column connection.

2211.7.1.1 Required strength. The girder-to-column connection shall be adequate to develop the lesser of the following:

1. The strength of the girder in flexure.

2. The moment corresponding to development of the panel zone shear strength as determined from Formula (11-1).

Exception: Where a connection is not designed to contribute flexural resistance at the joint, it need not develop the required strength if it can be shown to meet the deformation compatibility requirements of Section 1623.2.4.

((~~2211.7.1.2 Connection strength. The girder-to-column connection may be considered to be adequate to develop the flexural strength of the girder if it conforms to the following:~~

~~1. The flanges have full-penetration butt welds to the columns.~~

~~2. The girder web-to-column connection shall be capable of resisting the girder shear determined for the combination of gravity loads and the seismic shear forces which result from compliance with Section 2211.7.2.1. This connection strength need not exceed that required to develop gravity loads plus 3 (R_w/8) times the girder shear resulting from the prescribed seismic forces.~~

~~Where the flexural strength of the girder flanges is greater than 70 percent of the flexural strength of the entire section [i.e., $bt_f(d - t_f)F_{yf} > 0.7Z_xF_y$] the web connection may be made by means of welding or high-strength bolting.~~

~~For girders not meeting the criteria in the paragraph above, the girder web-to-column connection shall be made by means of welding the web directly or through shear tabs to the column. That welding shall have a strength capable of developing at least 20 percent of the flexural strength of the girder web. The girder shear shall be resisted by means of additional welds or friction-type slip-critical high-strength bolts or both.~~

2211.7.1.((~~3~~)) 2 ((~~Alternate c~~))Connection strength. Connection configurations utilizing welds or high-strength bolts ((~~not conforming with Section 2211.7.1.2 may be used if they are shown by~~)) shall demonstrate, by approved cyclic test results or calculation, the ability to sustain inelastic rotation and ((~~to meet the~~)) develop the strength criteria in Section 2211.7.1.1 considering the effect of steel overstrength and strain hardening. ((~~Where conformance is shown by calculation, 125 percent of the strengths of the connecting elements may be used.~~))

2211.7.1.((4)) 3 Flange detail limitations. For steel whose specified ultimate strength is less than 1.5 times the specified yield strength, plastic hinges shall not form at locations in which the beam flange area has been reduced, such as for bolt holes. Bolted connections of flange plates of beam-column joints shall have the net-to-gross area ratio A_e/A_g equal to or greater than 1.2 F_y/F_u.

Section 142. Section 2316.1 of the 1994 Uniform Building Code is amended as follows:

2316.1 Dead Load. Wood members shall not be used to permanently support the dead load of any masonry or concrete.

EXCEPTIONS: 1. Masonry or concrete nonstructural floor, stair landing or roof surfacing not more than 4 inches thick may be supported by wood members. Precast concrete structural stair treads may be supported by wood stringers.

2. Any structure may rest upon wood piles constructed in accordance with the requirements of Chapter 18.

3. Veneer of brick, concrete or stone applied as specified in Section 1403.6.2 may be supported by approved treated wood foundations when the maximum height of veneer does not exceed 30 feet (9144 mm) above the foundation. Such veneer used as an interior wall finish may also be supported on wood floors which are designed to support the additional load, and be designed to limit the deflection and shrinkage to $^1/_{600}$ of the span of the supporting members.

4. Glass block masonry having an installed weight of 20 pounds per square foot (97.6 kg/m^2) or less and installed with the provisions of Section 2109.5. When glass block is supported on wood floors, the floors shall be designed to limit deflection and shrinkage to $^1/_{600}$ of the span of the supporting members and the allowable stresses for the framing members shall be reduced in accordance with Section 2304.3.4, Item 1.

Section 143. Section 2401.1 of the 1994 Uniform Building Code is amended as follows:

2401.1 General. The provisions of this section apply to:

1. Exterior glass and glazing in all occupancies.

EXCEPTION: Groups U and R Occupancies not over three stories in height and located in areas with a minimum basic wind speed ((~~less than~~)) 80 miles per hour (129 km/h) or less.

2. Interior and exterior glass and glazing in all occupancies subject to human impact as specified in Section 2406 and hinged shower doors in all occupancies as specified in Section 2407.

Section 144. Section 2406.4 of the 1994 Uniform Building Code is amended as follows:

2406.4 Hazardous Locations. The following shall be considered specific hazardous locations for the purposes of glazing:

1. Glazing in ingress and egress doors except jalousies.

2. Glazing in fixed and sliding panels of sliding door assemblies and panels in swinging doors other than wardrobe doors.

3. Glazing in storm doors.

4. Glazing in all unframed swinging doors.

5. Glazing in doors and enclosures for hot tubs, whirlpools, saunas, steam rooms, bathtubs and showers. Glazing in any portion of a building wall enclosing these compartments where the bottom exposed edge of the glazing is less than 60 inches (1525 mm) above a standing surface and drain inlet.

6. Glazing in fixed or operable panels adjacent to a door where the nearest exposed edge of the glazing is within a 24–inch (610 mm) arc of either vertical edge of the door in a closed position and where the bottom exposed edge of the glazing is less than 60 inches (1525 mm) above the walking surface.

7. Glazing in an individual fixed or operable panel, other than those locations described in Items 5 and 6 above, that meets all of the following conditions:

7.1 Exposed area of an individual pane greater than 9 square feet (0.84 m^2).

7.2 Exposed bottom edge less than 18 inches (457 mm) above the floor.

7.3 Exposed top edge greater than 36 inches (914 mm) above the floor.

7.4 One or more walking surfaces within 36 inches (914 mm) horizontally of the plane of the glazing.

8. Glazing in railings regardless of height above a walking surface. Included are structural baluster panels and nonstructural in–fill panels.

EXCEPTION: The following products and applications are exempt from the requirements for hazardous locations as listed in Items 1 through 8 above:

1. Glazing in Item 6 when there is an intervening wall or other permanent barrier between the door and the glazing.

2. Glazing in Item 7 when a protective bar is installed on the accessible sides of the glazing 34 inches (864 mm) to 38 inches (965 mm) above the floor. The bar shall be capable of withstanding a horizontal load of 50 pounds per linear foot (729 N/m) without contacting the glass and be a minimum of 1-1/2 inches (38.1 mm) in height.

3. Outboard pane in insulating glass units and in other multiple glazed panels in Item 7 when the bottom exposed edge of the glass is 25 feet (7620 mm) or more above any grade, roof, walking surface or other horizontal or sloped (within 45 degrees of horizontal) surface adjacent to the glass exterior.

4. Openings in door through which a 3-inch-diameter (76.2 mm) sphere will not pass.

5. Assemblies of leaded, faceted or carved glass in Items 1, 2, 6 and 7 when used for decorative purposes.

6. Curved panels in revolving door assemblies.

7. Doors in commercial refrigerated cabinets.

8. Glass block panels complying with Section 2110.

9. Glazing in walls and fences used as the barrier for indoor and outdoor swimming pools and spas when all of the following conditions are present:

9.1 The bottom edge of the glazing is less than 60 inches (1525 mm) above the pool side of the glazing.

9.2 The glazing is within 5 feet (1525 mm) of a swimming pool or spa deck area.

10. Glazing in walls ((~~enclosing~~)) at stairway landings ((~~or~~)) within the width of the stair and within 5 feet (1525 mm) ((~~of~~)) beyond the bottom and top of ((~~stairways~~)) flights of stairs, where the bottom edge of the ((~~glass~~)) glazing is less than 60 inches (1525 mm) above a walking surface. See Figure 24-1 for an illustration.

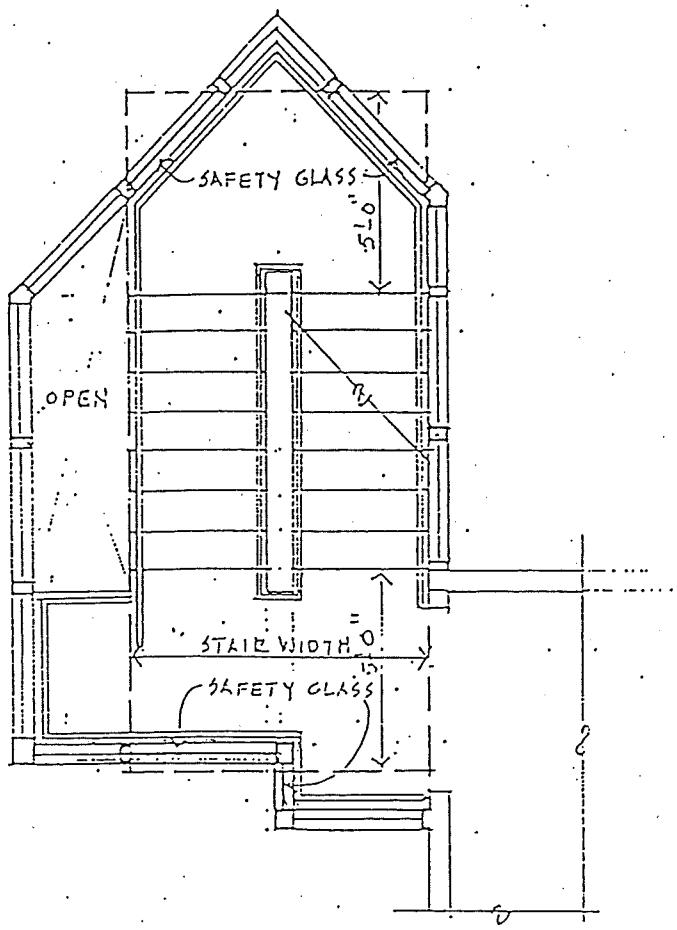

FIGURE 24-1

Note: Refers to 2406.4, item 10 only. See also 2406.4, items 6,7,8 and Exceptions for other applicable requirements.

Figure 24-1 is a Seattle amendment to the Uniform Building Code.

Section 145. Section 2512 of the 1994 Uniform Building Code is amended as follows:

Section 2512 — USE OF GYPSUM IN SHOWERS AND WATER CLOSETS

When gypsum is used as a base for tile or wall panels for tub, shower or water closet compartment walls (see Sections 807.1.2 and 807.1.3), water–resistant gypsum ((~~backing~~)) board shall be used. Regular gypsum wallboard is permitted under tile or wall panels in other wall and ceiling areas when installed in accordance with Table 25–G. Water–resistant gypsum board shall not be used in the following locations:

1. Over a vapor retarder.

2. In areas subject to continuous high humidity, such as saunas, steam rooms or gang shower rooms.

3. On ceilings where frame spacing exceeds ((~~12~~)) 16 inches (((~~305~~)) 406 mm) on center.

Section 146. Section 2602.4 of the 1994 Uniform Building Code is amended as follows:

2602.4 Thermal Barrier. The interior of the building shall be separated from the foam plastic insulation by an approved thermal barrier having an index of 15 when tested in accordance with U.B.C. Standard 26–2. The thermal barrier shall be installed in such a manner that it will remain in place for the time of its index classification based on approved diversified tests.

EXCEPTION: The thermal barrier is not required:

1. For siding backer board, provided the foam plastic insulation is not of more than 2,000 Btu per square foot (22.7 MJ/m^2) as determined by U.B.C. Standard 26–1 and when it is separated from the interior of the building by not less than 2 inches (51 mm) of mineral fiber insulation or equivalent, or applied as re–siding over existing wall construction.

2. For walk–in coolers and freezer units having an aggregate floor area less than 400 square feet (37.2 m^2).

3. In a masonry or concrete wall, floor or roof system when the foam plastic insulation is covered by a minimum of 1–inch (25 mm) thickness of masonry or concrete. Loose–fill type foam plastic insulation shall be tested as board stock for flame spread and smoke development as described above.

4. Within an attic or crawl space where entry is made only for service of utilities, and when foam plastic insulation is covered with a material such as $1^1/_2$–inch–thick (38 mm) mineral fiber insulation, $^1/_4$–inch–thick (6.4 mm) plywood, hardboard or gypsum wallboard, corrosion–resistant sheet metal having a base metal thickness not less than 0.0160 inch (0.4 mm) at any point, or other approved material installed in such a manner that the foam plastic insulation is not exposed.

5. In cooler and freezer walls when:

5.1 The foam plastic insulation has a flame–spread rating of 25 or less when tested in a minimum 4–inch (102 mm) thickness;

5.2 Has flash and self–ignition temperatures of not less than 600°F. and 800°F. (316°C. and 427°C.), respectively;

5.3 Is covered by not less than 0.032–inch (0.8 mm) aluminum or corrosion–resistant steel having a base metal thickness not less than 0.0160 inch (0.4 mm) at any point; and

5.4 Is protected by an automatic sprinkler system. When the cooler or freezer is within a building, both the cooler or freezer and that part of the building in which it is located shall be sprinklered.

Interpretation I2602.4: For the purposes of this section, 1/2 inch thick gypsum wallboard is acceptable as an approved thermal barrier.

Section 147. Section 2603.6 of the 1994 Uniform Building Code is amended as follows:

2603.6 Roof Panels. Approved plastic roof panels may be installed in roofs of buildings not required to have a fire–resistive rating, subject to the following limitations:

1. Individual roof panels or units shall be separated from each other by distances of not less than 4 feet (1219 mm) measured in a horizontal plane.

2. Roof panels or units shall not be installed within that portion of a roof located within a distance to property line or public way where openings in exterior walls are prohibited or required to be protected, whichever is most restrictive.

((~~3. Roof panels of Class CC1 plastics shall be limited to a maximum individual panel area of 150 square feet (13.9 m2), and the total maximum aggregate area of all panels shall not exceed 33-1/3 percent of the floor area of the room or space sheltered. Roof panels of Class CC2 plastics shall be limited to a maximum individual panel area of 100 square feet (9.3 m2), and the total maximum aggregate area of all panels shall not exceed 25 percent of the floor area of the room or space sheltered.~~))

3. Each roof panel shall be limited to a maximum individual panel area of 100 square feet (9.3 m^2) for Class CC2 material and 150 square feet (13.9 m^2) for Class CC1 material.

EXCEPTIONS: 1. Swimming pool shelters are exempt from ((~~the~~)) area limitations ((~~of Section 2603.6~~)), provided such shelters do not exceed 5,000 square feet (464.5 m^2) in area and are not closer than 10 feet (3048 mm) to the property line or adjacent building.

2. Except for Group A, Division 1 and 2, Group I and Group H, Divisions 1, 2 and 3 Occupancies, the maximum area need not be limited where roof panels are:

2.1 Serving as a fire-venting system complying with this code, or

2.2. Used in a building equipped with an approved automatic sprinkler system throughout.

3. Detached carports, patio covers or roofed decks accessory to detached dwellings are exempt from the requirements of this section provided the roof panels are located at least 10 feet from adjacent buildings and property lines and their floor area does not exceed 250 square feet (23.2 m^2).

4. Attached carports, patio covers or roofed decks accessory to detached dwellings are exempt from the requirements of this section provided the roof panels are of an approved type as defined in this chapter, they are located at least 5 feet (1524 mm) from adjacent property lines and their area does not exceed 250 square feet (23.2 m^2).

The aggregate area of roof panels installed in the roof shall not exceed 33-1/3 percent of the floor area of the room or space sheltered by the roof when Class CC1 materials are used and 25 percent when Class CC2 materials are used.

EXCEPTION: Swimming pool shelters are exempt from the area provisions of this section provided such shelters do not exceed 5,000 square feet (465 m^2) in area and are not closer than 10 feet (3048 mm) to the property line or adjacent buildings.

Section 148. Section 2802 of the 1994 Uniform Building Code is amended as follows:

Section **2802 — REFRIGERATION SYSTEM MACHINERY ROOM**

Refrigeration systems shall comply with the Mechanical Code. When a refrigeration machinery room is required, it shall be separated from the remainder of the building or located on the property as required for a Group H, Division 7 Occupancy, regardless of area. A horizontal occupancy separation may be limited to the actual floor area of the machinery room. Structural supporting elements shall be protected for the type of construction only and not the occupancy separation. Exits from the machinery room shall comply with Section 1020. Nothing contained herein shall be used to limit the height or area of the building or the machinery room. The refrigeration system, its refrigerant and its safety devices shall be maintained in accordance with the Fire Code.

Code Alternate CA2802: A three-hour occupancy separation with doors gasketed on four sides may be used in lieu of a four-hour occupancy separation.

Section 149. Chapter 29 of the 1994 Uniform Building Code is amended as follows:

Chapter 29

PLUMBING SYSTEMS

Section 2901 — PLUMBING AND FOOD CODES

Plumbing systems shall comply with the Plumbing Code. See also the Seattle Food Code, SMC Title 10, Subchapter XLI.

Section 2902 — NUMBER OF FIXTURES

2902.1 General. The number of plumbing fixtures within a building shall not be less than set forth in Section 2902 and Table 29-A. Authority to enforce this requirement is vested in the Director of Public Health.

2902.2 Group A Occupancies. In Group A Occupancies at least ((~~one lavatory for each two water closets for each sex shall be provided at an approved location. At least~~)) one drinking fountain shall be provided at each floor level in an approved location.

EXCEPTION: A drinking fountain need not be provided in a drinking or dining establishment.

For other requirements on ((~~water closets~~)) plumbing fixtures, see Sections ((~~806~~)) 807, ((~~and~~)) 2903, 2904 and Table 29-A ((~~and Chapter 11 for access to water closets and drinking fountains~~)).

2902.3 Groups B, F, H, M and S Occupancies. In Groups B, F, H, M and S Occupancies, buildings or portions thereof where persons are employed shall be provided with at least one water closet. Separate facilities shall be provided for each sex when the number of employees exceeds four. Such toilet facilities shall be located either in such building or conveniently in a building adjacent thereto on the same property.

Such water closet rooms in connection with food establishments where food is prepared, stored or served shall have a nonabsorbent interior finish as specified in Section 807.1, shall have hand–washing facilities therein or adjacent thereto, and shall be separated from food preparation or storage rooms as specified in Section 302.6.

For other requirements on ((~~water closets~~)) plumbing fixtures, see Sections 807, 2903, 2904 and Table 29-A.

2902.4 Group E Occupancies. The number of plumbing fixtures within a building shall not be less than set forth in Table 29-A. ((~~Water closets shall be provided on the basis of the following ratio of water closets to the number of students:~~

	~~Boys~~	~~Girls~~
~~Elementary Schools~~	~~1:100~~	~~1:35~~
~~Secondary Schools~~	~~1:100~~	~~1:45~~

~~In addition, urinals shall be provided for boys on the basis of 1:30 in elementary and secondary schools.~~

~~There shall be provided at least one lavatory for each two water closets or urinals, and at least one drinking fountain on each floor for elementary and secondary schools.~~))

For other requirements on ((~~water closets~~)) plumbing fixtures, see Sections ((~~806~~)) 807, ((~~and~~)) 2903 and 2904.

2902.5 Group I Occupancies. The number of plumbing fixtures within a building shall not be less than set forth in Table 29-A. ((~~In Group I Occupancies, sanitation facilities for employees shall be provided as specified in Section 2902.3. Additional sanitation facilities shall be provided for other occupants when the facilities for employees are not accessible to such other occupants.~~))

For other requirements on ((~~water closets~~)) plumbing fixtures, see Sections ((~~806~~)) 807, ((~~and~~)) 2903, and 2904.

2902.6 Group R Occupancies. The number of plumbing fixtures within a building shall not be less than set forth in Table 29-A. ((~~Buildings classified as Group R Occupancies shall be provided with at least one water closet. Hotels or subdivisions thereof where both sexes are accommodated shall contain at least two separate toilet facilities which are conspicuously identified for male or female use, each of which contains at least one water closet.~~

~~EXCEPTION: Hotel guest rooms may have one unidentified toilet facility.~~

~~Additional water closets shall be provided on each floor for each sex at the rate of one for every additional 10 guests, or fractional part thereof, in excess of 10.~~

~~Dwelling units shall be provided with a kitchen equipped with a kitchen sink. Dwelling units, congregate residences and lodging houses shall be provided with a bathroom equipped with facilities consisting of a water closet, lavatory and either a bathtub or shower. Each sink, lavatory and either a bathtub or shower shall be equipped with hot and cold running water necessary for its normal operation.~~))

2902.6.1 Dwelling Units. Dwelling units and congregate residences shall contain within a separate room(s), accessible from inside the dwelling unit or residence, a water closet, a lavatory, and a bathtub or shower.

2902.6.2 Hotels and Other Buildings Containing Guest Rooms. In hotels and other buildings containing guest rooms, where private water closets, lavatories and baths are not provided, there shall be provided on each floor at least one water closet and lavatory and one bathtub or shower accessible from a public hallway. Additional water closets, lavatories, and bathtubs or showers shall be provided on each floor at the rate of one for every additional 8 guests or occupants, or fractional number thereof in excess of 8.

On floors with fewer than 8 occupants, the required sanitary facilities may be provided on an adjacent floor if the floor on which the facilities are provided is directly and readily accessible to such occupants and if such use does not cause the facilities to be used by a total of more than 8 persons.

2902.6.3 Kitchens. Dwelling units and congregate residences shall be provided with a kitchen. Kitchens shall be provided with a kitchen sink, hot and cold running water.

2902.6.4 Fixtures. All plumbing fixtures shall be trapped and vented and connected to a sanitary sewer or to an approved private sewage disposal system. There shall be an approved system of water supply, providing both hot and cold running water at a rate of not less than one gallon per minute. All water closets shall be flush type in good working order.

Exception: Composting toilets shall comply with standards specified by the Director of Public Health.

For other requirements on ((~~water closets~~)) plumbing fixtures, see Sections ((~~806~~)) 807, ((~~and~~)) 2903, 2904 and Table 29-A.

Section 2903 — ((~~ALTERNATE NUMBER OF FIXTURES~~)) ACCESSIBILITY

((~~As an alternate to the minimum number of plumbing fixtures required by this chapter, see Appendix Chapter 29. When adopted, as set forth in Section 101.3, it will take precedence over the requirements of this chapter.~~))

For accessibility requirements for all plumbing fixtures, see Chapter 11 of the Washington State Building Code.

Section 2904 — ((~~ACCESS TO WATER CLOSET STOOL~~)) PLUMBING FIXTURES

2904.1 Water Closet Space requirements. The water closet stool in all occupancies shall be located in a clear space not less than 30 inches (762 mm) in width. The clear space in front of the water closet stool shall not be less than 24 inches (610 mm).

2904.2 Drinking Fountains. Drinking fountains shall not be installed in toilet rooms.

2904.3 Finishes. See Section 807 for wall and floor finishes.

((~~See Chapter 11 for requirements for water closets on floors required to be accessible to persons with disabilities.~~))

Section 150. The 1994 Uniform Building Code is amended by adopting Appendix Table 29-A and amending it as follows:

TABLE 29-A—MINIMUM PLUMBING FIXTURES[1, 2, 3,4,6]

TYPE OF BUILDING OR OCCUPANCY((4))	WATER CLOSETS((5,))[3] (fixtures per person) MALE	WATER CLOSETS((5,))[3] (fixtures per person) FEMALE	LAVATORIES((6))[5] (fixtures per person) MALE	LAVATORIES((6))[5] (fixtures per person) FEMALE	BATHTUB OR SHOWER (fixtures per person)
For the occupancies listed below, use 30 square feet (2.29 m^2) per occupant for the minimum number of plumbing fixtures.					
Group A Conference rooms, dining rooms, drinking establishments, exhibit rooms, gymnasiums, lounges, stages and similar uses including restaurants classified as Group B Occupancies	1:1–25 2:26–75 3:76–125 4:126–200 5:201–300 6:301–400 Over 400, add one fixture for each additional 200 males or 150 females.	1:1–25 2:26–75 3:76–125 4:126–200 5:201–300 6:301–400	((~~one for each water closet up to four; then one for each two additional water closets~~)) one per 2 water closets		
For the assembly occupancies listed below, use the number of fixed seating or, where no fixed seating is provided, use 15 square feet (1.39 m^2) per occupant for the minimum number of plumbing fixtures.					
Assembly places— Theaters, Auditoriums, convention halls, dance floors, lodge rooms, ((~~stadiums~~)) and casinos	((~~1:1–50~~ ~~2:51–100~~ ~~3:101–150~~ ~~4:151–300~~ 1:1-100 2:101-200 3:201-400 Over ((~~300~~)) 400 males, add one fixture for each additional ((~~200~~)) 500, and over 400 females add one for each ((~~125~~)) 50.	~~3:1–50~~ ~~4:51–100~~ ~~6:101–200~~ ~~8:201–400~~)) One per 25 up to 400	1:1–200 2:201–400 3:401–750 Over 750, add one fixture for each additional 500 persons.	1:1–200 2:201–400 3:401–750	
For the assembly occupancies listed below, use the number of fixed seating or, where no fixed seating is provided, use 30 square feet (2.29 m^2) per occupant for the minimum number of plumbing fixtures.					
Worship places Principal assembly area Worship places Educational and activity unit	one per 150 one per 125	one per 75 one per 75	one per 2 water closets one per 2 water closets		
For the assembly occupancies listed below, use the number of fixed seating or, where no fixed seating is provided, use 15 square feet (1.39 m^2) per occupant for the minimum number of plumbing fixtures.					
Assembly places— Stadiums, arenas and sporting facilities	1:1-100 2:101-200 3:201-400 Over 400 males, add one fixture for each additional 500, and over 400 females add one for each 100.	One per 50 up to 400	1:1–200 2:201–400 3:401–750 Over 750, add one fixture for each additional 500 persons.	1:1–200 2:201–400 3:401–750	

TABLE 29–A—MINIMUM PLUMBING FIXTURES[1, 2, 3,4,6] (Continued)

TYPE OF BUILDING OR OCCUPANCY((4))	WATER CLOSETS((6))[3] (fixtures per person) MALE	WATER CLOSETS((6))[3] (fixtures per person) FEMALE	LAVATORIES((6))[5] (fixtures per person) MALE	LAVATORIES((6))[5] (fixtures per person) FEMALE	BATHTUB OR SHOWER (fixtures per person)
For the occupancies listed below, use 200 square feet (18.58 m^2) per occupant for the minimum number of plumbing fixtures.					
Group B	1:1–15 2:16–35 3:36–55 Over 55, add one for each ((~~50~~)) 75 persons.	1:1–15 2:16–35 3:36–55	one per 2 water closets		
For the occupancies listed below, use ((~~50~~)) 100 square feet (((~~4.65~~)) 9.3 m^2) per ((~~occupant~~)) student for the minimum number of plumbing fixtures.					
Group E Schools—for staff use All schools (One staff per 20 students)	1:1–15 2:16–35 3:36–55 Over 55, add one fixture for each additional 40 persons.	1:1–15 2:16–35 3:36–55	((~~one per 40~~ ~~one per 40~~)) one per two water closets		
Schools—for student use Day care	1:1–20 2:21–50 Over 50, add one fixture for each additional 50 persons.	1:1–20 2:21–50	((~~1:1–25~~ ~~1:1–25~~ ~~2:26–50~~ ~~2:26–50~~)) 1:1-20 1:1-20 2:21-50 2:21-50 Over 50, add one fixture for each additional 50 persons.		
Elementary	one per 30	one per 25	((~~one per 35~~ ~~one per 35~~)) one per two water closets		
Secondary	one per 40	one per 30	((~~one per 40~~ ~~one per 40~~)) one per two water closets		
For the occupancies listed below, use 50 square feet (4.65 m^2) per occupant for the minimum number of plumbing fixtures.					
Education Facilities other than Group E Others (colleges, universities, adult centers, etc.)	one per 40	one per ((~~30~~)) 25	((~~one per 40~~ ~~one per 40~~)) one per two water closets		
For the occupancies listed below, use 2,000 square feet (185.8 m^2) per occupant for the minimum number of plumbing fixtures.					
Group F Workshop, foundries and similar establishments, and Group H Occupancies	1:1–10 2:11–25 3:26–50 4:51–75 5:76–100 Over 100, add one fixture for each additional 300 persons.	1:1–10 2:11–25 3:26–50 4:51–75 5:76–100	one for each two water closets		one shower for each 15 persons exposed to excessive heat or to skin contamination with irritating materials

TABLE 29–A—MINIMUM PLUMBING FIXTURES[1, 2, 3,4,6]—(Continued)

For the occupancies listed below, use the designated application and 200 square feet (18.58 m^2) per occupant of the general use area for the minimum number of plumbing fixtures.			
Group I[7] Hospital waiting rooms Hospital general use areas	one per room (usable by either sex) 1:1–15 1:1–15 2:16–35 3:16–35 3:36–55 4:36–55 Over 55, add one fixture for each additional 40 persons.	one per room one per each two water closets	
Hospitals Patient rooms: Single bed Isolation ((~~Ward room~~)) Multi-bed Long-term	one ((~~per room~~))adjacent to and directly accessible from one ((~~per room~~))adjacent to and directly accessible from one per ((~~eight~~)) four patients one per four patients	one per toilet room one per toilet room one per ((~~10~~)) four patients one per four patients	one per toilet room one per toilet room one per ((~~20~~)) 8 patients one per 15 patients
Jails and reformatories Cell Exercise room	one per cell one per exercise room	one per cell one per exercise room	
Other institutions (on each occupied floor)	one per 25 one per 25	((~~one per 10~~)) ((~~one per 10~~)) one per two water closets	one per eight
For the occupancies listed below, use 200 square feet (18.58 m^2) per occupant for the minimum number of plumbing fixtures.			
Group M Retail or wholesale stores	1:1–50 1:1–50 2:51–100 2:51–100 3:101–400 3:101–200 4:201–300 5:301–400 Over 400, add one fixture for each additional 500 males and one for each 150 females.	One for each two water closets.	

TABLE 29–A—MINIMUM PLUMBING FIXTURES[1, 2, 3,4,6] (Continued)

For Group R Occupancies, dwelling units and hotel guest rooms, use the chart. For congregate residences, use 200 square feet (18.58 m^2) for Group R, Division 1 Occupancies and 300 square feet (27.87 m^2) for Group R, Division 3 Occupancies for the minimum plumbing fixtures.			
Group R Dwelling units Hotel guest rooms	one per dwelling unit one per guest room	one per dwelling unit one per guest room	one per dwelling unit one per guest room
Congregate residences	one per 10 one per eight Over 10, ((~~A~~))add one fixture for each additional 25 males and, over 8, add one for each additional 20 females.	one per 12 one per 12 Over 12, add one fixture for each additional 20 males and one for each additional 15 females.	one per eight For females, add one ((~~bathtub~~)) additional unit per each additional 30. Over 150, add one additional unit per 20 females.
For the occupancies listed below, use 5,000 square feet (464.5 m^2) per occupant for the minimum number of plumbing fixtures.			
Group S Warehouses	1:1–10 1:1–10 2:11–25 2:11–25 3:26–50 3:26–50 4:51–75 4:51–75 5:76–100 5:76–100 Over 100, add one for each 300 males and females.	One per 40 occupants of each sex.	one shower for each 15 persons exposed to excessive heat or to skin contamination with poisonous, infectious or irritating materials

[1]The figures shown are based on one fixture being the minimum required for the number of persons indicated or any fraction thereof.

[2]Any category not mentioned specifically or about which there are any questions shall be classified by the building official and included in the category which it most nearly resembles, based on the expected use of the plumbing facilities.

[3]Where urinals are provided, one water closet less than the number specified may be provided for each urinal installed, except the number of water closets in such cases shall not be reduced to less than one half of the minimum specified. For men's facilities serving 26 or more persons, not less than one urinal shall be provided.

[4]((~~Drinking fountains shall not be installed in toilet rooms.~~)) Occupant loads over 30 shall have one drinking fountain for each 150 occupants.

[5]Twenty–four inches (610 mm) of wash sink or 18 inches (457 mm) of a circular basin, when provided with water outlets for such space, shall be considered equivalent to one lavatory.

[6]When the design occupant load is less than 10 persons, a facility usable by either sex may be approved by the building official.

NOTE: Occupant loads over 30 shall have one drinking fountain for each 150 occupants.

[7]See WAC 246-318-690 for definitions, other fixtures and equipment for hospitals.

Section 151. The 1994 Uniform Building Code is amended by adding Chapter 30 as follows:

CHAPTER 30

ELEVATORS, DUMBWAITERS, MATERIAL LIFTS, ESCALATORS AND MOVING WALKS

Note: This chapter is entirely Seattle amendments to the Uniform Building Code and is not underlined.. Where ASME rules are reproduced, Seattle amendments are indicated by strike through and underline.

Section 3001 — PURPOSE

The purpose of this chapter is to protect persons, buildings and the contents thereof from hazards arising from the use of elevators, dumbwaiters, material lifts, escalators and/or moving walks by establishing minimum requirements regulating the design, construction, alteration, operation and maintenance of elevators, dumbwaiters, material lifts, escalators and moving walks, and by establishing procedures by which these requirements may be enforced.

Section 3002 — SCOPE

3002.1 General. This code of safety standards covers the design, construction, installation, operation, inspection testing, maintenance, alteration and repair of elevators, dumbwaiters, material lifts, escalators, moving walks and their hoistways.

3002.2 Application to Existing Conveyances.

3002.2.1 Minimum Standard for Existing Conveyances. All existing conveyances shall comply with Washington Administrative Code (WAC) Chapter 296-95 as a minimum standard.

3002.2.2 Maintenance. All conveyances covered under this chapter, both existing and new, and all parts thereof shall be maintained in a safe condition. All devices and/or safeguards which are required by this chapter shall be maintained in good working order. All devices or safeguards which were required by a code in effect when the conveyance was installed, altered, or repaired shall be maintained in good working order. The owner or his/her designated agent shall be responsible for the maintenance of such equipment.

3002.2.3 Repairs and Replacements. Repairs to existing conveyances and replacements of devices and components shall be made with parts of at least equivalent material, strength and design. They shall comply with Washington Administrative Code Chapter 296-95. In addition, repairs shall comply with ASME A17.1 Rule 1200.4, and replacements shall comply with ASME A17.1 Rule 1200.5.

3002.2.4 Additions and Alterations. Additions and alterations may be made to the conveyance system of existing buildings or structures without making the entire system comply with all of the requirements of this chapter for new buildings or structures, provided the additions and alterations that are made shall comply with the requirements of this chapter for a new system, except as otherwise specifically provided in this code and in other applicable retroactive ordinances of the city.

Unless otherwise approved by the building official, alterations, repairs, replacements and maintenance of conveyances shall comply with the requirements of Part XII of ASME A17.1. Where Part XII refers to a requirement which has been amended by this chapter, the requirements of this chapter shall take precedence. Where Part XII refers to ASME A17.3, the requirements of WAC 296-95 shall apply. Alterations to existing material lifts shall conform with the requirements of WAC Chapter 296-93.

3002.2.5 Seismic Improvements. When seismic improvements are made to existing conveyances the requirements of ASME A17.1, Part 24 are superseded by the following:

The anchorage of the elevator drive and suspension systems shall be designed in accordance with Section 1630 for a lateral force based upon a Cp value of 1.25 unless data substantiating a lesser value is furnished. Stress values may be increased 1/3 in accordance with Section 1603.5. Calculation of loads shall be applied to produce maximum stress. Elevator drive and suspension systems requiring seismic anchorage shall include:

1. **Cabled Elevators**

1.1 Machine room equipment.

1.2 Counterweight system.

1.2.1 Weights and rails.

1.2.2 Deflection and compensation sheaves.

1.3 Car sling and rails system.

2. **Hydraulic Elevators**

2.1 Machine room equipment.

2.2 Hydraulic lines of hydraulic elevators shall not cross building seismic joints.

2.3 Hydraulic elevators shall have a safety valve in accordance with ASME A17.1-1993, Rule 2410.6.

3002.2.6 Change of Use. When the use of an existing freight elevator is changed to conveyance of passengers, the elevator must comply with the retroactive requirements of this code and WAC 296-95 for passenger elevators.

3002.2.7 Historic Buildings and Structures. See Section 3403.9 for regulations regarding historic buildings or structures.

3002.3 References to the National Electrical Code. For the purpose of this chapter, all references in the ASME Code to the National Electrical Code shall include the Seattle Electrical Code. All electrical work shall be done in accordance with the requirements of the Seattle Electrical Code.

3002.4 Conflicts. In any case where the codes adopted by reference in Section 3003 conflict with the requirements of this chapter, this chapter shall control.

SECTION 3003 — CODES ADOPTED BY REFERENCE

The following codes are hereby adopted by reference and together with the provisions of this chapter shall constitute the Elevator Code of the City of Seattle. A copy of each is filed with the City Clerk.

1. Safety Code for Elevators and Escalators, ASME A17.1-1993 with ASME A17.1a-1994 Addenda.

EXCEPTION: Part XIX of ASME A17.1, Elevators Used for Construction, is not adopted.

2. The building official may adopt by administrative rule, in accordance with Section 104.17 of this code, addenda to the Safety Code for Elevators and Escalators, ASME A17.1-1993 which further the intent and purpose of this code, which encourage the use of state of the art technology, materials or methods of construction, and which provide standards which are equal or better than those contained in this code.

3. Safety rules governing elevators, dumbwaiters, escalators and other lifting devices - moving walks, Washington Administrative Code Chapter 296-81, Sections .005 through .370, inclusive, effective January 1, 1993. All references to WAC 296-81 shall apply to new conveyances only.

4. Safety regulations for casket lifts in mortuaries, Washington Administrative Code Chapter 296-91, 1986 Edition.

5. Chapter 296-93 Washington Administrative Code for Material Lifts, 1986 Edition.

6. Chapter 296-95 Washington Administrative Code establishes minimum standards for all existing conveyances. All references to A17.3 in Part XII of ASME A17.1 shall mean WAC 296-95.

SECTION 3004 — DEFINITIONS

The following definitions are in addition to Section 3 of ASME A17.1, RCW 70.87, Laws Governing Elevators and Other Lifting Devices, and Chapter 2 of this code.

ALTERATIONS, REPAIRS AND REPLACEMENTS - See Part XII, ASME A17.1.

ASME CODE shall mean the American National Standard Safety Code for Elevators and Escalators with Appendices A through I, published by the American Society of Mechanical Engineers, designated ASME A17.1 - 1993.

AUTOMATIC ELEVATOR shall mean a type of elevator which does not require an attendant. All calls are registered by the passengers.

AUTOMOBILE PARKING ELEVATOR shall mean an elevator located in either a stationary or horizontally moving hoistway and used exclusively for parking automobiles where, during the parking process, each automobile is moved under its own power onto and off the elevator directly into parking spaces or cubicles in line with the elevator and where no persons are normally stationed on any level except the receiving level.

CONVEYANCE shall mean an elevator, escalator, dumbwaiter, material lift, automobile parking elevator or moving walk.

CONVEYANCES IN SERVICE shall mean that the units are in operation, are inspected and certified for operation by the building official.

CONVEYANCES OUT OF SERVICE shall mean the use of the unit has been prohibited either temporarily or permanently in accordance with Section 3105 below.

ENFORCING AUTHORITY as used in the ASME Code means the building official.

EXISTING INSTALLATIONS means all conveyances which have been tested and approved for use by the building official.

INSPECTOR means inspectors employed by the City of Seattle and working under order from the building official.

MATERIAL LIFT means a fixed, stationary conveyance that:

1. Has a car or platform that moves in guides;

2. Serves two or more floors or landings of a building or structure;

3. Has a vertical rise of at least five feet (1524 mm) and no more than sixty feet (18 288 mm);

4. Has a maximum speed of fifty feet (15 240 mm) per minute;

5. Is an isolated, self-contained lift and is not a part of a conveying system;

6. Travels in an inclined or vertical, but not horizontal, direction;

7. Is operated only by, or under the direct supervision of, an individual designated by the employer; and

8. Is installed in a commercial or industrial area, and not in an area that is open to access by the general public.

OTHER LIFTING DEVICES as regulated by WAC 296-81 shall include the equipment listed under Section 1.1 of ASME A17.1. The building official shall have the responsibility for making a decision as to whether the proposed installation and use of the device is subject to the requirements of this chapter.

SECTION 3005 — AUTHORITY TO DISCONNECT UTILITIES, TAKE CONVEYANCES OUT OF SERVICE AND INVESTIGATE ACCIDENTS

3005.1 Disconnection of Utilities. In addition to the provisions for Emergency Orders provided in Section 102.2 of this code, the building official shall have the authority to disconnect or order discontinuance of any utility service or energy supply to equipment regulated by this code in cases of emergency or where necessary for safety to life and property. Such utility service shall be discontinued until the equipment, appliances, devices or wiring found to be defective or defectively installed are replaced, repaired, or restored to a safe condition. Proper posting and seals shall be affixed to the equipment to prevent inadvertent use.

3005.2 Conveyances Out of Service. A conveyance shall be taken out of service temporarily after the building official has inspected the unit for proper parking of the car, securing the hoistway openings, and disconnection of power. A seal and tag shall be placed on the equipment to insure against unauthorized use. A conveyance may remain in a temporarily out-of-service status for a period not to exceed two years, after which time it shall be placed in a permanently out-of-service status.

EXCEPTION: Elevators which could be returned to service without repair may remain in a temporary out-of-service status with approval of the building official.

A conveyance shall be deemed permanently out of service by landing the car and counterweights and removing the hoisting cables or fluid lines. Conveyances placed in a permanently out-of-service status shall have the hoistway sealed off for fire protection by securing existing doors.

Conveyances in an out-of-service status either temporarily or permanently may be placed back into service and classified as an existing installation unless determined to be hazardous by the building official. Requirements in effect at that time must be completed before certification and use. No installation or reconnection of hydraulic elevators powered by city water pressure will be permitted.

3005.3 Report and Investigation of Accidents. The owner or the owner's authorized agent shall promptly notify the building official of each accident involving a conveyance which requires the service of a physician or results in a disability exceeding one day, and shall afford the building official every facility for investigating and inspecting the accident. The building official shall without delay, after being notified, make an inspection and shall place on file a full and complete report of the accident. The report shall give in detail all material facts and information available and the cause or causes, so far as they can be determined. The report shall be open to public inspection at all reasonable hours. When an accident involves the failure or destruction of any part of the construction or the operating mechanism of a conveyance, the use of the conveyance is forbidden until it has been made safe; it has been reinspected and any repairs, changes, or alterations have been approved by the department; and a permit has been issued by the building official. The removal of any part of the damaged construction or operating mechanism from the premises is forbidden until the building official grants permission to do so.

SECTION 3006 — INSTALLATION AND ALTERATION PERMITS

3006.1 Installation Permits. A permit issued by the building official shall be required to install any elevator, escalator, dumbwaiter, automobile parking elevator, material lift or moving walk. A separate permit shall be obtained for each conveyance installed regardless of location and/or contract arrangements.

3006.2 Alteration/Repair Permits. A permit is required to make any alterations to existing elevators, escalators, dumbwaiters, automobile parking elevators, material lifts, moving walks or lifts for people with disabilities. A separate permit shall be obtained for each conveyance altered or relocated regardless of location and/or contract arrangements.

EXCEPTIONS: 1. Permits for repairs required by inspection reports may be combined for a single building.

2. The building official may issue a single permit for minor alterations to more than one conveyance which do not require individual retesting of each conveyance.

3. No permit shall be required for ordinary repairs, made with parts of the same materials, strength and design normally necessary for maintenance.

4. No permit shall be required for: modifications of cars which do not change the weight or materials (see ASME A17.1, Rules 1202.4b and 1203.2m); connection of alarm to stop switch; securing of car top exit cover; installation of door extension panels; cable guards; switch covers; access ladders or access modification; capacity posting; repairs of lighting fixtures; counterweight and pit guards; photoelectric eye devices and/or repairs to hoistway enclosures. All such installations and/or modifications shall be in conformance with the requirements of this code.

3006.3 Expiration and Renewal of Permits. Section 106.9 of the Seattle Building Code shall apply to permits required by this chapter.

SECTION 3007 — PLANS AND SPECIFICATIONS

Two sets of drawings shall be submitted with applications for installations of new elevators, escalators, dumbwaiters, automobile parking elevators, material lifts and moving walks.

In lieu of complete erection drawings and plans the building official may require details of any portion of an installation. When an installation requires material, fabrication or construction other than recognized standard types, has an offset car frame or is an observation-type elevator installed in other than a fully enclosed hoistway, drawings and details shall be submitted with the application for permit.

SECTION 3008 — REQUIRED INSTALLATION INSPECTIONS

It shall be the duty of the person doing the work authorized by a permit to notify the building official that such work is ready for inspection.

It shall be the duty of the person requesting any inspections required by this code to provide access to and means for proper inspection of such work.

Final inspection shall be called for when the work described on the permit has been completed, and when ready for testing with weights and instruments as may be needed. A final inspection is required after all wiring has been completed and all permanent fixtures such as switches, outlet receptacles, plates, lighting fixtures and all other equipment has been properly installed and the hoistway and machine rooms are properly completed.

SECTION 3009 — CERTIFICATES OF INSPECTION AND OPERATION

3009.1 Certificates Required. It shall be unlawful to operate any elevator, escalator, dumbwaiter, automobile parking elevator, material lift or moving walk without a certificate of inspection issued by the building official. A certificate of inspection shall be issued following an inspection by the building official showing that the conveyance has been found to be in safe operating condition and applicable fees for inspection time, as put forth in the Permit Fee Ordinance, have been paid. The certificate shall remain valid until 45 days after the next inspection or until the certificate is withdrawn, whichever comes first.

> EXCEPTION: The building official may, after inspection of a conveyance under construction, authorize temporary use of the conveyance without issuing a certificate of inspection if the building official determines that temporary operation of the conveyance is reasonably safe. The building official may authorize temporary use for a period not to exceed 60 days to allow completion of the installation and passing of the final inspection.
>
> If, at any time during the period of temporary use, the building official determines that the building owner is not making adequate progress toward obtaining a certificate of inspection, the building official may withdraw the temporary use approval on 7-day notice. The building official may forbid further use of the conveyance until a certificate of inspection is obtained.
>
> Operation of a conveyance without either a valid certificate of inspection or authorization of temporary use shall be a violation of this code, as described in Section 103.

Whenever any conveyance is found to be unsafe or fails to comply with a notice of correction, the building official may withdraw the certificate of inspection.

3009.2 Periodic Inspections. The building official shall cause inspections to be made of every conveyance at intervals of 12 months or as soon thereafter as is practical. The inspector shall file a full and correct report on each conveyance with the building official that shall note any ordinance violations, corrections required and/or the general condition of the conveyance.

3009.3 Inspection Report by Building Official. After each required inspection of a conveyance the building official shall mail a copy of the inspection report to the owner of the conveyance inspected. If inspection shows a conveyance to be in violation of the requirements of this chapter, the building official shall issue a notice in writing listing the corrections to be made to the conveyance which are necessary to bring it into compliance with this chapter and may order the operation thereof discontinued until the corrections are made.

3009.4 Inspections, Tests and Test Reports. Reports of required tests shall be submitted to the owner and to the building official on forms furnished by the building official. Performance of required tests and their cost shall be the responsibility of the owner. Identification of conveyances shall be noted by use of assigned city numbers.

SECTION 3010 — REQUIREMENTS FOR OPERATION AND MAINTENANCE

The owner shall be responsible for the safe operation and maintenance of each device regulated by this chapter. The installation of pipes, ducts, conduits, wiring and the storage of materials not required for the operation of the elevator is prohibited in machine rooms and hoistways. Sidewalk elevators on public places are also subject to the requirements of Title 15, Seattle Municipal Code, Street and Sidewalk Use, as amended. (See also Section 715.)

SECTION 3011 — RETROACTIVE REQUIREMENTS FOR EXISTING INSTALLATIONS

3011.1 General. Existing conveyances shall be made to comply with the State of Washington "Safety Rules Governing Existing Elevators, Dumbwaiters, Escalators, and Moving Walks" (WAC 296- 95) and the provisions of this section.

3011.2 Doors to Elevator and Dumbwaiter Machine Rooms. Elevator and dumbwaiter machine room doors shall be self-closing and self-locking. The lock shall be a spring-type lock arranged to permit the door to be opened from the inside without a key, incapable of being left in the unlocked position, and accessible only by a key from the outside.

3011.3 Key Retainer Box. A key retainer box locked and keyed to the standard City access key for elevator access and operation keys shall be provided. The retainer box shall meet the following standards:

1. Dimensions - eight inches high, six inches wide, one inch deep.
2. Material - sixteen gauge steel welded.
3. Color - red (unless located in the main lobby above the hall call button, six feet nominal above the floor).
4. Labeling - "FOR FIRE DEPARTMENT USE."
5. Lock - Ace one-inch cylinder cam lock key #39504.

The key box is to be installed at the designated recall floor above the Phase I recall switch or in the main lobby above the hall call button when no recall feature exists. The key box is to be mounted six feet nominal above the floor. Other locations may be approved by the building official upon request.

3011.4 Elevator Access Keys. Keys for access to and for the operation of elevator equipment shall be tagged and retained in the key box. They shall be designated "ELEVATOR" and may consist of any or all of the following:

1. Machine room door;
2. Secondary level door;
3. Pit door;
4. Roof door;
5. Independent, hospital emergency and/or attendant operation;
6. Fire emergency service (Phase I and II) (one key for each switch);
7. Hoistway access;
8. Mechanical hoistway access devices (broken arm, lunar, etc.);
9. Miscellaneous switch keys.

3011.5 Dumbwaiter Machinery Access. Access doors to dumbwaiter machinery space shall be provided with electric contacts and labeled on the exterior side "DANGER - DUMBWAITER MACHINE" in one-inch letters.

3011.6 Machine Space Lighting. Lighting of the machine rooms shall comply with ASME A17.1, Rule 101.5a as amended below:

Permanent electric lighting shall be provided in all machine rooms and machinery spaces.

The illumination shall be not less than 10 ftc (108 lux) at the floor level. The lighting control switch shall be located within easy reach of the access to such rooms or spaces. ~~Where practicable t~~ The light control switch shall be located on the lock-jamb side of the access door.

Where practical elevator machinery spaces shall be provided with an electrical outlet.

3011.7 Access to Terminal Landings. Mechanical access to terminal landings of elevator hoistways shall be provided in accordance with ASME A17.1, Rule 111.9(e) or WAC 296-95-162(1).

3011.8 Wall Covering Material for Passenger Cars. Wall covering material for passenger cars shall comply with the following:

1. ASME A17.1, Rule 204.2a, as amended by the following:

1.1 Seattle Building Code regulations concerning flame spread ratings for wall coverings and use of plastics (See Chapters 7 and 8);

1.2 WAC 296-95-216, except that interior finish materials need not be firmly bonded flat to the enclosure and may be padded.

3011.9 Control and Operating Circuits and Overcurrent Protection. Control and operating circuit requirements shall comply with ASME A17.1, Rules 209.3c, 210.9 and 306.9. Overcurrent protection shall be maintained in accordance with Article 620-61, Electrical Code.

3011.10 Roped Hydraulic Elevators. Roped horizontal hydraulic elevators may continue in service but once taken out of service may not be reactivated.

3011.11 Pit Access and Equipment. Access ladders shall be installed in elevator pits deeper than 3 feet.

Pits shall be illuminated in compliance with ASME A17.1, Rule 106.1e, items 1 and 2.

Pit light control switches shall be located inside the hoistway of every elevator approximately 48 inches above the threshold, and either within 18 inches of the access door or within reach from the access floor and adjacent to the pit ladder if provided.

Access shall be provided for safe maintenance and inspection of all equipment located in the pit.

3011.12 Floor Numbers. Elevator hoistways shall have floor numbers, not less than 2 inches in height, placed on the walls and/or doors of hoistways at intervals such that a person in a stalled elevator upon opening the car door could determine the floor position.

3011.13 Car Top Work Light. A permanently wired work light and outlet shall be installed on top of freight and passenger elevators to provide adequate illumination for inspection and work in the hoistway. The light shall be provided with a non-keyed switch in or adjacent to the fixture. The fixture shall be protected from accidental breakage.

3011.14 Labeling. All equipment (disconnect switches, machines and controllers) operating on a voltage in excess of 250 volts shall be labeled for the voltage used in letters 3/4 inches high.

3011.15 Interior Alterations. Alterations or modifications of elevator car interiors shall comply with ASME A17.1, Rule 1202.4b (increases in dead weight of car), Building Code requirements concerning flame spread ratings for wall coverings [See Chapter 8], and lighting requirements of ASME A17.1.

3011.16 Machine Room Enclosures. Machine room enclosures shall comply with ASME A17.1, Rules 101 and 300; and Electrical Code, Article 620. There shall be no storage of miscellaneous items other than those permitted by ASME A17.1, Rule 1206.2b. There shall be no infringement on required elevator clearances.

3011.17 Illumination. Illumination in the elevator car shall be maintained unless it is turned off manually by the switch in the car. A readily-accessible and labeled toggle-type test switch shall be provided on the top of the car to cut lighting power manually and test the emergency lighting.

3011.18 Conveyance Number Designation. In any building with more than one elevator, escalator or other type of conveyance a designating number (not less than two inches in height) shall be located at the door of the main entrance lobby, inside the car, on the machine, on the disconnect switch or stop switch, and on escalator upper and lower front plates.

3011.19 Escalator Starting Switches. "Up" and "Down" positions shall be clearly indicated on all starting switches.

3011.20 Anchorage for Elevator Equipment. All elevator equipment, hydraulic or cable type shall be anchored.

3011.21 Restricted Opening of Doors. All existing passenger elevators in Group R, Division 1 hotels and dormitory buildings shall comply with the requirements of ASME A17.1, Rule 111.12.

SECTION 3012 — RETROACTIVE REQUIREMENTS FOR EXISTING MATERIAL LIFTS

3012.1 General. Existing material lifts shall be made to comply with the following requirements. (Note: New material lifts shall comply with Section 3013).

3012.2 Hoistway Enclosure Gates and Doors. The openings at each material lift landing must have gates or doors that guard the full width of the opening. A hoistway door shall be vertically sliding, bi-parting, counter-balanced, or horizontally swinging or sliding. Gates and doors must meet the following requirements:

1. A balanced-type, vertically sliding hoistway gate shall extend from not more than two inches from the landing threshold to not less than sixty-six inches above the landing threshold.

2. A gate shall be solid or openwork of a design that will reject a ball two inches in diameter. A gate shall be located so that the distance from the hoistway face of the gate to the hoistway edge of the landing sill is not more than two and one-half inches. A gate shall be designed and guided so that it will withstand a lateral pressure of one hundred pounds applied at approximately its center without breaking or being permanently deformed and without displacing the gate from its guides or tracks.

3. Hoistway gates or doors shall have a combination mechanical lock and electric contact, which shall prevent operation of the material lift by the normal operating devices unless the door or gate is closed.

3012.3 Controls.

1. The control station shall be remotely mounted so that it is inaccessible from the material lift car.

2. Controls shall be clearly marked or labeled to indicate the function of control.

3. All control stations shall have a stop switch. When opened, the stop switch shall remove the electrical power from the driving machine and brake. The stop switch shall:

3.1 Be manually operated;

3.2 Have red operating handles or buttons;

3.3 Be conspicuously and permanently marked "STOP";

3.4 Indicate the stop and run positions; and

3.5 Be arranged to be locked in the open position.

3012.4 Capacity Posting and No-Riders Sign.

Each material lift shall have a capacity sign permanently and securely fastened in place in the material lift car and on the landings. The sign shall indicate the rated load of the material lift in pounds. The sign shall be metal with black letters two inches high on yellow background.

A sign stating "NO PERSONS PERMITTED TO RIDE THIS DEVICE" shall be conspicuously and securely posted on the landing side of all hoistway gates and doors and in the enclosure of each material lift car. The sign shall be metal with black letters two inches high on red background.

SECTION 3013 — REQUIREMENTS FOR NEW MATERIAL LIFTS.

New material lifts shall comply with ASME A17.1, Sections 101 and 102, Rules 300.2 and 300.2a and the requirements of WAC 296-93.

SECTION 3014 — EMERGENCY SERVICE FOR ELEVATORS IN EXISTING BUILDINGS - PHASE I RECALL.

3014.1 General. All existing elevators requiring Phase I recall when installed or under Article 93 of the Seattle Fire Code shall comply with this section.

EXCEPTIONS: 1. Elevators which comply with the standards for new installations as provided in Section 3018;

2. Elevators with less than 25 feet of travel when the building official and the fire chief give written approval; and

3. Elevators which comply with ASME A17.1, Rule 211.3a 1984 edition or later and Sections 3014.10 and 3014.11.

3014.2 Phase I Recall Keyed Switch. A three-position ("on", "off" and "by-pass") key cylinder switch shall be provided at each designated level within easy line of sight of the elevator controlled by the switch. Where additional switches are provided in a central control station they shall be two position ("off" and "on") key-operated switches.

3014.3 Keyed Cylinder-Type Switches. Keyed cylinder-type switches shall comply with the following:

1. Keys shall be removable only in the emergency ("on") and normal ("off") positions. Keys shall not be removable in the by-pass position.

2. One key shall be provided for each Phase I switch or key cylinder.

3. All emergency operation cylinders (Phases I and II) shall be keyed alike but such key shall not be a part of a building master key system.

3014.4 Key Location.

1. A key box meeting the standards of Section 3011.3 shall be provided at the designated recall floor above the Phase I recall switch. The key box is to be mounted approximately six feet above the floor. Other locations may be approved upon request.

2. When a central control station is provided, an additional set of keys shall be provided and hung in the control station in a location designated by the Fire Department. The keys shall be identified by a ring or paddle.

3014.5 Key Switch Functions.

1. The three positions of the switch shall be marked "by-pass", "off" and "on".

2. When the switch is in the "off" position, normal elevator service shall be provided and smoke detectors, where required, shall be functional.

3. When the switch is in the "by-pass" position, normal elevator service shall be restored independent of any required smoke detectors.

4. When the switch is in the "on" position, the elevators are in Phase I elevator recall mode.

3014.6 Phase I Automatic Recall Operation. When the Phase I recall switch is in the emergency ("on") position:

1. All cars controlled by this switch which are on automatic service shall return nonstop to the designated level and power-operated doors shall open and remain open.

2. A car traveling away from the designated level shall reverse at or before the next available floor without opening its doors.

3. A car stopped at a landing shall have the in-car emergency stop switch or in-car stop switch rendered inoperative as soon as the doors are closed and the car starts toward the designated level. A moving car, traveling to or away from the designated level, shall have the in-car emergency stop or in-car stop switch rendered inoperative immediately.

4. A car standing at a floor other than the designated level, with doors open and in-car emergency stop switch or in-car stop switch in the run position, shall conform to the following:

4.1 Elevators having automatic power-operated horizontally sliding doors shall close the doors without delay and proceed to the designated level;

4.2 Elevators having power-operated vertically sliding doors provided with automatic or momentary pressure closing operation in accordance with ASME A17.1, Rule 112.3d shall have the closing sequence initiated without delay in accordance with ASME A17.1, Rule 112.3d (1), (2), (3) and (5) and the car shall proceed to the designated level;

4.3 Elevators having power-operated doors provided with continuous pressure closing operation per ASME A17.1, Rule 112.3b or elevators having manual doors shall conform to the requirements of Section 3014.7. Sequence operation, if provided, shall remain effective.

5. Door reopening devices for power-operated doors which are sensitive to smoke or flame shall be rendered inoperative. Mechanically actuated door reopening devices not sensitive to smoke or flame shall remain operative. Car door open buttons shall remain operative. Door closing shall conform to the requirements of ASME A17.1, Rule 112.5. Door hold open switches shall be rendered inoperative.

6. All car and corridor call buttons and all corridor door opening and closing buttons shall be rendered inoperative. All call register lights and directional lanterns shall be extinguished and remain inoperative. Position indicators, when provided, shall remain in service. All prior registered calls shall be canceled.

7. The activation of a smoke detector installed in accordance with Article 93 of the Seattle Fire Code in any elevator lobby or associated elevator machine room, other than the designated level, shall cause all cars in all groups that serve that lobby to return nonstop to the designated level. The fire chief may approve the connection of other detection devices to activate recall. The operation shall conform to the requirements of Phase I emergency recall operation. Whenever new elevator controllers are installed, they shall meet all provisions of the then current building and elevator codes. Newly-installed controllers shall have the capability of selecting alternate recall floors.

3014.7 Attendant-Operated Recall Operation. Attendant-operated elevators shall be provided with visible and audible signals which alert the operator to return to the lobby when the car has been recalled under Phase I control.

3014.8 Dual Recall Operation. Elevators arranged for dual operation shall conform to all requirements for automatic operation and attendant operation as applicable.

3014.9 Inspection/Maintenance Recall Operation. During inspection operation the audible and visible signals required in Section 3014.7 will be actuated when the car has been recalled under Phase I control. The car shall remain under the control of the operator and/or car top station until the car is returned to service.

3014.10 Nurses' Preemption. Nurses' preemption (hospital service) may be allowed to commandeer up to one-half of the cars in a particular bank of elevators. At least one-half of the cars shall respond to Phase I and all cars not preempted shall respond.

3014.11 Operation Instruction. Operation instructions shall be available in accordance with ASME A17.1, Rule 211.7. In addition, Phase I operating instructions shall be adjacent to the Phase I switch in the fire control center and other approved locations.

3014.12 Latching. All cars responding to Phase I Recall, activated by a smoke detector or other approved detection device, shall return to the appropriate recall floor as determined by the first detector recall signal received. No device, other than the Phase I switch (Rule 211.3a), may override the first recall signal received. A later detection signal shall not change the recall floor. Smoke detector activation shall only be reset manually.

SECTION 3015 — EMERGENCY SERVICE FOR ELEVATORS IN EXISTING BUILDINGS - PHASE II HIGH RISE IN-CAR OPERATION

3015.1 General. Existing elevators in buildings having floors used for human occupancy located more than 75 feet above the lowest level of fire department vehicle access, or buildings having floors used for human occupancy 35 feet above grade, which lack fire department vehicle access to at least one side shall have Phase II in-car operation and shall comply with this section.

EXCEPTIONS: 1. Elevators which comply with the standards for new installations as provided in Section 3019;

2. Elevators with less than 25 feet of travel when the building official and fire chief give written approval; and

3. Elevators which comply with ASME A17.1, Rule 211.3c.

3015.2 Phase II In-Car Operation Key Switch.

1. A two-position ("off" and "on") key cylinder switch shall be provided in each elevator car.

2. The switch shall become effective only when the designated level Phase I switch is in the "on" position or a smoke detector has been activated and the car has returned to the designated level. The "on" position shall place the elevator in Phase II in-car operation.

3. The elevator shall be removed from Phase II operation only by moving the switch to the "off" position with the car at the designated level.

4. The switch shall be operable by the Phase I key and such key shall not be part of a building's master key system.

5. The key shall be removable only in the "off" position.

6. One key shall be provided for each Phase II switch or key cylinder.

3015.3 Key Location. See Section 3014.4 for the location of the keys.

3015.4 Designated Operator. The operation of elevators on Phase II emergency in-car operation shall be by trained emergency service personnel only.

3015.5 Car Operation Only. An elevator shall be operable only by a person in the car.

3015.6 Corridor Call Buttons and Directional Lanterns. All corridor call buttons and directional lanterns shall remain inoperative.

3015.7 Car and Hoistway Door Operation. The operation of car and hoistway doors shall comply with the following:

1. The opening of power-operated doors shall be controlled only by constant-pressure open buttons or switches.

2. If the constant-pressure open button or switch is released prior to the doors reaching the fully open position, the doors shall automatically reclose. Once doors are fully open, they shall remain open until signaled to close.

3. The closing of power-operated doors shall be by constant pressure of either the call button or door-close button. If a door-close button is supplied, it shall be operable.

4. If the constant-pressure close button or car call button is released prior to the doors reaching the fully closed position, the doors shall automatically reopen. Once doors are fully closed, they shall remain closed until signaled to open.

EXCEPTION: Momentary pressure control of doors using the sill trip-type operator may be permitted as existing; however, the doors must not open automatically upon arrival at a floor.

3015.8 Door Reopening Devices. Smoke-sensitive door reopening devices and door hold-open switches shall be rendered inoperative. Non-smoke-sensitive door reopening devices required to be operative under all other conditions may be rendered inoperative under Phase II in-car operation only if the doors are closed by constant pressure.

3015.9 Car Call Cancellation. All registered calls shall cancel at the first stop.

3015.10 Direction of Travel. Direction of travel and start shall be by the car call buttons. With doors in the closed position, actuation of the car call button shall select the floor, and start the car to the selected floor. If no door-close button is available, constant pressure of the car call button shall select the floor, close the door, and start the car to the selected floor.

EXCEPTION: On proximity-type car call buttons or any other type subject to false firing (calls being placed by line spikes, intermittent loss of power, etc.), the doors must be closed by a door-close button. Floors may be selected either before or after closing of the doors. The car will start only on the call button or door close button depending on which is the last device to be actuated.

3015.11 Motor Generator Time Out. The motor generator shall not time out automatically.

3015.12 Car Position Indicators. The car position indicators, when provided, shall be operative.

3015.13 Phase II Priority. Phase II operation shall override any floor calls keyed out for security reasons. Floor selection buttons shall be provided in the car to permit travel to all floors served by the car. Means which prevent the operation of these buttons shall be rendered inoperative.

3015.14 False Starts. The elevator shall not start with no calls registered.

3015.15 Terminal Runs. The elevator shall not make unprogrammed terminal runs.

3015.16 Loss of Power. Elevators on fire emergency Phase II car operation shall remain in their respective locations and in Phase II mode upon loss of power. They shall not move unless the elevator is under the control of the operator and power has been restored.

SECTION 3016 — NEW INSTALLATIONS - CONSTRUCTION STANDARDS

3016.1 General. All new elevators, escalators, moving walks and dumbwaiters and their installation shall conform to the requirements of ASME A17.1 as amended in this section and to the specific requirements of Sections 3017, 3018 and 3019. For elevator shaft requirements, see Table No. 6-A. Material lifts shall conform to the requirements contained in Chapter 296-93 of the Washington Administrative Code.

3016.2 Wall Covering Material for Passenger Cars. Wall covering material for passenger cars shall comply with the following:

1. ASME A17.1, Section 204.

2. Seattle Building Code requirements concerning flame spread ratings for wall coverings and use of plastics (See Chapters 7 and 8).

3. WAC 296-95-216, except that interior finish materials need not be firmly bonded flat to the enclosure and may be padded.

3016.3 Working Clearances. Working clearances shall conform to the following. The minimum clear space working clearances shall be 18 inches on two sides and between units of controllers, selectors and/or walls or other building obstructions. The minimum clear space in front of controllers shall be 48 inches. The minimum clear space at the rear of controllers with back-wiring, terminals or other elements requiring access shall be 36 inches. Such clearance shall be free of pipes, vents, storage, ducts or any other obstruction. The 18 inch side clearance may be combined to permit 36 inches clear on one side only.

3016.4 Seismic Considerations. All requirements of ASME A17.1, Part 24 are superseded by the following:

The anchorage of the elevator drive and suspension systems shall be designed in accordance with Section 1630 for a lateral force based upon a Cp value of 1.25 unless data substantiating a lesser value is furnished. Stress values may be increased 1/3 in accordance with Section 1603.5. Calculation of loads shall be applied to produce maximum stress. Elevator drive and suspension systems requiring seismic anchorage shall include:

1. **Cabled Elevators**

   1.1 Machine room equipment.

   1.2 Counterweight system.

1.2.1 Weights and rails.

1.2.2 Deflection and compensation sheaves.

1.3 Car sling and rails system.

2. **Hydraulic Elevators**

2.1 Machine room equipment.

2.2 Hydraulic lines of hydraulic elevators shall not cross building seismic joints.

2.3 Hydraulic elevators shall have a safety valve in accordance with ASME A17.1-1993, Rule 2410.6.

3016.5 Requirements to Accommodate People with Disabilities. All new elevators shall comply with Washington State Building Code Chapter 11, 51-20-3100 Washington Administrative Code. In addition, WAC 296-81-300 through 365 shall apply.

3016.6 Hoistway Smoke Control. Requirements of ASME A17.1, Rule 100.4 are superseded by the following:

1. Hoistways of elevators shall be provided with means to prevent the accumulation of smoke and hot gases in case of fire.

2. When an elevator hoistway is pressurized and emergency power is provided for the pressurization equipment under the provisions of Section 711 or 905, hoistway venting will not be required.

3. Pressurization.

3.1 When pressurization is installed in elevator shafts, the pressurization of the shaft shall be measured with all elevator systems in recall mode, Phase I, and all cars at the designated recall level with the doors in the open position.

3.2 Activation of pressurization may be delayed 30 seconds to allow elevator doors to close.

4. Unless specifically installed to serve that space only, environmental air systems and pressurization systems shall not be located in hoistways, elevator mechanical rooms and elevator machinery spaces.

EXCEPTIONS: 1. Pressurization ducts serving a hoistway which are separated from the room or space by construction equal to the rated construction of the room or space and so located that all required clearances are maintained.

2. Pressurization duct openings, dampers and grilles may be located in hoistway shaft walls provided the pressurization air does not impair the operation of the elevator.

5. Hoistways shall not be pressurized through pressurization of elevator machine rooms. The machine room floor between the hoistway and overhead machine room shall contain as few penetrations as possible. All penetrations for cable drops, etc., shall be held to a minimum size.

6. Elevator doors must operate properly when hoistway pressurization is in effect.

7. Ventilation louver operating motors shall not infringe on any elevator machinery or controller working clearances.

8. Hoistways shall be vented in accordance with the following:

8.1 Hoistways of elevators with more than 25 feet of travel from lowest floor level to highest floor level shall be provided with means for venting smoke and hot gases to the outer air in case fire or smoke is detected in the building.

EXCEPTION: Pressurized hoistways may be unvented.

8.2 Vents, if used, shall be located in the side of the hoistway enclosure directly below the machinery room floor or ceiling at the top of the hoistway, and shall open directly to the outer air or through noncombustible ducts to the outer air. Ducts must have the same rating as is required for the hoistway they are venting.

8.3 The area of the vents shall not be less than three and one-half percent of the area of the hoistway nor less than three square feet for each elevator car, whichever is greater. The required area of the vent is to be free area, unobstructed by louvers, etc.

8.4 Hoistway vents shall have dampers of the normally-open type (open with power off) which are normally in the closed position in the absence of fire alarm or power failure.

3016.7 Elevator Operation on Emergency Power. All elevators operating on emergency or standby power, when supplied, shall comply with the following:

1. Each elevator shall be transferable to the emergency supply when the emergency supply is designed with the capacity to accommodate the elevators.

2. Emergency power supply systems capable of handling all elevators on the premises need no sequencing or switching other than the possibility of staggering the restarting of the generators.

3. Emergency power supply systems whose capacity can only handle one elevator of a duplex or one elevator in each group of elevators shall comply with the following. (For the purposes of this section, group is defined as all elevators serving the same portions of a building: highrise, midrise, lowrise, etc.)

3.1 All elevators on automatic operation shall be automatically assigned emergency power in sequence and returned to the Phase I recall or lobby floor, where they shall open their doors and then time out of service.

3.2 The last car down will generally be the selected car of a duplex or a group to remain in service. The service shall continue to be automatic.

3.3 The assignment of emergency power will skip or rotate past cars which may be out of service (emergency stop switch pulled, malfunction, car top operation, etc.). If assignment is made to a manual or attendant-operated car and the car is unattended, the system shall rotate past the car as though it is out of service.

4. The car and elevator machine room lights shall be activated on the emergency system.

5. A manual emergency power assignment switch or switches shall be in an elevator status panel located in the fire department central control station. Each elevator shall be capable of being assigned emergency power from this location. The manual switching shall be effective at all times other than when the cars are automatically sequencing to the lobby or when the selected car is traveling. The switch shall not remove power in midflight or with doors closed.

6. Elevators on Phase II car operation shall remain in their respective locations upon loss of power. They shall remain in Phase II mode and shall not move unless the elevator is under the control of the operator and normal power has been restored or emergency power has been assigned to the car by either automatic or manual means.

7. Loss of power and initiation of emergency power immediately after Phase I recall operation has occurred shall not cause any cars to be stranded in the building. Upon the application of emergency power to the equipment, the cars shall follow the normal sequencing to the lobby, open their doors and time out of service. When all cars have been bypassed (out of service) or returned to the lobby, the assigned car shall then become available for firefighter's use on Phase II in-car operation.

8. Each elevator operating on emergency power shall be tested in accordance with applicable ASME A17.1-1993, Rules 207.8 and 210.10, and ASME A17.2-1985, Division 118. Note: Rule 207.8 and Division 118 require the tests to be performed with 125 percent of rated load.

9. If the elevator cars are recalled to the alternate floor by Phase I recall and a loss of power occurs, the cars shall be sequenced to the alternate floor upon assignment of standby or emergency power. The cars shall not go to the primary designated recall floor under these conditions.

10. The elevator position indicator system when provided shall not become disoriented due to the loss of power or any other reason, however, upon the resumption of power, the car may move to reestablish absolute car position.

11. Communications to the car shall remain in service.

3016.8 Multiple Hoistways. The number of elevators permissible in a hoistway shall be in accordance with this subsection. The requirements of ASME A17.1, Rule 100.1d are superseded by the following:

1. No more than four elevators may be in a single hoistway.

2. No more than three elevators serving all or the same portion of a building may be in a single hoistway.

   EXCEPTION: Four elevators serving all or the same portions of a building may be in a common hoistway under the following conditions:

   1 The hoistway is pressurized; and

   2 Standby generator power is available to serve both the elevators and pressurization equipment.

3016.9 Additional Doors. Doors other than the hoistway door and the elevator car door shall be prohibited at the point of access to an elevator car.

EXCEPTION: Doors which are readily openable from the car side without a key, tool, or special knowledge or effort.

3016.10 Key Retainer Box. A key retainer box locked and keyed to the standard city access key for elevator access and operation keys shall be provided. The retainer box shall meet the following standards:

1. Dimensions - eight inches high, six inches wide, one inch deep.

2. Material - sixteen gauge steel welded.

3. Color - red (unless located in the main lobby above the hall call button, six feet above the floor).

4. Labeling - "FOR FIRE DEPARTMENT USE."

5. Lock - Ace one-inch cylinder cam lock key #39504.

The key box is to be installed at the designated recall floor above the Phase I recall switch or in the main lobby above the hall call button when no recall feature exists. The key box is to be mounted approximately six feet above the floor. Other locations may be approved by the building official upon request.

3016.11 Elevator Access Keys. Keys for access to and for the operation of elevator equipment shall be tagged and retained in the key box. They shall be designated "ELEVATOR" and may consist of any or all of the following:

1. Machine room door;

2. Secondary level door;

3. Pit door;

4. Roof door;

5. Independent, hospital emergency and/or attendant operation;

6. Fire emergency service (Phase I and II) (one key for each switch);

7. Hoistway access;

8. Mechanical hoistway access devices (broken arm, lunar, etc.);

9. Miscellaneous switch keys.

3016.12 Access to Elevator Hoistways from Terminal Landings. Mechanical access at terminal landings to elevator hoistways shall be provided in accordance with ASME A17.1, Rule 111.9e and WAC 296-95-162(1).

3016.13 Escalators.

3016.13.1 Starting Switches. All escalators shall comply with ASME A17.1, Rule 805.1a Starting Switch as amended below.

Rule 805.1a Starting Switch.

Starting switches shall be of the key-operated type and shall be located so that the escalator steps are within sight. Automatic starting by any means is prohibited. "Up" and "Down" positions shall be clearly indicated on all starting switches.

3016.13.2 Escalator Conveyance Number Designation. In any building with more than one escalator, a designating number (not less than two inches in height) shall be located on the upper and lower front plates.

3016.14 Keys for Wheelchair Lifts. Inclined stairway chairlifts and inclined and vertical wheelchair lifts installed only for use by persons with disabilities in locations other than in or at a private residence shall be provided with a standard electric switch Chicago lock with key #2252.

3016.15 Machinery Rooms for Private Residence Elevators. Machinery Rooms for private residence elevators shall comply with ASME A17.1, Sections 101 and 102, and Rules 300.2 and 300.2a.

SECTION 3017 — NEW INSTALLATIONS - GENERAL EMERGENCY OPERATION REQUIREMENTS

3017.1 General. All elevators shall conform to the requirements of this section and the specific requirements of Sections 3018 and 3019.

3017.2 Central Control Stations. The following criteria shall be met where buildings provide a central control station in accordance with Section 403:

1. An additional two-position ("off" and "on") Phase I recall switch for each elevator or group as defined by Section 3018 shall be installed when the control station is not within easy line of sight of the lobby Phase I recall switches; the switch(es) shall be rotated clockwise to go from "off" to "on" position;

2. A car position indicator which shall be of a positive type that will not lose the car position nor need resetting on loss of power; however, upon the resumption of power, the car may move to reestablish absolute car position.

3. A telephone connection switch to elevator phones or a firefighter's phone jack connected to the fire control center;

4. A manual emergency power assignment switch;

5. A Phase I indicator;

6. A Phase II indicator.

3017.3 Nurses' Preemption. Nurses' preemption (hospital service) may be allowed to commandeer up to one-half of the cars in a particular bank of elevators. At least one-half of the cars shall respond to Phase I and all cars not preempted shall respond.

3017.4 Phase I and II Operation Instructions. Operation instructions shall be available in accordance with ASME A17.1, Rule 211.7. In addition, Phase I operating instructions shall be adjacent to the Phase I switch in the fire control center and other approved locations.

SECTION 3018 — NEW INSTALLATIONS - PHASE I RECALL OPERATION REQUIREMENTS

3018.1 Rule 211.3 - General. Elevators requiring Phase I recall emergency operation shall comply with ASME A17.1 Rule 211.3, Firefighters' Service - Automatic Elevators, as amended below.

Rule 211.3 Firefighters' Service - Automatic Elevators

~~All automatic (non-designated attendant) elevators shall conform to the requirements of this Rule.~~

Phase I emergency recall operation shall be provided for all elevators with fully automatic open and close power-operated doors.

3018.2 Rule 211.3a Phase I Emergency Recall Operation. Elevators requiring Phase I recall emergency operation shall comply with ASME A17.1 Rule 211.3a, Phase I Emergency Recall, and the following:

Groups of elevators containing four or more cars shall be provided with two, three-position key switches per group. A group shall be defined for the purpose of this section as all elevators serving the same portion of a building. Two-position ("off" and "on") switches may be provided in the fire control center where Chapter 4 of this code requires such a center. The switch(es) shall be rotated clockwise to go from "off" to "on" position. Hall call buttons common to a group will remain in service unless both Phase I recall switches of a four-car or larger group are placed in the recall mode, or a fire alarm recall signal is initiated.

3018.3 Rule 211.3b Smoke Detectors. Elevators requiring Phase I recall emergency operation shall comply with ASME A17.1 Rule 211.3b, Smoke Detectors, except that the fire chief may approve other detection devices in lieu of or in addition to smoke detectors. Such other detection devices may initiate Phase I operation.

SECTION 3019 — NEW INSTALLATIONS - PHASE II IN-CAR OPERATION REQUIREMENTS (ASME A17.1, RULE 211.8)

Elevators requiring Phase II in-car operation shall comply with ASME A17.1, Rule 211.8 Switch Keys, as amended below.

211.8 Switch Keys. The switches required by Rules 211.2 through 211.5, for all elevators in a building, shall be operable by the same key. This key shall only be made available to authorized personnel. This key shall not operate any other switch and shall not be part of a building master key system. There shall be a key for the designated level switch and for each elevator in the group. These keys shall be kept ~~on the premises in a location readily accessible to authorized personnel, but no where they are available to the public~~ in the key retainer box as required by Section 3011 or Section 3016.

SECTION 3020 NEW INSTALLATION - FIRE-RESISTIVE CONSTRUCTION (ASME A17.1, RULE 100.1A)

All new elevator hoistways and machine rooms shall comply with ASME A17.1, Rule 100.1a, Fire-Resistive Construction and the following:

The fire-resistive rating of the hoistway shall be provided for all penetrations for fixture boxes, etc. Fixture boxes or other devices requiring servicing from the hoistway side shall have an access cover with a rating equivalent to that of the hoistway. All other fixture boxes or devices shall be grouted over to a thickness which maintains the rating of the hoistway.

SECTION 3021 - NEW INSTALLATIONS - CONSTRUCTION OF FLOORS (ASME 17.1, RULE 100.3D)

All new elevator hoistways and machine rooms shall comply with ASME A17.1, Rule 100.3d, Construction of Floor, as amended below.

Rule 100.3d Construction of Floors. Floors may be of ~~concrete, or may be of metal construction with or without perforations. Metal floors shall conform to the following.~~ materials permitted by the building code.

~~(1) If of bar-type grating, the openings between bars shall reject a ball 3/4 in. (19 mm) in diameter.~~

~~(2) If of perforated sheet metal or of fabricated openwork construction, the openings shall reject a ball 1 in. (25 mm) in diameter.~~

SECTION 3022 — INSTALLATION OF PIPES OR DUCTS CONVEYING GASES, VAPORS OR LIQUIDS IN HOISTWAYS, MACHINE ROOMS OR MACHINERY SPACES (ASME A17.1, RULE 102.2)

3022.1 Prohibited Wiring, Pipes and Ducts. In accordance with ASME A17.1, Rule 102, non-elevator electric wiring, pipes and ducts shall be prohibited in elevator machine rooms and hoistways except as otherwise provided in this section. The use of false ceilings and furring does not remove such items from the elevator spaces and shall not be acceptable. See also Section 715.

3022.2 All elevator hoistways and machine rooms shall comply with ASME A17.1, Rule 102.2, Installation of Pipes or Ducts Conveying Gases, Vapors or Liquids in Hoistways, Machine Rooms or Machinery Spaces, as amended below:

Rule 102.2 Installation of Pipes or Ducts Conveying Gases, Vapors or Liquids in Hoistways, Machine Rooms, or Machinery Spaces

(a) ~~Steam and hot water p~~ Pipes conveying gases, vapors or liquids are not permitted to be installed in hoistways, machine rooms, and machinery spaces. ~~for the purpose of heating these areas only, subject to the following~~.

~~(1) Heating pipes shall convey only low pressure steam [5 psi or less (34 kPa)] or hot water [212° F (100° C) or less].~~

~~(2) All risers and return pipes shall be located outside the hoistway.~~

~~(3) Traps and shutoff valves shall be provided in accessible locations outside the hoistway.~~

(b) Only ducts for heating, cooling, ventilating, and venting these spaces are permitted to be installed in the hoistway, machine room, and machinery space.

Ducts may pass through an elevator machine room or machinery space provided they are separated from the room or space by construction equal to the rated construction of the room or space and so located that all required clearances are maintained.

If the machine room is vented directly to the outside of the building, the vent shall be enclosed within one-hour fire-resistive construction, or as required for shafts where it passes through occupied floors.

(c) Standard sprinkler protection conforming to the requirements of ANSI/NFPA 13 may be installed in these spaces, subject to ~~the following~~ rules promulgated by the building official.

~~(1) All risers and returns shall be located outside these spaces.~~

~~(2) Branch lines in the hoistway shall supply sprinklers at not more than one floor level.~~

~~(3) Means shall be provided to automatically disconnect the main line power supply to the affected elevator prior to the application of water. This means shall not be self-resetting. The activation of sprinklers outside of the hoistway or machine room shall not disconnect the main line power supply.~~

~~(4) Smoke detectors shall not be used to activate sprinklers in these spaces or to disconnect the main line power supply.~~

(d) Other pipes or ducts conveying gases, vapors, or liquid and not used in connection with the operation of the elevator shall not be installed in any hoistway, machine room, or machinery space.

SECTION 3023 — ACCESS TO PITS (ASME A17.1, RULE 106.1D)

All pits shall comply with ASME A17.1 as amended below:

Rule 106.1d Access to Pits. Safe and convenient access shall be provided to all pits, and shall conform to the following.

(1) Access shall be by means of the lowest hoistway door or by means of a separate pit access door.

(2) There shall be installed in the pit of each elevator where the pit extends more than 3 ft (914 mm) below the sill of the pit access door, a fixed vertical ladder of noncombustible material, located within reach of the access door unlocking device. The ladder shall extend not less than 42 in. (1067 mm) above the sill of the access door, or handgrips shall be provided to the same height. Access ladder width shall be at least 12 inches. Access ladders shall provide not less than 4 inches of clearance from the supporting surface.

(3) Pits shall be accessible only to authorized persons.

(4) Where a separate pit access door is provided, it shall be self-closing and provided with a spring-type lock arranged to permit the door to be opened from inside the pit without a key. Such doors shall be kept locked.

(a) If the door swings into the pit, it shall be located so that it does not interfere with moving equipment.

(b) The door shall have a minimum width of 30 in. (762 mm) and a minimum height of 80 in. (2032 mm) ~~6 ft. (1829 mm)~~.

(c) Keys to unlock the pit access door [Rule 106.1d(4)] shall be kept on the premises in a location readily accessible to authorized personnel, but not where they are accessible to the general public. The keys may be the same as those used for the machine room access door. (Rule 101.3d).

(5) Separate pit access doors shall not be located where a person standing in the doorway can be struck by any part of the car or counterweight when either is on its fully compressed buffer.

(6) Permanent noncombustible platforms for safe access and maintenance to the underside of elevator cars shall be provided where pit depths exceed 8 feet as approved by the building official.

SECTION 3024 — NO REQUIREMENTS.

SECTION 3025 —MACHINE ROOMS AND MACHINERY SPACES

3025.1 Electric Elevators. Machine rooms and machinery spaces for electric elevators shall comply with ASME A17.1, Rule 101.1b Non-Fire-Resistive Construction, as amended below:

Rule 101.1b Non-Fire-Resistive Construction

(1) Where fire-resistive construction is not required by Rule 101.1a(1), machine rooms and machinery spaces shall conform to the requirements of Rules 101.1b(2) and (3).

(2) The machine room or machinery space shall be enclosed with ~~noncombustible material extending to a height of not less than 6 ft (1829 mm)~~ solid walls.

(3) Machines, control equipment, sheaves, and other machinery shall not be exposed to the weather.

3025.2 Hydraulic Elevators. All machine rooms and machinery spaces for hydraulic elevators shall comply with ASME A17.1, Rule 300.2, Machine Rooms and Machinery Spaces, as amended below:

Rule 300.2 Machine Rooms and Machinery Spaces

Machine rooms and machinery spaces for hydraulic elevators shall conform with Section 3025.1 and ~~to~~ the requirements of Rules 101.1 through 101.7, except for Rule 101.6.

300.2a Location of Machine Rooms. Hydraulic elevator machine and control rooms may be located overhead, adjacent to, underneath the hoistway, or at a remote location. They shall not be located in the hoistway.

Where pumps, motors, valves, and electrical control equipment are located in spaces separated from the hoistway enclosure (Rule 100.1), such spaces shall be separated from other parts of the building by enclosures conforming to the requirements of Rule 101.1b ~~(2) and (3) and having an access door conforming to the requirements of Rule 101.3d~~ as amended in Section 3025.1.

SECTION 3026 — SUPPLY LINE SHUTOFF VALVE (ASME A17.1, RULE 303.4A)

All hydraulic elevators shall comply with ASME A17.1, Rule 303.4a, Supply Line Shutoff Valve, as amended below:

Rule 303.4a Supply Line Shutoff Valve A manual shutoff valve shall be installed in the supply line to the cylinder of every hydraulic elevator ~~where the cylinder is not exposed to inspection~~. The shutoff valve shall be located in the pit or the machine room.

SECTION 3027 — GUARDS AT CEILING INTERSECTION (ASME A17.1, RULE 802.3G)

All escalators shall comply with ASME A17.1, Rule 802.3g, Guard at Ceiling Intersection, WAC 296-95-410, and the following:

Guards shall be provided at any pinching, snagging or wedging points between the handrail, balustrade and adjacent building components or equipment when such points are within the clearances delineated in Rule 802.3g.

SECTION 3028 —TEST REPORTS

When tests are required by ASME 17.1, Part X, as amended in this code, immediately after tests are completed all test results shall be submitted to the building official for approval on forms furnished by the building official. The submitted results shall be completed and signed by the person performing the tests and shall identify the testing firm. Copies of the completed forms shall be provided to the owner.

SECTION 3029 — ROUTINE AND ACCEPTANCE INSPECTION AND TESTS

3029.1 Acceptance Inspection and Tests. Inspections and tests shall comply with ASME A17.1, Rule 1000.1c, Acceptance Inspection and Tests, as amended below:

Rule 1000.1c Acceptance Inspection and Tests

(1) The acceptance inspection shall be made by an inspector employed by the building official ~~authority having jurisdiction, except as specified in Rule 1000.1c(3)~~.

(2) The person installing or altering the equipment shall perform all of the tests required by Sections 1003, 1006, 1009, and 1010 of ASME A17.1 in the presence of an inspector employed by the building official ~~authority having jurisdiction, except as specified in Rule 1000.1c(3)~~.

(3) ~~The authority having jurisdiction may authorize a qualified person to make the inspection and witness the tests on its behalf. Immediately after the inspection and tests, the inspector shall submit to the authority having jurisdiction a statement certifying that the inspection and test have been performed and a report on the results thereof.~~

3029.2 Routine Inspection and Tests. Routine inspection and tests required by ASME A17.1 Rules 1001 (electric elevators), 1004 (hydraulic elevators), 1007 (escalators and moving walks) and Section 1010 (other equipment) shall be performed at intervals of approximately 1 year as part of the periodic inspection and tests of those conveyances.

EXCEPTION: Routine Inspection and Tests are not required for Private Residence Elevators and Lifts.

SECTION 3030 — SAFETY INSPECTION AND TEST REQUIREMENTS (ASME A17.1, RULES 1002.2B AND 1002.3)

3030.1 ASME A17.1, Rule 1002.3. Elevators shall be subject to five-year inspection test requirements in accordance with ASME A17.1, Rule 1002.3, 5-Year Inspection Test Requirements, except that safety and governor systems of cars operating on wood guide rails shall be tested by tripping the governor by hand with rated load in the car, and the car at rest.

3030.2 ASME A17.1, Rule 1002.2b. The tests required by ASME A17.1, Rule 1002.2 shall be performed at five-year intervals. The tests required by ASME A17.1, Rule 1002.2 paragraphs 2a, 2b, 2c and 2d shall be performed with rated load in the car.

SECTION 3031 — PERIODIC INSPECTION AND TESTS OF PASSENGER AND FREIGHT HYDRAULIC ELEVATORS (ASME A17.1, RULE 1005.1)

Hydraulic elevator inspection and test periods shall be in accordance with ASME A17.1, Rule 1005.1, Inspection and Test Periods, as amended below:

Rule 1005.1 Inspection and Test Periods

In addition to the routine inspection and tests (Rule 1004.2), the inspections and tests specified in ~~Rule 1005.2~~ Section 1005 shall be performed at intervals ~~not longer than 1 year, the inspections and tests specified in Rule 1005.3 shall be made at intervals not longer than 3 years, and the inspections and tests specified in Rule 1005.4 shall be made at intervals not longer than 5 years~~ determined by the building official.

~~NOTE: See Rule 1010.2 for private residence elevators.~~

SECTION 3032 —NO REQUIREMENTS.

SECTION 3033 — PERIODIC INSPECTION AND TESTS OF ESCALATORS AND MOVING WALKS (ASME A17.1, RULE 1008.1)

Escalators and moving walks shall be inspected and tested in accordance with ASME A17.1, Rule 1008.1, Inspection and Test Periods, as amended below:

Rule 1008.1 Inspection and Test Periods

In addition to the routine inspection and test (Rule 1007.2), the inspection and tests specified in Rule 1008.2, inspection and test of all safety switches and a certificate of cleaning the escalator trusses and pan shall be performed at intervals not longer than ~~1~~ 2 years.

Section 152. Section 3102 of the 1994 Uniform Building Code is amended as follows:

Section 3102 — CHIMNEYS, FIREPLACES AND BARBECUES

3102.1 Scope. Chimneys, flues, fireplaces and barbecues, and their connections, carrying products of combustion shall conform to the requirements of this section.

3102.2 Definitions.

BARBECUE is a stationary open hearth or brazier, either fuel fired or electric, used for food preparation.

CHIMNEY is a hollow shaft containing one or more passageways, vertical or nearly so, for conveying products of combustion to the outside atmosphere.

CHIMNEY CLASSIFICATIONS:

Chimney, High–heat Industrial Appliance–type, is a factory–built, masonry or metal chimney suitable for removing the products of combustion from fuel–burning high–heat appliances producing combustion gases in excess of 2,000°F. (1093°C.) measured at the appliance flue outlet.

Chimney, Low–heat Industrial Appliance–type, is a factory–built, masonry or metal chimney suitable for removing the products of combustion from fuel–burning low–heat appliances producing combustion gases not in excess of 1,000°F. (538°C.) under normal operating conditions but capable of producing combustion gases of 1,400°F. (760°C.) during intermittent forced firing for periods up to one hour. All temperatures are measured at the appliance flue outlet.

Chimney, Medium–heat Industrial Appliance–type, is a factory–built, masonry or metal chimney suitable for removing the products of combustion from fuel–burning medium–heat appliances producing combustion gases not in excess of 2,000°F. (1093°C.) measured at the appliance flue outlet.

Chimney, Residential Appliance–type, is a factory–built or masonry chimney suitable for removing products of combustion from residential–type appliances producing combustion gases not in excess of 1,000°F. (538°C.) measured at the appliance flue outlet.

CHIMNEY CONNECTOR is the pipe or breeching which connects a fuel–burning appliance to a chimney. (See Chapter 9, Mechanical Code.)

CHIMNEY, FACTORY–BUILT, is a chimney manufactured at a location other than the building site and composed of listed factory–built components assembled in accordance with the terms of the listing to form the completed chimney.

CHIMNEY LINER is a lining material of fireclay tile or approved fireclay refractory brick. For guideline standard on fireclay refractory brick see Sections 3502 and 3503, ASTM C 27, Fireclay Refractories.

FIREBRICK is a refractory brick.

FIREPLACE is a hearth and fire chamber or similar prepared place in which a fire may be made and which is built in conjunction with a chimney.

Factory–built Fireplace is a listed assembly of a fire chamber, its chimney and related factory–made parts designed for unit assembly without requiring field construction. Factory–built fireplaces are not dependent on mortar–filled joints for continued safe use.

Masonry Fireplace is a hearth and fire chamber of solid masonry units such as bricks, stones, masonry units, or reinforced concrete provided with a suitable chimney.

MASONRY CHIMNEY is a chimney of masonry units, bricks, stones or listed masonry chimney units lined with approved flue liners. For the purpose of this chapter, masonry chimneys shall include reinforced concrete chimneys.

3102.3 Chimneys, General.

3102.3.1 Chimney support. Chimneys shall be designed, anchored, supported and reinforced as required in this chapter and applicable provisions of Chapters 16, 18, 19, 21 and 22 of this code. A chimney shall not support any structural load other than its own weight unless designed as a supporting member.

3102.3.2 Construction. Each chimney shall be so constructed as to safely convey flue gases not exceeding the maximum temperatures for the type of construction as set forth in Table 31–B and shall be capable of producing a draft at the appliance not less than that required for safe operation.

3102.3.3 Clearance. Clearance to combustible material shall be as required by Table 31–B.

3102.3.4 Lining. When required by Table 31–B, chimneys shall be lined with fireclay flue tile, firebrick, molded refractory units or other approved lining not less than 5/8 inch (15.9 mm) thick as set forth in Table 31–B. Chimney liners shall be carefully bedded in approved mortar with close–fitting joints left smooth on the inside.

3102.3.5 Area. Chimney passageways shall not be smaller in area than the vent connection on the appliance attached thereto or not less than that set forth in Table 31–A, unless engineering methods approved by the building official have been used to design the system.

3102.3.6 Height and termination. Every chimney shall extend above the roof and the highest elevation of any part of a building as shown in Table 31–B. For altitudes over 2,000 feet (610 m), the building official shall be consulted in determining the height of the chimney.

3102.3.7 Cleanouts. Cleanout openings shall be provided within 6 inches (152 mm) of the base of every masonry chimney.

((~~3102.3.8 Spark arrester. Where determined necessary by the building official due to local climatic conditions or where sparks escaping from the chimney would create a hazard, chimneys attached to any appliance or fireplace that burns solid fuel shall be equipped with an approved spark arrester. The net free area of the spark arrester shall not be less than four times the net free area of the outlet of the chimney. The spark arrester screen shall have heat and corrosion resistance equivalent to (0.109 inch (2.77 mm) (No. 12 B.W. gage) wire, 0.042 inch (1.07 mm) (No. 19 B.W. gage) galvanized wire or 0.022 inch (0.56 mm) (No. 24 B.W. gage) stainless steel. Openings shall not permit the passage of spheres having a diameter larger than 1/2 inch (12.7 mm) and shall not block the passage of spheres having a diameter of less than 3/8 inch (9.5 mm).~~

~~Chimneys used with fireplaces or heating appliances in which solid or liquid fuel is used shall be provided with a spark arrester as required in the Fire Code.~~

~~EXCEPTION: Chimneys which are located more than 200 feet (60 960 mm) from any mountainous, brush-covered or forest-covered land or land covered with flammable material and are not attached to a structure having less than a Class C roof covering, as set forth in Chapter 15.~~))

3102.4 Masonry Chimneys.

3102.4.1 Design. Masonry chimneys shall be designed and constructed to comply with Sections 3102.3.2 and 3102.4.2.

3102.4.2 Walls. Walls of masonry chimneys shall be constructed as set forth in Table 31–B.

3102.4.3 Reinforcing and seismic anchorage. Unless a specific design is provided, every masonry or concrete chimney in Seismic Zones 2, 3 and 4 shall be reinforced with not less than four No. 4 steel reinforcing bars conforming to the provisions of Chapter 19 or 21 of this code. The bars shall extend from the top of the smoke chamber to the chimney cap in a fireplace and the full height of the chimney not serving a fireplace and shall be spliced in accordance with the applicable requirements of Chapter 19 or 21. In masonry chimneys the vertical bars shall have a minimum cover of 1/2 inch (13 mm) of grout or mortar tempered to a pouring consistency. The bars shall be tied horizontally at ((~~18 inch (457 mm)~~)) not more than 16-inch (406 mm) intervals for concrete products in running bond, 9-inch (229 mm) intervals for all other products, with not less than 1/4–inch–diameter (6.4 mm) steel ties or 4-inch (102 mm) standard weight masonry joint reinforcement when one of the following occurs:

1. The distance between the vertical bars and the exterior face of the chimney is greater than 20 inches (508 mm), or

2. The distance between the vertical bars is greater than 28 inches (711 mm).

Regardless of vertical bar spacing, horizontal reinforcement shall be provided at all floor and ceiling lines as well as in the chimney cap. The slope of the inclined portion of the offset in vertical bars shall not exceed 2 units vertical in 1 unit horizontal (200% slope). ((~~Two ties shall also be placed at each bend in vertical bars.~~)) Where the width of the chimney exceeds ((~~40 inches (1016 mm)~~)) 60 inches (1524 mm), two additional No. 4 vertical bars shall be provided for each additional flue incorporated in the chimney or for each additional ((~~40 inches (1016 mm)~~)) 60 inches (1524 mm) in width or fraction thereof.

In Seismic Zones 2, 3 and 4, all masonry and concrete chimneys shall be anchored at each floor or ceiling line more than 6 feet (1829 mm) above grade, except when constructed completely within the exterior walls of the building. Anchorage shall consist of two 3/16–inch by 1–inch (4.8 mm by 25 mm) or equivalent steel straps connected around the nearest vertical bars with a 180-degree bend or a 90-degree bend with an extension of at least 6 inches (152 mm) into the grout space. When straps are connected around the vertical bars in the outer face of the chimney as specified above for the nearest vertical bars, horizontal reinforcement will not be required at floor and ceiling lines and in the chimney cap provided the distance between the vertical bars and the exterior face of the chimney is not greater than 20 inches (508 mm) and the distance between vertical bars is not greater than 28 inches (711 mm). ((~~cast at least 12 inches (305 mm) into the chimney with a 180-degree bend with a 6-inch (152 mm) extension around the vertical reinforcing bars in the outer face of the chimney.~~))

Each strap shall be fastened to the structural framework of the building with two 1/2–inch–diameter (12.7 mm) bolts per strap. Where the joists do not head into the chimney, the anchor strap shall be connected to 2–inch by 4–inch (51 mm by 102 mm) ties crossing a minimum of four joists. The ties shall be connected to each joist with two 16d nails. As an alternative to the 2–inch by 4–inch (51 mm by 102 mm) ties, each anchor strap shall be connected to the structural framework by two 1/2–inch–diameter (12.7 mm) bolts in an approved manner.

3102.4.4 Chimney offset. Masonry chimneys may be offset at a slope of not more than 4 inches in 24 inches (102 mm in 610 mm), but not more than one third of the dimension of the chimney, in the direction of the offset. The slope of the transition from the fireplace to the chimney shall not exceed 2 units vertical in 1 unit horizontal (200% slope).

3102.4.5 Change in size or shape. Changes in the size or shape of a masonry chimney, where the chimney passes through the roof, shall not be made within a distance of 6 inches (152 mm) above or below the roof joists or rafters.

3102.4.6 Separation of masonry chimney passageways. ((~~Two~~)) Three or more flues in a chimney shall be separated such that there are no more than two adjacent flues. Interior voids greater than 24 inches (610 mm) in any dimension shall be separated. The separation shall be by masonry not less than 4 inches (102 mm) thick bonded into the masonry wall of the chimney. Reinforcing and anchorage shall be provided as specified in Section 3102.4.3.

3102.4.7 Inlets. Every inlet to any masonry chimney shall enter the side thereof and shall be of not less than 1/8–inch–thick (3.2 mm) metal or 5/8–inch–thick (16 mm) refractory material. Where there is no other opening below the inlet other than the cleanout, a masonry plug shall be constructed in the chimney not more than 16 inches (406 mm) below the inlet and the cleanout shall be located where it is accessible above the plug. If the plug is located less than 6 inches (152 mm) below the inlet, the inlet may serve as the cleanout.

3102.5 Factory–built Chimneys and Fireplaces.

3102.5.1 General. Factory–built chimneys and factory–built fireplaces shall be listed and shall be installed in accordance with the terms of their listings and the manufacturer's instructions as specified in the Mechanical Code.

3102.5.2 Hearth extensions. Hearth extensions of listed factory–built fireplaces shall conform to the conditions of listing and the manufacturer's installation instructions.

3102.5.3 Multiple venting in vertical shafts. Factory–built chimneys utilized with listed factory–built fireplaces may be used in a common vertical shaft having the required fire–resistance rating.

3102.6 Metal Chimneys. Metal chimneys shall be constructed and installed to meet the requirements of the Mechanical Code.

Metal chimneys shall be anchored at each floor and roof with two 1-1/2–inch by 1/8–inch (38 mm by 3.2 mm) metal straps looped around the outside of the chimney installation and nailed with not less than six 8d nails per strap at each joist.

3102.7 Masonry and Concrete Fireplaces and Barbecues.

3102.7.1 General. Masonry fireplaces, barbecues, smoke chambers and fireplace chimneys shall be of masonry or reinforced concrete and shall conform to the requirements of this section.

See Seattle Energy Code and Seattle Mechanical Code for additional requirements.

Code Alternate CA3102.7: The building official shall accept fireplaces designed and constructed in accordance with the "Residential Fireplace & Chimney Construction Standards" promulgated by the Masonry Institute of Washington.

3102.7.2 Support. Masonry fireplaces shall be supported on foundations designed as specified in Chapters 16, 18 and 21.

When an approved design is not provided, foundations for masonry and concrete fireplaces shall not be less than 12 inches (305 mm) thick, extend not less than 6 inches (152 mm) outside the fireplace wall and project below the natural ground surface in accordance with the depth of foundations set forth in Table 18–I–D.

3102.7.3 Fireplace walls. Masonry walls of fireplaces shall not be less than 8 inches (203 mm) in thickness in the back and 7 inches (178 mm) in thickness on the sides. ((~~Walls of fireboxes shall not be less than 10 inches (254 mm) in thickness, except that where a lining of firebrick is used, such walls shall not be less than a total of 8 inches (203 mm) in thickness.~~)) The firebox shall not be less than 20 inches (508 mm) in depth measured from the back of the firebox to the finished face of the fireplace and shall be lined with 4-1/2 inches (114 mm) of firebrick laid flat in the back and 2-1/2 inches (64 mm) of firebrick on the sides. Joints in firebrick shall not exceed 1/4 inch (6 mm).

EXCEPTION: For Rumford fireplaces, the depth may be reduced to 12 inches (305 mm) when:

1. The depth is at least one third the width of the fireplace opening.
2. The throat is at least 12 inches (305 mm) above the lintel and is at least 1/20 of the cross–sectional area of the fireplace opening.

3102.7.4 Hoods. Metal hoods used as part of a fireplace or barbecue shall not be less than 0.036 inch (0.92 mm) (No. 19 carbon sheet steel gage) copper, galvanized steel or other equivalent corrosion–resistant ferrous metal with all seams and connections of smokeproof unsoldered constructions. The hoods shall be sloped at an angle of 45 degrees or less from the vertical and shall extend horizontally at least 6 inches (152 mm) beyond the limits of the firebox. Metal hoods shall be kept a minimum of 18 inches (457 mm) from combustible materials unless approved for reduced clearances.

3102.7.5 Metal heat circulators. Approved metal heat circulators may be installed in fireplaces.

3102.7.6 Smoke chamber. Front and side walls shall not be less than 8 inches (203 mm) in thickness. Smoke chamber back walls shall not be less than 6 inches (152 mm) in thickness.

3102.7.7 Chimneys. Chimneys for fireplaces shall be constructed as specified in Sections 3102.3, 3102.4 and 3102.5 for residential–type appliances.

3102.7.8 Clearance to combustible material. Combustible materials shall not be placed within 2 inches (51 mm) of fireplace, smoke chamber or chimney walls. Combustible material shall not be placed within 6 inches (152 mm) of the fireplace opening. No such combustible material within 12 inches (305 mm) of the fireplace opening shall project more than 1/8 inch (3 mm) for each 1–inch (25 mm) clearance from such opening.

No part of metal hoods used as part of a fireplace or barbecue shall be less than 18 inches (457 mm) from combustible material. This clearance may be reduced to the minimum requirements specified in the Mechanical Code.

3102.7.9 Areas of flues, throats and dampers. The net cross–sectional area of the flue and of the throat between the firebox and the smoke chamber of a fireplace shall not be less than as set forth in Table 31–A. Tight-fitting m((~~M~~))etal dampers equivalent to not less than 0.097 inch (2.46 mm) (No. 12 carbon sheet metal gage) steel shall be installed. When fully opened, damper openings shall not be less than 90 percent of the required flue area.

3102.7.10 Lintel. Masonry over the fireplace opening shall be supported by a noncombustible lintel.

3102.7.11 Hearth. Masonry fireplaces shall be provided with a brick, concrete, stone or other approved noncombustible hearth slab. This slab shall ((~~not~~)) be lined with 2-1/2 inches (64 mm) of firebrick and shall not be less than ((~~4 inches (102 mm)~~)) 6 inches (152 mm) in total thickness. ((~~thick and~~)) It shall be supported by noncombustible materials or reinforced to carry its own weight and all imposed loads. Combustible forms and centering shall be removed.

3102.7.12 Hearth extensions. ((~~Hearths shall extend~~)) Masonry fireplaces shall be provided with a brick, concrete, stone or other approved noncombustible hearth extension, extending at least 16 inches (406 mm) from the front of, and at least 8 inches (203 mm) beyond each side of, the fireplace opening. Where the fireplace opening is 6 square feet (0.56 m^2) or larger, the hearth extension shall extend at least 20 inches (508 mm) in front of, and at least 12 inches (305 mm) beyond each side of, the fireplace opening. It shall not be less than 4 inches (102 mm) thick when reinforced to carry its own weight and all imposed loads, and not less than 2 inches (51 mm) thick when supported by approved noncombustible materials.

Except for fireplaces which open to the exterior of the building, the hearth slab shall be readily distinguishable from the surrounding or adjacent floor.

3102.7.13 Fire blocking. Fire blocking between chimneys and combustible construction shall meet the requirements specified in Section 708.

Section 153. Section 3103 of the 1994 Uniform Building Code is amended as follows:

Section 3103 — TEMPORARY BUILDINGS OR STRUCTURES

See Section 106.10.

((~~Temporary buildings or structures such as reviewing stands and other miscellaneous structures, sheds, canopies or fences used for the protection of the public around and in conjunction with construction work may be erected by special permit from the building official for a limited period of time. Such buildings or structures need not comply with the type of construction or fire-resistive time periods required by this code. Temporary buildings or structures shall be completely removed upon the expiration of the time limit stated in the permit.~~))

Section 154. The 1994 Uniform Building Code is amended by adding Chapter 32 as follows:

Chapter 32

CONSTRUCTION IN THE PUBLIC RIGHT OF WAY, MARQUEES, AWNINGS AND SIGNS

Section 3201 — GENERAL

Any encroachment of a building or structure on, over or under sidewalks, streets and other public property is subject to approval by the Director of Engineering and/or the building official.

Structures or appendages regulated by this code shall be constructed of materials as specified in Section 705 except marquees which shall be constructed of materials as specified in Section 3203 and awnings which shall be constructed of materials as specified in Section 3204.

The projection of any structure or appendage shall be the distance measured horizontally from the property line to the outermost point of the projection.

No provisions of this chapter shall be construed to permit the violation of other laws or ordinances regulating the use and occupancy of public property.

SECTION 3202 -- STRUCTURAL BUILDING OVERHANGS

3202.1 General. Structural building overhangs are encroachments into public property which include cornices, eaves, sills, belt courses, bay windows, balconies, facade treatment and other architectural features. They shall be designed in accordance with the standards set forth in this section and rules promulgated by the building official.

3202.2 Construction and Location. Structural building overhangs, when approved, shall meet all of the requirements of this code and be designed in accordance with the following standards:

1. Vertical clearance shall be a minimum of 8 feet from the sidewalk or 26 feet from the alley, or greater when required by other regulations.

2. Overhead horizontal projections of a purely architectural or decorative character such as cornices, eaves, sills and belt courses shall be limited to a maximum horizontal extension of one foot and a maximum vertical dimension of two feet six inches, and shall not increase the floor area or the volume of space enclosed by the building. At roof level, the projections may extend not more than three feet horizontally. The vertical dimension of the overhead horizontal projection at the roof level may be increased if the roof level is 100 feet or higher above the street elevation. The total area of these projections shall not exceed 30 percent of the area of any one facade. (See Figure 32-1.)

3. Exceptions to the standards in this section may be authorized for historic or rehabilitated buildings, when they are consistent with the scope and intent of these standards.

4. Vertical bay (projecting) windows, balconies (other than balconies used for primary access), and similar features that increase either the floor area of the building or the volume of space enclosed by the building above grade, shall be limited as follows:

A. The maximum horizontal projection shall be three feet and the projection shall in no case be closer than eight feet to the center line of any alley. (See Figure 32-5.)

B. The glass areas of each bay window, and the open portions of each balcony, shall not be less than 50 percent of the sum of the areas of the vertical surfaces of such bay window or balcony above the required open area. At least 1/3 of such required glass area of such bay window, and open portions of such balcony, shall be on one or more vertical surfaces situated at an angle of not less than 30 degrees to the line establishing the required open area. In addition, at least 1/3 of such required glass area or open portions shall be on the vertical surface parallel to, or most nearly parallel to, the line establishing each open area over which the bay window or balcony projects.

C. The maximum length of each bay window or balcony shall be 15 feet at the line establishing the required open area (see Figure 32-2), and shall be reduced in proportion to the distance from such line by means of 45-degree angles drawn inward from the ends of such 15-foot dimension, reaching a maximum of nine feet along a line parallel to and at a distance of three feet from the line establishing the required open area.

D. Where a bay window and a balcony are located immediately adjacent to one another, and the floor of such balcony in its entirety has a minimum horizontal dimension of six feet, the limit set in Item C above, shall be increased to a maximum length of 18 feet at the line establishing the required open area, and a maximum of 12 feet along a line parallel to and at a distance of three feet from the line establishing the required open area. (See Figure 32-6.)

E. The minimum horizontal separation between bay windows, between balconies, and between bay windows and balconies (except where a bay window and a balcony are located immediately adjacent to one another, as provided for in Item D, above), shall be two feet at the line establishing the required open area, and shall be increased in proportion to the distance from such line by means of 135-degree angles drawn outward from the ends of such two-foot dimension, reaching a minimum of eight feet along a line parallel to and at a distance of three feet from the line establishing the required open area. (See Figure 32-3.)

F. Each bay window or balcony over a street or alley shall also be horizontally separated from interior lot lines (except where the wall of a building on the adjoining lot is flush to the interior lot line immediately adjacent to the projecting portions of such bay window or balcony) by not less than one foot at the line establishing the required open area, with such separation increased in proportion to the distance from such line by means of a 135-degree angle drawn outward from such one-foot dimension, reaching a minimum of four feet along a line parallel to and at a distance of three feet from the line establishing the required open area. (See Figure 32-4.)

SECTION 3203 -- MARQUEES

3203.1 General. For the purpose of this section, a marquee shall include any object or decoration attached to or a part of a marquee.

3203.2 Size and Location. No marquee shall project more than 16 feet from the face of the building to which it is attached. No marquee shall project closer than 2 feet from any curb.

3203.3 Construction. Marquees shall be of noncombustible material or one-hour fire-resistive construction.

3203.4 Drainage. Marquees shall be provided with conductors for water which shall drain back to the building line and be connected to a sewer or, if approved by the Director of Engineering, to a dry well or under a sidewalk to a gutter.

3203.5 Loads. Marquees shall be designed to comply with the load requirements contained in Table 16-A.

Section 3204 — AWNINGS

3204.1 Scope. All awnings shall be subject to the requirements of this section. Awnings containing electrical wiring and light fixtures shall also be subject to the Seattle Electrical Code. Awnings over a public place shall comply with the Street and Sidewalk Use Ordinance (Title 15, Seattle Municipal Code).

3204.2 DEFINITIONS. For the purposes of this chapter, certain terms are defined as follows:

AWNING is a nonrigid, fabric-covered protective covering attached to an exterior wall of a building.

AWNING SIGN is a sign applied to the surface of an awning.

FIRE-RETARDANT COVERING is a material which has a flame spread rating of less than 15 when tested to ASTM-E84.

SIGN. See Section 3205.3.

VENEER. See Section 1403.2.

3204.3 Permits Required. No awning shall be erected, constructed, altered or structurally revised without a permit issued by the building official.

A sign/awning permit shall be required for an awning specific to any business entity. A single permit may be issued for a single awning which serves a multi-tenant building. A single permit may be issued for all awning signs for each business entity installed concurrently. Awning signs for separate business entities must have a separate sign permit whether or not located on a separate awning. Subsequent installation of an awning or awning sign shall require a separate permit.

Painting, cleaning, repair and other maintenance shall not require a permit unless a structural change is made or the awning is covered with new fabric.

3204.4 Permit Application. To obtain a permit as required by this chapter, the applicant shall file an application which shall include the following:

1. The location of the proposed awning on the building;

2. Plans or drawings and specifications;

3. Signature of the building owner or an authorized agent;

4. Permit fee as specified in the Permit Fee Ordinance.

3204.5 Inspections. All awnings shall be subject to inspection and periodic reinspection by the building official.

3204.6 Maintenance Of Awnings And Closure Of Business

3204.6.1 Maintenance. All awnings, together with their supports, braces and anchors, shall be kept in good repair and in a proper state of preservation. The surface of all awnings shall be kept clean and protected with a sealer-type solution. The building official may order the removal of any awning not properly maintained or no longer in use and may cancel the permit.

3204.6.2 Closure of Business. Within 90 days after the date of cessation of a business or activity, the operator of the business or activity shall remove all awnings relating to the business or activity. Failure to remove any awning within the 90-day period shall be a violation of this code unless the business or activity is resumed during that period.

3204.7 Construction.

3204.7.1 General. Awnings shall have noncombustible or aluminum frames and fire-retardant coverings. All structural welding shall conform to the requirements of Chapter 20 for aluminum and Chapter 22 for steel.

3204.7.2 Electric signs. No electric sign, including a neon assembly, shall be attached to, or located on, any part of the frame of an awning.

3204.7.3 Light fixtures. No electric light fixture shall be mounted or attached to the frame of an awning.

EXCEPTIONS: 1. The building official may approve light fixtures secured to the vertical and horizontal rear frame members of the awning.

2. The building official may approve light fixtures secured to the frame of an awning located at the entrance to a building, provided adequate bracing is designed and installed to sustain the additional loads imposed by the weight of the light fixtures.

3204.7.4 Obstruction of Light and Ventilation. An awning shall not reduce the light or ventilation to any occupancy below requirements of this code.

3204.7.5 Clearances. All portions of awnings shall be at least 8 feet (2438 mm) above the walking surface immediately below. No portion of the surface or support of an awning, including a retracted awning, shall interfere with the free use of a fire escape, exit or standpipe.

3204.7.6 Retractable awnings. Retractable awnings shall be collapsible, retractable or capable of being folded against the face of the supporting building.

3204.7.7 Labels. Every awning shall display the name of the manufacturer and/or contractor.

3204.8 Design

3204.8.1 Design Loads--General. Awnings shall be designed and constructed to resist all forces to which they are subject as specified in Chapter 16. The frame shall be designed and constructed to transfer all forces to the structural frame of the building or structure.

3204.8.2 Pitch. The upper surface of all awnings shall have a pitch of at least thirty degrees from the horizontal.

3204.8.3 Attachment to Masonry, Concrete or Steel. All awnings attached to masonry, concrete or steel shall be safely secured with steel anchors and bolts, or approved rated expansion bolts of sufficient size and anchorage to support the loads safely.

3204.8.4 Attachment to Parapet Walls. No anchor or support of an awning shall be connected to or supported by a parapet wall unless the wall is designed for the added forces.

3204.8.5 Attachment to Veneer. No support or attachment for an awning shall be connected to, supported by, or fastened to exterior veneer.

3204.8.6 Prohibited Anchorage. Wooden blocks, plugs or anchors with wood used in connection with screws or nails shall not be used as anchorage. Lead plugs or anchors shall not be used to support an awning.

SECTION 3205 -- SIGNS AND OUTDOOR DISPLAYS

3205.1 Purpose. It is the purpose of this chapter to safeguard the life, health, property and welfare of the citizens of the City by regulating and controlling the design, quality of materials, construction, location, illumination, and maintenance of signs and sign structures visible from any portion of public property or rights-of-way.

3205.2 Enforcement

3205.2.1 Authority. The building official is hereby authorized and directed to enforce all of the provisions of this chapter, Chapter 23.55 of the Land Use Code and the Zoning Code relating to signs erected and maintained on private property. The Director of Engineering and the building official shall enforce the provisions of this chapter and Chapter 23.55 of the Land Use Code and the Zoning Code, Title 24, as they relate to signs over public places as defined in Section 15.02.040 of the Seattle Municipal Code.

Signs erected without permit as required by Section 3205.4 which do not conform to the provisions of this chapter and Chapter 23.55 of the Land Use Code, shall be removed upon notification in writing by the building official.

3205.2.2 Other Requirements. All signs shall comply with any additional regulations as to type, height, clearance, size, copy, design and location imposed by the Land Use Code, and Title 15, Seattle Municipal Code, Street and Sidewalk Use, as amended, and other ordinances of the City. Signs which are unregulated by the Land Use Code may be subject to requirements of this chapter.

3205.3 DEFINITIONS. For the purposes of this chapter, certain terms shall be defined as follows:

APPROVED PLASTIC MATERIALS are those plastic materials which have a flame spread rating of 225 or less when tested in accordance with U.B.C. Standard 8-1, in the way intended for use; and a smoke density rating no greater than 450 when tested in accordance with U.B.C. Standard 8-1, in a way intended for use; or a smoke density rating no greater than 75 when tested in the thickness intended for use by the chamber method of test under U.B.C. Standard 26-5.

The products of combustion shall be no more toxic than those of untreated wood when burned under similar conditions.

BILLBOARD is a ground, wall, or roof sign erected, constructed, or maintained for the purpose of displaying outdoor advertising by means of pictorial or reading matter attached thereto or posted thereon and available by means of rental to persons other than the owner of the sign.

BUILDING FACADE is that portion of any exterior elevation of a building extending from the grade of the building to the top of the parapet wall or eaves, for the entire width of the building elevation.

BUILDING FACADE FACING is a resurfacing of an existing facade with approved material.

BULLETIN BOARD is a board for messages for users of the premises on which the board is erected and not intended for view from the public right-of-way. A bulletin board is not a sign.

DISPLAY SURFACE is the area of a sign structure used to display the advertising message.

ELECTRIC SIGN is any sign containing electrical wiring, but not including signs illuminated by an exterior light source.

FABRIC SIGN is a sign made of canvas, cloth or similar non-rigid material.

MARQUEE SIGN is a sign placed on, constructed in or attached to a marquee.

NONSTRUCTURAL TRIMS are the moldings, battens, caps, nailing strips, latticing or cutouts which are attached to the sign structure.

ON-PREMISE DIRECTIONAL SIGN is an on-premise incidental sign designed to direct pedestrian or vehicular traffic.

ON-PREMISE SIGN is a sign which displays messages which are strictly applicable only to a use of the premises on which it is located, including signs or sign devices indicating the business transacted, principal services rendered, goods sold or produced on the premises, name of the business, and name of the person, firm or corporation occupying the premises. This definition shall not include signs located within a business establishment except signs oriented so as to be visible through a window.

PORTABLE SIGN is a sign which is not permanently affixed and is designed for or capable of being moved, except those signs explicitly designed for people to carry on their persons or which are permanently affixed to motor vehicles.

PROJECTING SIGN is a sign other than a wall sign, which projects from and is supported by a wall of a building or structure.

PROJECTION is the distance by which a sign extends over public property or beyond the building line.

ROOF SIGN is a sign erected upon or above a roof or parapet of a building or structure.

SIGN is any medium, including its structure and component parts, which is used or intended to be used to attract attention to the subject matter for advertising, identification or informative purposes.

SIGN STRUCTURE is any structure which supports or is designed to support any sign as defined in this chapter. A sign structure may be a single pole or may be an integral part of the building.

WALL SIGN is any sign attached to and supported by a wall of a building or structure, with the exposed face of the sign on a plane parallel to the plane of the wall.

3205.4 Permits Required

3205.4.1 Permanent Signs. No sign shall be erected, re-erected, constructed, painted, posted, applied, altered, structurally revised or repaired, except as provided in this chapter and Chapter 23.55 of the Land Use Code and pursuant to a permit issued by the building official.

A separate permit shall be required for a sign or signs for each business entity and/or a separate permit for each group of signs on a single supporting structure installed simultaneously. Thereafter, each additional sign erected on the structure must have a separate permit, including electric signs. In addition, electrical permits shall be obtained for circuits for electric signs and street use permits shall be required for signs over any public place pursuant to the Street Use Ordinance as amended.

EXCEPTION: The following sign activity shall not require a permit, provided the owner of any such sign shall continue to have the responsibility of erection and maintenance of such sign and for compliance with the provisions of this chapter and any other law or ordinance regulating signs:

1. Signs which are located within the interior of the building and which are not visible from the public right-of-way unless:

1.1 The sign is mounted within an interior shared pedestrian mall of a multi-tenant retail facility; located over or adjoining the pedestrian walking surface; and

1.2. When any individually mounted element of the sign is greater than 10 square feet in area or when it is an electric sign;

2. The changing of the advertising copy or message on a lawfully erected painted or printed sign, theater marquee, gasoline price sign or similar sign specifically designed for the use of replaceable copy;

3. Painting, repainting, cleaning, repairing, and other normal maintenance unless a structural or electrical change is made;

4. One business identification sign, nonelectrical and non-illuminated, 1-1/2 square feet or less in area and permanently affixed to the building facade or wall on a plane parallel to the building facade or wall located entirely on private property;

5. On-premises directional and information signs not over 5 square feet in area;

6. One bulletin board not over 12 square feet in area and not over 8 feet in height for each public, charitable or religious institution when located on the wall of the institution;

7. Memorial signs or tablets and names of buildings and dates of building erection when cut into a masonry surface or constructed of bronze or other noncombustible material;

8. Signs of public service companies indicating danger and/or providing service or safety information.

3205.4.2 Permits Not Required for Temporary Signs. The erection, re-erection, construction, posting or placement of temporary signs as permitted by Section 23.55.012 of the Land Use Code shall not require a temporary sign permit. The owner of any such sign shall be responsible for compliance with the provisions of this section and other law or ordinance regulating signs. Permanent sign permits shall be required for signs which do not comply with the standards for temporary signs found in 23.55.012 of the Land Use Code when required by Section 3205.4.1.

3205.4.3 Number of Signs. Temporary signs as permitted by Section 23.55.012 of the Land Use Code and signs not requiring a permit as specified in Section 3205.4.1 shall not be included as part of the maximum number of signs permitted under Chapter 23.55 of the Land Use Code.

3205.4.4 Attachments to Signs. Ancillary devices, displays and attachments not originally a part of the sign for which a permit was issued shall not be added to an existing sign except as provided in this chapter, Chapter 23.55 of the Land Use Code and pursuant to another permit issued by the building official.

3205.5 Permit Application. To obtain a sign permit, the applicant shall file an application which shall:

1. Clearly indicate the precise location of the proposed sign;

2. Be accompanied with adequate plans and specifications;

EXCEPTION: The building official may waive submission of plans and specifications when the structural aspect is of minor importance.

3. Be signed by the owner of the premises or an authorized agent; and

4. Be accompanied by the permit fee specified in the Permit Fee Ordinance.

3205.6 No requirements.

3205.7. No requirements.

3205.8 Inspections. All signs regulated by this chapter shall be subject to inspection and periodic reinspection by the building official.

All footing inspections shall be made by the building official.

All signs containing electrical wiring shall be subject to the Seattle Electrical Code. Refurbished, used electrical signs and field-assembled electrical signs shall be inspected by the building official.

3205.9 Maintenance and Closure of Business

3205.9.1 Maintenance. All signs, together with all of their supports, braces, guys and anchors, shall be kept in good repair and in a proper state of preservation. The display surface of all signs shall be kept neatly painted or posted at all times. The building official may order the removal of all signs not properly maintained or no longer in use by the owner, occupant or lessee, and the permit therefore may be canceled.

3205.9.2 Closure of Business - Abandoned Signs. Upon the closure and vacation of a business or activity, the operator of the business or activity shall be responsible for the removal of all signs relating to the business or activity within 90 days from the date of such closure. If the operator of the business or activity fails to remove the signs within the designated time period and said business or activity is not reoccupied or resumed during the 90-day period, then the owner of the premises upon which the signs are located shall be responsible for the removal of the signs within 180 days from the date of closure and vacation of the premises.

3205.10 Nonconforming Signs. A nonconforming sign is a sign or any portion thereof which because of its location or construction could not lawfully be reconstructed in its present location. A nonconforming sign shall have no additions thereto.

EXCEPTION: Minor additions which the building official may find necessary in the interest of safety, or the changing of the advertising message thereon in connection with a change of ownership or tenancy of the premises, provided that the addition or physical change does not expand the nonconforming nature of the sign.

3205.11 General Requirements

3205.11.1 General. All signs shall conform to the requirements of this section.

3205.11.2 Clearance From High Voltage Power Lines. Signs shall be located no closer than 3 feet horizontally or 8 feet vertically from overhead electrical conductors which are energized at 750 volts or less and not less than 10 feet in any direction from overhead conductors energized at more than 750 volts. The term "overhead conductors" as used in this section means any electrical conductor, either bare or insulated, installed above the ground except such conductors as are enclosed in iron pipe or other material covering of equal strength.

3205.11.3 Clearance from Fire Escapes, Exits or Standpipes. No sign or sign structure shall be erected in such a manner that any portion of its surface or supports will interfere in any way with the free use of any fire escape, exit or standpipe.

3205.11.4 Obstruction of Openings. No sign shall obstruct any openings to such an extent that light or ventilation is reduced to a point below that required by this code.

Signs erected within 5 feet of an exterior wall in which there are openings within the area of the sign shall be constructed of noncombustible material or approved plastics.

3205.11.5 Supporting Members. Signs mounted on and attached to buildings shall be so designed and mounted that secondary structural members shall be incorporated into and become a part of the sign display. Exterior bracing such as angle irons, guy wires, cables and similar devices shall be permitted only where no other reasonable method of fastening consistent with safety is possible.

3205.11.6 Non-display Surfaces. If a sign is visible from more than one direction, all areas not intended as display surfaces including the back and sides shall be designed so that such areas are given a finished and pleasing appearance with the display surfaces visible only from the directions that they are intended to be seen.

3205.11.7 Label. Every permanent sign shall display the name of the sign erector.

3205.12 Design

3205.12.1 General. Signs and sign structures shall be designed and constructed to resist all forces to which they are subject as specified in Chapter 16 and this section. All signs shall be designed and installed to transfer all forces directly to the structural frame of the building or structure.

The overturning moment produced from lateral forces shall in no case exceed two thirds of the dead load resisting moment. Uplifts due to overturning shall be adequately resisted by proper anchorage to the ground or to the structural frame of the building. The weight of earth superimposed over footings may be used in determining the dead load resisting moment. Such earth shall be carefully placed and thoroughly compacted.

3205.12.2 Wind and Seismic Loads. Signs and sign structures shall be designed and constructed to resist wind and seismic forces as specified in Chapter 16 of this code.

3205.12.3 Allowable Stresses. The design of wood, concrete, steel or aluminum members shall conform to the requirements of Chapters 19, 20, 22 and 23. Loads, both vertical and horizontal, exerted on the soil shall not produce stresses exceeding those specified in Chapter 16 of this code.

The working stresses of wire rope and its fastenings shall not exceed 25 percent of the ultimate strength of the rope or fasteners.

3205.13 Construction

3205.13.1 General. The supports for all signs or sign structures shall be placed in or upon private property and shall be securely built, constructed, and erected in conformance with the requirements of this chapter. All structural welding on signs and sign structures shall conform to the requirements of Chapter 20 for aluminum and Chapter 22 for steel.

3205.13.2 Materials. Materials of construction for signs and sign structures shall be of quality and grade as specified for buildings in this code.

In all signs and sign structures the materials and details of construction shall, in the absence of specified requirements, conform with the following:

1. Structural steel shall be of such quality as to conform with U.B.C. Standard 22-1. Secondary members in contact with or directly supporting the display surface may be formed of light gauge steel provided such members are designed in accordance with the specifications of the design of light gauge steel as specified in Chapter 22, Division V, and in addition shall be galvanized. Secondary members, when formed integrally with the display surface, shall not be less than No. 24 gauge in thickness. When not formed integrally with the display surface, the minimum thickness of the secondary members shall be No. 12 gauge.

The minimum thickness of hot-rolled steel members furnishing structural support for signs shall be 1/4 inch except that if galvanized, such members shall not be less than 1/8 inch thick. Steel pipes shall be of such quality as to conform with U.B.C. Standard 22-1. Steel members may be connected with one galvanized bolt provided the connection is adequate to transfer the stresses in the members.

2. Anchors and supports, when of wood and embedded in the soil, or within 6 inches of soil, shall be of all heartwood of a durable species or shall be pressure-treated with an approved preservative. Such members shall be marked or branded by an approved agency.

3205.13.3 Restrictions on Combustible Materials. In the Fire District all signs and sign structural members shall be constructed of noncombustible materials.

EXCEPTIONS: 1. Signs fronting on streets or yards. Regardless of fire resistive requirements for exterior walls, certain elements of signs fronting on streets or yards having a width of 50 feet may be constructed as follows:

Wood veneer of boards not less than 1 inch nominal thickness or exterior type plywood panels not less than 3/8 inch nominal thickness may be applied to walls provided the veneer does not exceed 15 feet above grade, and further provided such veneer shall be placed either directly against noncombustible surfaces or furred out from such surfaces not to exceed 1-5/8-inches with all concealed spaces fire-stopped as provided by this code.

2. The display surface of a projecting sign may be of wood provided such sign is not more than 42 square feet in area, is constructed of materials not less than 2 inches in nominal thickness and is not over 15 feet in height, from ground level to the top of the sign.

3. Nonstructural trim as in 3205.13.4 below.

3205.13.4 Nonstructural Trim. Nonstructural trim and portable display surfaces may be of wood, metal, approved plastics or any combination thereof.

3205.13.5 Anchorage. Members supporting unbraced signs shall be so proportioned that the bearing loads imposed on the soil in either direction, horizontal or vertical, shall not exceed the safe values. Braced ground signs shall be anchored to resist the specified wind or seismic load acting in any direction. Anchors and supports shall be designed for safe bearing loads on the soil and for an effective resistance to pull-out amounting to a force 25 percent greater than the required resistance to overturning.

Signs attached to masonry, concrete or steel shall be safely and securely fastened thereto by means of metal anchors, bolts or approved expansion screws of sufficient size and anchorage to support safely the loads applied.

No wooden blocks or plugs or anchors with wood used in connection with screws or nails shall be considered proper anchorage except in the case of signs attached to wood framing.

No lead plugs or anchors shall be used to support signs.

No anchor or support of any sign shall be connected to or supported by an unbraced parapet wall unless the wall is designed or braced for the added forces.

3205.13.6 Display Surfaces. Display surfaces of wood may not be used in electric signs.

Sections of approved plastics on wall signs shall not exceed 150 square feet in area.

EXCEPTIONS: 1. Outside the Fire District the area of approved plastics may be increased by 50 percent.
2. Sections of approved plastics on signs other than wall signs may be of unlimited area if approved by the building official.

Sections of approved plastics on wall signs shall be separated 3 feet laterally and 6 feet vertically by the required exterior wall construction.

EXCEPTION: Sections of approved plastics on signs other than wall signs need not be separated if approved by the building official.

3205.13.7 Approved Plastics. The building official shall require that sufficient technical data be submitted to substantiate the proposed use of any plastic material and may approve its use if it is determined that the evidence submitted is satisfactory for the use intended.

3205.14 Roof Signs

3205.14.1 General. Roof signs shall be constructed of noncombustible material except as specified in Section 3205.13. When constructed on a building, the sign shall be thoroughly secured and anchored to the frame of the building on which it is constructed and erected.

3205.14.2 Clearance and Access. A passage clear of all obstructions shall be left under or around, and immediately adjacent to, signs exceeding a height of 4 feet above the roof. Such passage shall not be less than 3 feet wide and 4 feet high and shall be at parapet or roof level.

There shall be one such passage or access opening as follows:

1. For each roof sign upon a building.
2. An access opening for every 50 lineal feet of horizontal roof sign extension.
3. Within 20 feet of walls and parapets when roof signs are at right angles to a face of the building.

3205.15 Electric Signs

3205.15.1 Construction. Electric signs shall be constructed of noncombustible materials except as provided in Section 3205.13. The enclosed shell of electric signs shall be watertight except that service holes fitted with covers shall be provided into each compartment of such signs.

3205.15.2 Installation. Electrical equipment used in connection with display signs shall be installed in accordance with the Seattle Electrical Code.

3205.16 Temporary Fabric Signs. Temporary signs made of fabric or similar non-rigid material shall be supported and attached with wire rope of 3/8 inch minimum diameter. No strings, fiber ropes or wood slats shall be permitted for support or anchorage purposes. Temporary fabric signs and panels shall be perforated over at least 10 percent of their area to reduce wind resistance.

EXCEPTION: Temporary fabric signs over private property not exceeding 60 square feet may be supported and attached with wire rope which shall meet the requirements of Section 3205.12.

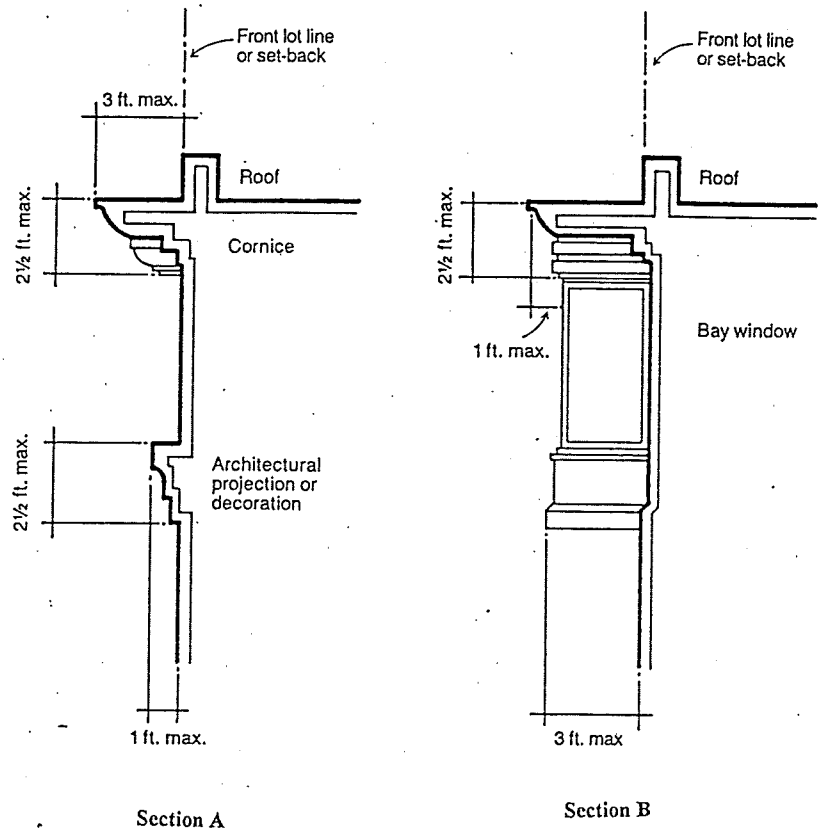

Figure 32-1

Figure 32-1 is a Seattle amendment to the Uniform Building Code.

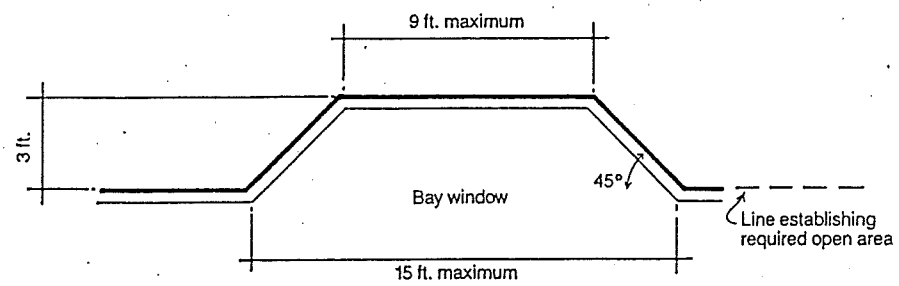

Figure 32-2

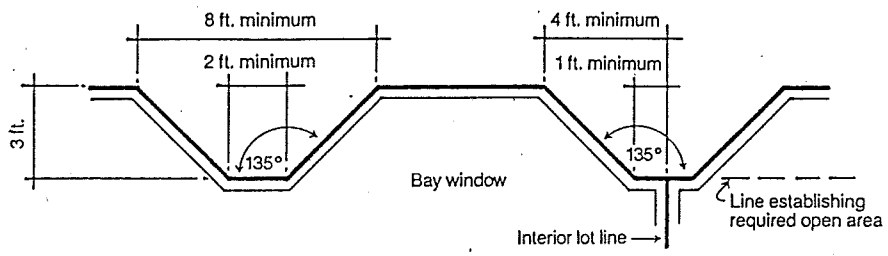

Figure 32-3

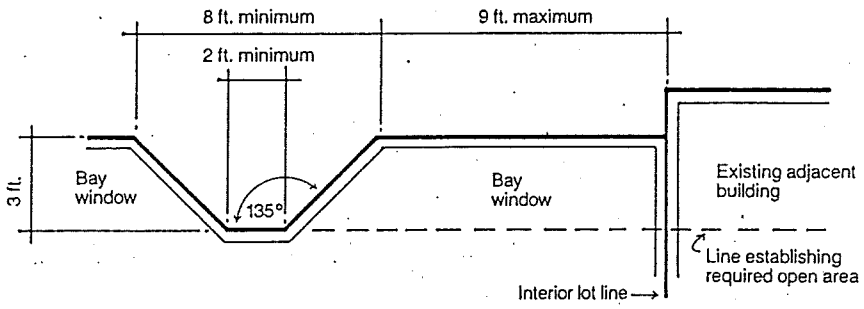

Figure 32-4

Figures 32-2, 32-3 and 32-4 are Seattle amendments to the Uniform Building Code.

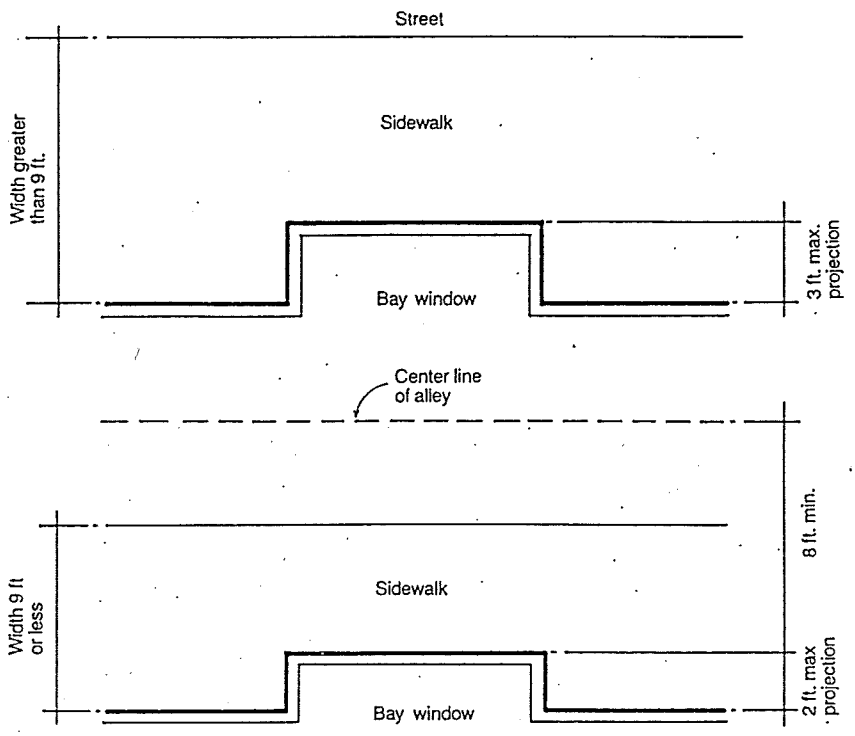

Figure 32-5

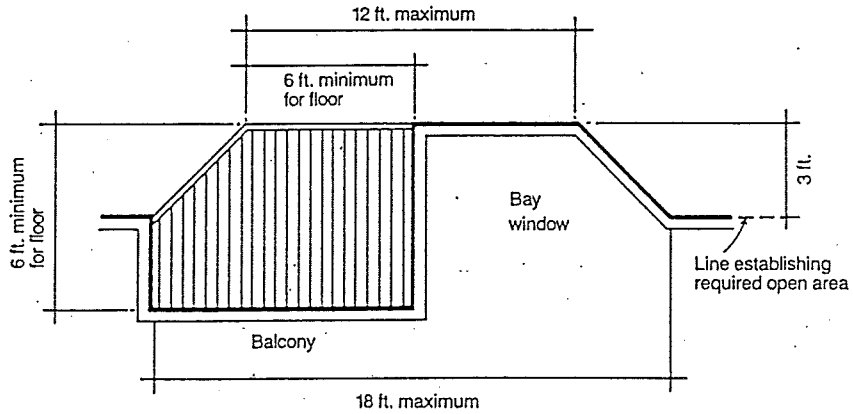

Figure 32-6

Figures 32-5 and 32-6 are Seattle amendments to the Uniform Building Code.

Section 155. Chapter 33 of the 1994 Uniform Building Code is amended as follows:

Chapter 33
SITE WORK, DEMOLITION AND CONSTRUCTION

Section 3301 — EXCAVATIONS AND FILLS

3301.1 General. Excavation or fills for buildings or structures shall be so constructed or protected that they do not endanger life or property.

Slopes for permanent fills shall not be steeper than 1 unit vertical in 2 units horizontal (50% slope). Cut slopes for permanent excavations shall not be steeper than 1 unit vertical in 2 units horizontal (50% slope) unless substantiating data justifying steeper cut slopes are submitted. Deviation from the foregoing limitations ((~~for cut slopes~~)) shall be permitted only upon the presentation of a soil investigation report acceptable to the building official.

No fill or other surcharge loads shall be placed adjacent to any building or structure unless such building or structure is capable of withstanding the additional loads caused by the fill or surcharge.

Existing footings or foundations which may be affected by any excavation shall be underpinned adequately or otherwise protected against settlement and shall be protected against lateral movement.

For footings on <u>or</u> adjacent <u>to</u> slopes, see Section 1806.4.

Fills to be used to support the foundations of any building or structure shall be placed in accordance with accepted engineering practice. A soil investigation report and a report of satisfactory placement of fill, both acceptable to the building official, shall be submitted.

((~~Where applicable (see Section 101.3), see Appendix Chapter 33 for excavation and grading.~~))

3301.2 Protection of Adjoining Property. <u>When the owner of a lot raises or lowers the level of the lot by a fill or excavation, he/she shall at his/her own expense protect all adjoining property from encroachment by such fill or excavation, or from danger of collapse due to excavation either by the erection of a retaining wall or by sloping the sides of the fill or excavation entirely within the confines of the lot in a manner found safe by the building official.</u>

((~~The requirements for protection of adjacent property and depth to which protection is required shall be as defined by prevailing law. Where not defined by law, the following shall apply: Any person making or causing an excavation to be made to a depth of 12 feet (3658 mm) or less below the grade shall protect the excavation so that the soil of adjoining property will not cave in or settle, but shall not be liable for the expense of underpinning or extending the foundation of buildings on adjoining properties when the excavation is not in excess of 12 feet (3658 mm) in depth. Before commencing the excavation, the person making or causing the excavation to be made shall notify in writing the owners of adjoining buildings not less than 10 days before such excavation is to be made that the excavation is to be made and that the adjoining buildings should be protected.~~

~~The owners of the adjoining properties shall be given access to the excavation for the purpose of protecting such adjoining buildings.~~

~~Any person making or causing an excavation to be made exceeding 12 feet (3658 mm) in depth below the grade shall protect the excavation so that the adjoining soil will not cave in or settle and shall extend the foundation of any adjoining buildings below the depth of 12 feet (3658 mm) below grade at the expense of the person causing or making the excavation. The owner of the adjoining buildings shall extend the foundation of these buildings to a depth of 12 feet (3658 mm) below grade at such owner's expense, as provided in the preceding paragraph.~~

~~Section 3302 — PREPARATION OF BUILDING SITE~~

~~All stumps and roots shall be removed from the soil to a depth of at least 12 inches (305 mm) below the surface of the ground in the area to be occupied by the building.~~

~~All wood forms which have been used in placing concrete, if within the ground or between foundation sills and the ground, shall be removed before a building is occupied or used for any purpose. Before completion, loose or casual wood shall be removed from direct contact with the ground under the building.~~))

Section 3302 — DEMOLITIONS

The demolition of any building or structure shall conform to the following provisions:

1. All asbestos material shall be removed prior to demolition, in accordance with regulations of the Environmental Protection Agency and the Puget Sound Air Pollution Control Agency.

2. All utilities shall be disconnected prior to demolition or during the demolition process in accordance with requirements of the governing utility including, but not limited to, the Seattle Engineering Department, Water Department, Fire Department, City Light, Washington Natural Gas Company, and U.S. West Communications.

3. Removal of combustible waste and welding and cutting shall be performed in accordance with the Fire Code.

4. During demolition, streets and sidewalks shall be left clean at the end of each day's operation.

5. Provision shall be made to stabilize ground conditions to eliminate dust and erosion.

6. All concrete or masonry floors, foundations, footings, basement walls and retaining walls not to be reused shall be removed to 18 inches below final grade. All concrete floors left in place shall be broken so as to allow water to drain through unless the floors are to be used.

7. If the demolition results in a change of drainage patterns, provision shall be made to assure that the flow of all water courses, including streams, ditches, drains, combined sewers, and runoff, intercepted during the progress of the work, are returned to the condition present before the demolition or as specified on the permit.

8. The site shall be left level and free of debris upon completion of the demolition, and all holes shall be filled or protected with secure fences. Holes may be filled with concrete, rocks or other non-decaying material no larger than 12 inches in diameter. Wood and other organic material may not be buried on the site.

Leaving the site level means:

8.1 The grade conforms to that existing on all sides;

8.2 Surface water will drain off;

8.3 Surface is smooth; and

8.4 Broken sections of the foundation or other material are not exposed.

9. The site shall be seeded upon completion of the demolition if it is to be left vacant for more than six months.

10. The building official may require a structural engineer's analysis of proposed demolitions or any portions of a structure remaining after demolition.

11. When demolition occurs, all underground tanks on the site shall either be removed or filled, as required in Section 7902 of the Fire Code.

Section 3303 — PROTECTION OF PEDESTRIANS DURING CONSTRUCTION OR DEMOLITION

3303.1 General. The protection of the public and of the sidewalks, streets and other public property during construction or demolition shall be provided as required by Title 15, Seattle Municipal Code, Street and Sidewalk Use.

((~~No person shall use or occupy a street, alley or public sidewalk for the performance of work under a building permit except in accordance with the provisions of this chapter.~~

~~No person shall perform any work on any building or structure adjacent to a public way in general use by the public for pedestrian travel, unless the pedestrians are protected as specified in this chapter.~~

~~Any material or structure temporarily occupying public property, including fences and walkways, shall be adequately lighted between sunset and sunrise.~~

~~For additional requirements for temporary buildings or structures, see Section 3103.~~

~~**3303.2 Temporary Use of Streets and Alleys.** The use of public property shall meet the requirements of the public agency having jurisdiction. Whenever requested, plot plans and construction details shall be submitted for review by the agencies concerned.~~

~~**3303.3 Storage on Public Property.** Material and equipment necessary for work to be done under a permit shall not be placed or stored on public property so as to obstruct free and convenient approach to and use of any fire hydrant, fire or police alarm box, utility box, catch basin or manhole or so as to interfere with the free flow of water in any street or alley gutter.~~

~~**3303.4 Mixing Mortar on Public Property.** The mixing or handling of mortar, concrete or other material on public property shall be done in a manner that will not deface public property or create a nuisance.~~

~~**3303.5 Protection of Utilities.** A substantial protective frame and boarding shall be built around and over every street lamp, utility box, fire or police alarm box, fire hydrant, catch basin and manhole that may be damaged by any work being done under the permit. This protection shall be maintained while such work is being done and shall not obstruct the normal functioning of the device.~~

~~**3303.6 Walkway.** A walkway not less than 4 feet (1219 mm) wide shall be maintained on the sidewalk in front of the building site during construction, alteration or demolition unless the public agency having jurisdiction authorizes the sidewalk to be fenced and closed. Adequate signs and railings shall be provided to direct pedestrian traffic. Railings shall be provided when required by Section 3303.7.~~

~~The walkway shall be capable of supporting a uniform live load of 150 pounds per square foot (psf) (7.18 kN/m^2). A durable wearing surface shall be provided.~~

~~**3303.7 Pedestrian Protection.**~~

~~**3303.7.1 Protection required.** Pedestrian traffic shall be protected by a railing on the street side when the walkway extends into the roadway, by a railing adjacent to excavations and by such other protection as set forth in Table 33-A. The construction of such protective devices shall be in accordance with the provisions of this chapter.~~

~~**3303.7.2 Railings.** Railings shall be substantially built and, when of wood, shall be constructed of new material having a nominal size of at least 2 inches by 4 inches (51 mm by 102 mm). Railings shall be at least 3 feet 6 inches (1067 mm) in height and when adjacent to excavations shall be provided with a midrail.~~

~~**3303.7.3 Fences.** Fences shall be solid and substantially built, be not less than 8 feet (2438 mm) in height above grade and be placed on the side of the walkway nearest to the building site. Fences shall extend the entire length of the building site and each end shall be returned to the building line.~~

~~Openings in such fences shall be protected by doors which normally are kept closed.~~

~~All fences shall be provided with 2-inch by 4-inch (51 mm by 102 mm) plate, top and bottom, and shall be well braced. The fence material shall be a minimum of $^{3}/_{4}$-inch (19 mm) boards or $^{1}/_{4}$-inch (6.4 mm) plywood. Plywood fences shall conform to the following requirements:~~

~~1. Plywood panels shall be bonded with an adhesive identical to that for exterior plywood.~~

~~2. Plywood $^{1}/_{4}$-inch (6.4 mm) or $^{5}/_{16}$-inch (7.9 mm) in thickness shall have studs spaced not more than 2 feet (610 mm) on center.~~

~~3. Plywood $^{3}/_{8}$-inch (9.5 mm) or $^{1}/_{2}$-inch (12.7 mm) in thickness shall have studs spaced not more than 4 feet (1219 mm) on center, provided a 2-inch by 4-inch (51 mm by 102 mm) stiffener is placed horizontally at the midheight when the stud spacing exceeds 2 feet (610 mm) on center.~~

~~4. Plywood $^{5}/_{8}$-inch (15.9 mm) or thicker shall not span over 8 feet (2438 mm).~~

~~**3303.7.4 Canopies.** The protective canopy shall have a clear height of 8 feet (2438 mm) above the walkway. The roof shall be tightly sheathed. The sheathing shall be 2-inch (51 mm) nominal wood planking or equal. Every canopy shall have a solid fence built along its entire length on the construction side.~~

~~If materials are stored or work is done on the roof of the canopy, the street sides and ends of the canopy roof shall be protected by a tight curb board not less than 1 foot (305 mm) high and a railing not less than 3 feet 6 inches (1067 mm) high.~~

~~The entire structure shall be designed to carry the loads to be imposed on it, provided the live load shall not be less than 150 psf (7.18 kN/m^2). In lieu of such design a protection canopy supporting not more than 150 psf (7.18 kN/m^2) may be constructed as follows:~~

~~1. Footings shall be continuous 2-inch by 6-inch (51 mm by 152 mm) members with scabbed joints.~~

~~2. Posts not less than 4 inches by 6 inches (102 mm by 152 mm) in size shall be provided on both sides of the canopy and spaced not more than 12 feet (3658 mm), center to center.~~

~~3. Stringers not less than 4 inches by 12 inches (102 mm by 305 mm) in size shall be placed on edge upon the posts.~~

~~4. Joists resting upon the stringers shall be at least 2 inches by 8 inches (51 mm by 305 mm) in size and shall be spaced not more than 2 feet (610 m), center to center.~~

~~5. The deck shall be of planks at least 2 inches (51 mm) thick nailed to the joists.~~

~~6. Each post shall be knee-braced to joists and stringers by members 4 feet (1219 mm) long, not less than 2 inches by 4 inches (51 mm by 102 mm) in size.~~

~~7. A curb not less than 2 inches by 12 inches (51 mm by 305 mm) in size shall be set on edge along the outside edge of the deck.~~

~~**EXCEPTION:** Protection canopies for new, light-frame construction not exceeding two stories in height may be designed for a live load of 75 psf (3.59 kN/m^2) or the loads to be imposed on it, whichever is the greater.~~

~~**3303.8 Maintenance and Removal of Protective Devices.**~~

~~**3303.8.1 Maintenance.** Pedestrian protection required by Section 3303.7 shall be maintained in place and kept in good order for the entire length of time pedestrians may be endangered.~~

~~**3303.8.2 Removal.** Every protection fence or canopy shall be removed within 30 days after such protection is no longer required by this chapter for protection of pedestrians.~~

~~**3303.9 Demolition.** The work of demolishing any building shall not be commenced until the required pedestrian protection structures are in place.~~

~~The building official may require the permittee to submit plans and a complete schedule for demolition. Where such are required, no work shall be done until such plans or schedule, or both, are approved by the building official.~~))

Section156. The 1994 Uniform Building Code is amended by deleting Table 33-A.

Section157. The 1994 Uniform Building Code is amended by adding Chapter 34 as follows:

Chapter 34
EXISTING STRUCTURES

SECTION 3401--GENERAL

Buildings in existence at the time of the passage of this building code which were legally constructed and occupied in accordance with the provisions of a prior code may have their existing occupancy continued, provided such occupancy is not hazardous.

Any change in the occupancy or character of occupancy of any existing building, structure or portion thereof shall comply with the provisions of Section 109 and Section 3405.

In order to legalize an existing occupancy for the record, it is required that the building comply with the fire and life safety requirements of this building code or the effective code at the time the building was constructed. If the existing occupancy or character of occupancy is other than that for which the building was constructed, the building shall comply with this building code or the effective code at the time the existing occupancy was legally established.

SECTION 3402 -- MAINTENANCE

3402.1 General. All buildings or structures, both existing and new, and all parts thereof shall be maintained in a safe and sanitary condition. All devices or safeguards which are or were required by a code in effect when the building or structure was erected, altered, or repaired shall be maintained in good working order. The owner or a designated agent shall be responsible for such maintenance of buildings and structures.

The means of exit, fire escapes, sprinkler systems, standpipes, occupancy or area separations, fire doors, construction for segregating dangerous uses and all other parts of the building or equipment thereof which are intended to assist in the extinguishing of fire, or to prevent the origin or spread of fire or to safeguard life or property from fire, shall be maintained in a usable and safe condition. It shall be unlawful to fail to so maintain these parts of the building or equipment or to fail to immediately comply with any lawful notice or order of the fire chief or the building official.

EXCEPTIONS: 1. The building official may modify the requirements of this subsection where all or a portion of a building is unoccupied, closed off and reasonably secure from unlawful entry.

2. Occupants of Group R, Division 1 apartments, and Group R, Division 3 dwellings shall be responsible for the maintenance of smoke detectors required by Section 310.9.

3402.2 Unsafe Building Appendages. Parapet walls, cornices, spires, towers, tanks, statuary and other appendages or structural members which are supported by, attached to, or a part of a building and which are in a deteriorated condition or are otherwise unable to sustain the design loads which are specified in this building code, are hereby designated as unsafe building appendages. All such unsafe building appendages are public nuisances and shall be abated in accordance with Section 102 of this building code.

3402.3 Central Waterfront Piers. All piers located between West Harrison Street and South Massachusetts Street, both existing and new, and all portions thereof shall be maintained in a safe condition capable of supporting the design loads as specified in this code. See also Section 413.

SECTION 3403--ADDITIONS, ALTERATIONS OR REPAIRS

3403.1 General. Buildings and structures to which additions, alterations or repairs are made shall comply with all the requirements of this code for new facilities except as specifically provided in this section. See Section 310.9 for provisions requiring installation of smoke detectors in existing Group R, Division 3 Occupancies. See also applicable provisions of the Seattle Energy Code.

3403.2 When Allowed. Additions, alterations or repairs may be made to any building or structure without requiring the existing building or structure to comply with all the requirements of this code, provided the addition, alteration or repair conforms to that required for a new building or structure.

EXCEPTION: Alterations of existing structural elements, or additions of new structural elements, which are not required by Section 3403.10 and which are initiated for the purpose of increasing the lateral-force-resisting strength or stiffness of an existing structure need not be designed for forces conforming to these regulations provided that an engineering analysis is submitted to show that:

1. The capacity of existing structural elements required to resist forces is not reduced, and
2. The lateral loading to required existing structural elements is not increased beyond their capacity, and
3. New structural elements are detailed and connected to the existing structural elements as required by this code, and
4. New or relocated nonstructural elements are detailed and connected to existing or new structural elements as required by this code, and
5. An unsafe condition as defined in Section 102 is not created.

Any building plus new additions shall not exceed the height, number of stories and area specified for new buildings.

EXCEPTION: An addition to an existing nonconforming building may exceed the limitations of the preceding paragraph if an area separation wall is provided, the existing building is not made more nonconforming, and the addition conforms to this code.

3403.3 Impracticality. In cases where total compliance with all the requirements of this code is impractical, the applicant may arrange a pre-design conference with the design team and the building official. The applicant shall identify design solutions and modifications which conform to Section 104.14. The building official may waive specific requirements in this code which he/she has determined to be impractical.

3403.4 Compliance with Retroactive Ordinances. Alterations and repairs to existing buildings which are being made in response to a notice or order requiring compliance with the Housing and Building Maintenance Code, Subtitle II, Title 22 of the Seattle Municipal Code, Fire Code or other ordinances applicable to existing buildings, shall be permitted to be made in accordance with the standards contained in those ordinances, rather than the standards for new buildings contained in this building code. Where standards are not specified in those ordinances, such alterations or repairs must conform to the requirements of this chapter of the building code.

3403.5 Damaged Buildings. When a building is damaged, by fire or other means, in excess of 60 percent of its value, as determined by the assessed value per King County records or an appraised value made by a recognized appraisal agency approved by the building official, the entire building, when repaired, shall conform to the requirements of this building code.

3403.6 Non-structural Alterations or Repairs. Alterations or repairs which are non-structural and do not affect any member or part of the building or structure having required fire-resistance may be made with the same materials of which the building or structure is constructed, provided that no change shall be permitted which increases its hazard.

3403.7 Maintenance of Structural Stability. When approved by the building official, minor structural alterations or repairs necessary to maintain the structural stability of the building may be made with the same material of which the building or structure is constructed.

3403.8 Historic Buildings and Structures. The building official may modify the specific requirements of this building code as it applies to buildings and structures designated as landmarks of historical or cultural importance and require in lieu thereof alternate requirements which, in the opinion of the building official, will result in a reasonable degree of safety to the public and the occupants of those buildings.

A historic building or structure is one which has been designated for preservation by the City Council or the State of Washington, has been listed, or has been determined eligible to be listed, on the National Register of Historic Places, has been officially nominated for such status, or is a structure contributing to the character of a designated landmark or historic district.

3403.9 Radon-resistive Construction Requirements. The radon-resistive construction requirements found in Chapter 3 shall apply to all Group R buildings to which either an addition or substantial alteration is made except where the basement, foundation or crawl space is not being altered or expanded.

3403.10 Substantial Alterations or Repairs.

3403.10.1 General. Any building or structure to which additions, or substantial alterations or repairs are made shall be required to conform only with the requirements of this Section and Sections 403 (high rise buildings, when applicable), 511 (special requirements for the Fire District, when applicable), and Chapters 7, 8, 9 and 10 for new buildings or structures.

3403.10.2 Definition. For the purpose of this section, substantial alterations or repairs may mean any one of the following and as determined by the building official:

1. Extensive structural repair.

2. Remodeling to substantially extend the useful physical and/or economic life of the building or significant portion of the building, such as remodeling a complete floor other than typical office tenant remodeling.

3. A change in occupancy that is more hazardous than the existing occupancy, based on life and fire risk. See-Table 34-A. A change of tenant does not necessarily constitute a change of occupancy.

4. Reoccupancy of a building that has been substantially vacant for more than 12 months.

3403.10.3 Seismic Regulations. The provisions of Division III of Chapter 16, Earthquake Regulations, shall apply to all buildings or structures to which additions, alterations or repairs are made, except as follows:

1. Where alterations or repairs are made to buildings constructed prior to July 26, 1967, such buildings need comply only with earthquake-resistive requirements as specified in Section 1630, except that in lieu of the requirements set forth in Section 1631.2.9, the building official may accept an opinion submitted by a licensed structural engineer that the existing floors, walls, roof and other resisting elements, when interconnected to provide sufficient transfer of stresses, are able to withstand lateral seismic forces at least equal to those experienced in the seismic disturbance in Seattle on April 13, 1949.

2. The building official may waive requirements of Section 1630 when it can be demonstrated to his/her satisfaction that there is sufficient strength and safety in the existing construction to resist the lateral forces at least equal to those experienced in the seismic disturbance in Seattle on April 13, 1949, provided the requirements of Section 1631 are met.

3. The building official may further require, as he/she deems necessary, comprehensive report by a licensed structural engineer of an investigation and structural analysis of the building for the purpose of determining conformance of the building to the structural requirements of this building code. This requirement shall also apply to Section 102 as conditions may require.

3403.10.4 Other Structural Work. All other structural work shall comply with the requirements of Chapters 15 through 23 and Sections 1403 and 2604.

SECTION 3404 -- MOVED BUILDINGS

Buildings or structures moved into or within the city shall comply with standards adopted by the building official. No building shall be moved into or within the city unless, prior to moving, the building official has inspected the building for compliance with this building code and the permit holder has agreed to correct all deficiencies found and has been issued a building permit for the work. A bond or cash deposit in an amount sufficient to abate or demolish the building shall be posted prior to issuance of a permit. See Section 106 for information required on plans. Any moved building that is not in complete compliance with standards for moved buildings within eighteen months from the date of permit issuance and is found to be a public nuisance may be abated.

SECTION 3405 -- CHANGE OF OCCUPANCY

Where there is a change of occupancy, all of the requirements of the chapter for the specific occupancy shall be satisfied.

Any change in the occupancy or character of occupancy of any existing building, structure or portion thereof shall comply with the provisions of this section, Section 308 and Section 502.

In addition to the requirements of Sections 310, 1203 and 2902, upon conversion of an existing building to residential occupancy, the elements of the dwelling unit envelope which are altered shall comply with the sound transmission control requirements of Section 1206.

See Section 3403.10 for additional requirements for substantial alterations.

Table 34-A
RATING OF OCCUPANCIES BY DEGREE OF HAZARD

CLASSIFICATION OF HAZARDS

A. Life hazard based on possible mortality due to occupancy, if fire occurs:

Minimum hazard	1
Minor hazard	2
Average hazard	3
Serious hazard	4
Maximum hazard	5

B. Fire hazard based on possible generating fire due to occupancy:

Noncombustible	1
Slow burning	2
Moderate burning	3
Free burning	4
Quick burning	5
Intense burning	6
Flash burning or explosive	7

Occupancy	Description	Life risk	Fire risk	Combined Life & Fire Risk
H-1	Occupancies with a quantity of material in the building in excess of those listed in Table No. 3-D which present a high explosion hazard as listed in Sec. 307.1.1	5	7	35
H-2	Occupancies where combustible dust is manufactured, used or generated in such a manner that concentrations and conditions create a fire or explosion potential; occupancies with a quantity of material in the building in excess of those listed in Table No. 3-D which present a moderate explosion hazard or a hazard from accelerated burning as listed in Sec. 307.1.1	4	7	28

Occupancy	Description	Life risk	Fire risk	Combined Life & Fire Risk
H-3	Occupancies where flammable solids, other than combustible dust, are manufactured, used or generated. Occupancies with a quantity of material in the building in excess of those listed in Table 9-A which present a high fire or physical hazard as listed in Sec. 307.1.1.	4	5	20
A-1	A building or portion of a building having an assembly room with an occupant load 1000 or more and a legitimate stage	4	4	16
A-2	A building or portion of a building having an assembly room with an occupant load of less than 1000 and a legitimate stage	4	4	16
A-2.1	Any building or portion of a building having an assembly room with an occupant load of 300 or more w/o a legitimate stage	4	4	16
I-3	Psychiatric hospitals where personal liberties of patients are restrained	5	3	15
I-1.1	Nurseries for the full-time care of children under the age of six (each accommodating more than 5 children), hospitals, psychiatric hospitals, nursing homes with nonambulatory patients	5	3	15
F-1	Woodworking establishments in excess of 3,000 sf	3	5	15
H-6	Semiconductor fabrication facilities and comparable research and development areas in which hazardous production materials are used and the aggregate quantity of materials is in excess of those listed in Table No. 3-D or 3-E.	2	7	14
E-1	Any building used for educational purposes through 12th grade by 50 or more persons for more than 12 hours per week or 4 hours in any one day	4	3	12
E-2	Any building used for educational purposes through 12th grade by less than 50 persons for more than 12 hours per week or 4 hours in any one day	4	3	12
E-3	Day care centers, preschools and day treatment centers	4	3	12
A-3	Any building or portion of a building having an assembly room with an occupant load of less than 300 w/o a legitimate stage.	3	4	12
I-2	Nursing homes for ambulatory patients	4	3	12

Occupancy	Description	Life risk	Fire risk	Combined Life & Fire Risk
I-1.2	Health-care centers for ambulatory patients receiving outpatient medical care which may render the patient incapable of unassisted self-preservation	4	3	12
M	Buildings, structures or portions thereof used for the display and sale of merchandise, and involving stocks of goods, wares or merchandise incidental to such purposes and accessible to the public.	3	4	12
H-5	Aircraft repair hangars not classified as Group S, Division 5 Occupancies; heliports	2	5	10
B	Eating & drinking establishments with an occupant load of less than 50	3	3	9
F-1	Moderate hazard factory and industrial occupancies which are not classified as Group F, Division 2 occupancies	3	3	9
R-1	Hotels; congregate residences (each accommodating more than 10 persons)	3	3	9
H-4	Repair garages and body shops not classified as Group S, Division 3.	2	4	8
S-3	Repair garages where work is limited to exchange of parts and maintenance requiring no open flame or welding; parking garages not classed as Group S, Division 4 open parking garages or Group U private garages	2	4	8
A-4	Stadiums, reviewing stands and amusement park structures not included within other Group A Occupancies	2	3	6
H-7	Occupancies having quantities of material in excess of those listed in Table No. 3-E that are health hazards as listed in Sec. 307.1.1.	2	3	6
I-3	Jails, prisons, reformatories and buildings where personal liberties of inmates are similarly restrained	3	2	6
S-4 & S-5	Open parking garages; boat moorages; aircraft hangars where work is limited to exchange of parts and maintenance requiring no open flame or welding; helistops.	2	3	6
R-1	Apartment houses, one or two dwelling units located in a mixed occupancy building	3	2	6
R-3	Lodging houses, detached one- and two-family dwellings, congregate residences (each accommodating 10 or fewer persons), family child day care homes.	3	2	6

Occupancy	Description	Life risk	Fire risk	Combined Life & Fire Risk
S-1	Moderate hazard storage occupancies used for storage of combustible materials that are not classified as a Group S, Division 2 or as a Group H occupancy	1	5	5
S-2	Power plants, pumping plants, ice plants	1	5	5
F-2	Low-hazard factory and industrial occupancies producing noncombustible or nonexplosive materials which, during finishing, packing or processing, do not involve a significant fire hazard	1	4	4
B	Buildings, structures or portions thereof used for office, professional or service-type transactions, including storage of records and accounts, fire and police stations, office buildings	2	2	4
B	Buildings or portions of buildings having rooms used for educational purposes beyond 12th grade	2	2	4
U-1	Private garages, carports, sheds and agricultural buildings	1	4	4
S-2	Low-hazard storage occupancies used for storage of noncombustible materials	1	3	3
U-2	Fences over 6 feet high, tanks and towers	1	1	1

Section158. The 1994 Uniform Building Code is amended by adding Appendix Chapter 4 as follows:

APPENDIX CHAPTER 4

Division II -- UTILITY TRANSFORMER VAULTS

This chapter is entirely Seattle amendments to the Uniform Building Code and is not underlined.

436.1 General

436.1.1 Scope. Vaults containing utility transformers or equipment will be required to comply with this appendix chapter and requirements of Seattle City Light.

436.1.2 Definition. Utility transformer vaults are those which contain transformer equipment owned by Seattle City Light or other electric power utility.

436.2 When Required. Transformer vaults shall be required for all utility transformers located inside a building. Seattle City Light shall approve the size, location, and layout of all utility vaults.

436.3 Access

436.3.1 General. At least one accessible opening, which may be a door or hatch, shall be provided to every vault. The opening shall be adequate in size to permit the installation and removal of the equipment located in the vault, and shall be kept unobstructed at all times. An unobstructed level area shall be provided at the entrance to all vaults. The level area shall be large enough to allow for removal of the transformer.

436.3.2 Access. Vaults shall be accessible to Seattle City Light personnel at all times. If it is necessary to pass through locked doors to reach a vault, keys to those doors shall be kept in a key box which can be opened with the key to the transformer vault. Persons other than Seattle City Light personnel shall not have access to utility transformer vaults.

436.4 Location. Vaults shall be located so that there is an equipment access path between the vault and the building exterior. The floor along the path shall be designed to support the weight of the transformer and other equipment. If a path is not provided, the building owner shall agree to remove the equipment to the right of way whenever the Superintendent of Seattle City Light determines it is necessary, and the owner shall pay all costs for removal and replacement. All doors between the vault and the building exterior shall be large enough for removal of transformers. See Section 414.7.3 for doorway requirements.

436.5 Size. The size of vaults shall be as determined by the Superintendent of Seattle City Light.

436.6 Construction. Floors, walls and ceilings of vaults shall have at least a three-hour fire-resistive rating and shall be constructed of solid concrete or concrete-filled concrete masonry units at least 6 inches (152 mm) thick. Vault floors shall be smooth with no pads and shall slope toward the vault sump. Seismic anchor inserts shall be embedded in the floor when required by the Superintendent of Seattle City Light.

436.7 Openings into Transformer Vaults

436.7.1 Protection of Openings. All doorways opening into a transformer vault from the building interior shall be protected by a fire assembly having a fire-protection rating equal to the fire-resistive rating required for the vault. Exterior openings, other than doors and ventilation openings, shall be protected by fire assemblies having a three-fourths-hour fire-protection rating when located below openings in another story or when located less than 10 feet (3048 mm) from other doors or windows of the same building.

436.7.2 Locks. All doors shall be equipped with locks and shall be kept locked. Doors to vaults shall be equipped with locks provided by the utility. Personnel doors shall be equipped with panic bars, pressure plates, or other devices that are normally latched but open under simple pressure.

436.7.3 Doorways. A removable curb 4 inches (102 mm) high, or as high as necessary to contain oil, shall be installed below each door. All doors shall be made of steel and shall swing out of the vault 180 degrees. Equipment access doorways to vaults containing single-phase transformers shall have clear openings at least 42 inches (1067 mm) wide and 6 feet 8 inches (2032 mm) high. Equipment access doorways for all other transformers shall be as specified by Seattle City Light. Doorways for personnel access shall have clear openings of at least 36 inches (914 mm) wide and 6 feet 8 inches (2032 mm) high.

436.8 Ventilation Systems

436.8.1 General. Ventilation systems shall be provided to dispose of heat from transformer total losses without creating a temperature rise which is in excess of the transformer rating.

436.8.2 Method of Ventilation. Ventilation for transformer vaults shall be provided by either natural circulation or mechanical circulation.

1. **Natural circulation.** All vaults containing up to three transformers of no more than 75 kVA each may be ventilated by natural circulation. The combined minimum net intake and exhaust area, exclusive of area occupied by screen, grating or louvers, shall not be less than 3 square inches (1935 mm^2) per kVA of transformer capacity. The total required area shall be divided roughly equally between intake and exhaust. In no case shall either intake or exhaust be less than 72 square inches (46 452 mm^2).

Roughly one-half the total area of required ventilation openings shall be in one or more openings in the lower one-half of the vault walls and roughly one-half shall be in one or more openings in the upper one-half of the exterior sidewalls or roof of the vault. Intake openings shall be located on the opposite side of the vault from exhaust openings. Intake openings shall not be located in the ceiling of the vault.

2. **Mechanical circulation.** Positive or negative pressure ventilation systems shall supply a minimum of 1.6 cfm (.76 L/s) of air per kVA of transformer capacity. The fans shall be installed outside of the vault and shall be controlled by a thermostat located inside the vault. The intake shall be located in the lower one-half of an exterior wall of the vault and the exhaust shall be in the roof or ceiling or in the upper one-half of the sidewalls of the vault. The ventilation system shall cause air to flow longitudinally across the transformers.

Forced air ventilation systems shall be designed by the applicant. The capacity and location of the ventilation system shall be approved by the Superintendent of Seattle City Light.

Power for the ventilation system shall be provided by the building owner.

436.8.3 Ventilation Openings and Duct Terminations. Ventilation openings and duct terminations shall comply with the following:

1. **Location of exhaust ventilation openings and exhaust duct terminations.** Unless otherwise approved by the building official, exhaust ventilation openings and duct terminations shall be located not less than 10 feet (3048 mm) from fire escapes, required exits, combustible materials and unprotected openings. Exhaust outlets shall be located on the exterior of the building.

2. **Covering.** Ventilation openings shall be covered with durable metal gratings, screens or louvers.

3. **Opening protection.** Intake ventilation openings in the vault walls on the interior of the building shall be protected by automatic closing fire dampers having a fire-resistance rating at least equal to that required for the vault. The actuating device on the fire damper should be made to function at a temperature of 165 degrees F.

4. **Ventilation ducts.** Exhaust ventilation ducts, if used, shall be enclosed in construction having a fire-resistance rating at least equal to that required for the vault. Exhaust ducts shall extend from the vault to the outside of the building. An exhaust duct for a mechanically ventilated vault shall be used exclusively for ventilating the vault.

436.8.4 Mechanical Circulation Temperature Control. A remote temperature controller shall be installed in the vault. The controller shall activate the fan when the temperature in the vault exceeds 70 degrees F., and shall turn the fan off when the temperature reaches 140 degrees F.

A visible or audible alarm shall be installed outside each vault that will be activated if the fan does not operate when the temperature controller calls for ventilation, or if the fan becomes inoperable. A sign shall be mounted near the alarm stating CALL SEATTLE CITY LIGHT WHEN ALARM SOUNDS or CALL SEATTLE CITY LIGHT WHEN LIGHT IS ON.

436.9 Drainage

436.9.1 General. Drains shall be prohibited in all transformer vaults.

436.9.2 Sumps. All transformer vaults shall have a dry sump. All sumps shall have an opening of at least 12 inches (304.8 mm) diameter with a removable metal grate that is flush with the floor. The sump shall be located near the personnel door, out of the entry path. The vault floor shall slope at least one inch in ten feet (25 mm in 305 mm) toward the sump.

Sumps shall have a capacity of at least 8 cubic feet (.23 m^3) or as specified by the utility. Sumps shall have minimum dimensions of 12 inches (305 mm) diameter and 12 inches (305 mm) depth. The sump shall have a grouted bottom. It shall be located within reach of the personnel door and shall not be located in the path for moving transformers in and out of the vault.

436.10 Pipes and Ducts. No pipes or ducts foreign to the electrical installation shall enter or pass through any transformer vault. Piping or other facilities provided for fire protection inside the vault or for transformer cooling are deemed not to be foreign to the electrical installation.

436.11 Storage In Transformer Vaults. No material may be stored in any transformer vault.

Section 159. The Director of the Department of Construction and Land Use shall for a period of 60 days following the effective date of this ordinance, accept applications for permits which comply with ordinance 116012 as amended by ordinances 116655 and 117573 in lieu of this ordinance.

Section160. This ordinance shall take effect and be in force thirty (30) days from and after its approval by the Mayor, but if not approved and returned by the Mayor within ten (10) days after presentation, it shall take effect as provided by Municipal Code Section 1.04.020.

Passed by the City Council the 24th day of July, 1995, and signed by me in open session in authentication of its passage this 24th day of July, 1995.

Tom Nist
President of the City Council
Pro Tem

Approved by me this 26 day of July, 1995.

Norman B. Rice
Norman B. Rice, Mayor

Filed by me this 27th day of July, 1995.

Judith E. Pippin
City Clerk

(SEAL)

CS 19.2