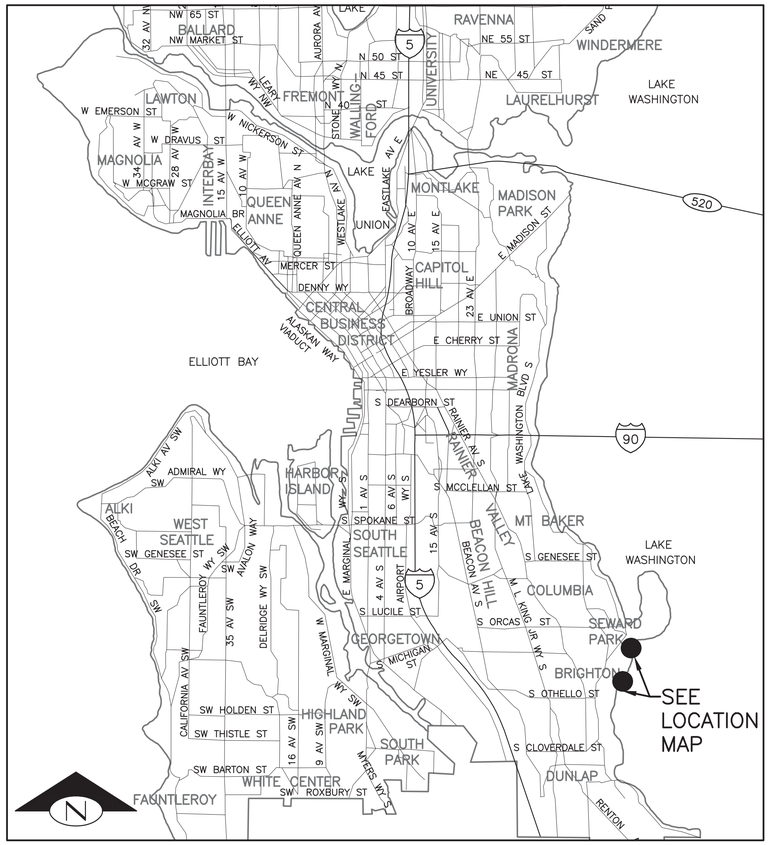

VICINITY MAP
SCALE: 1" = 1 MILE

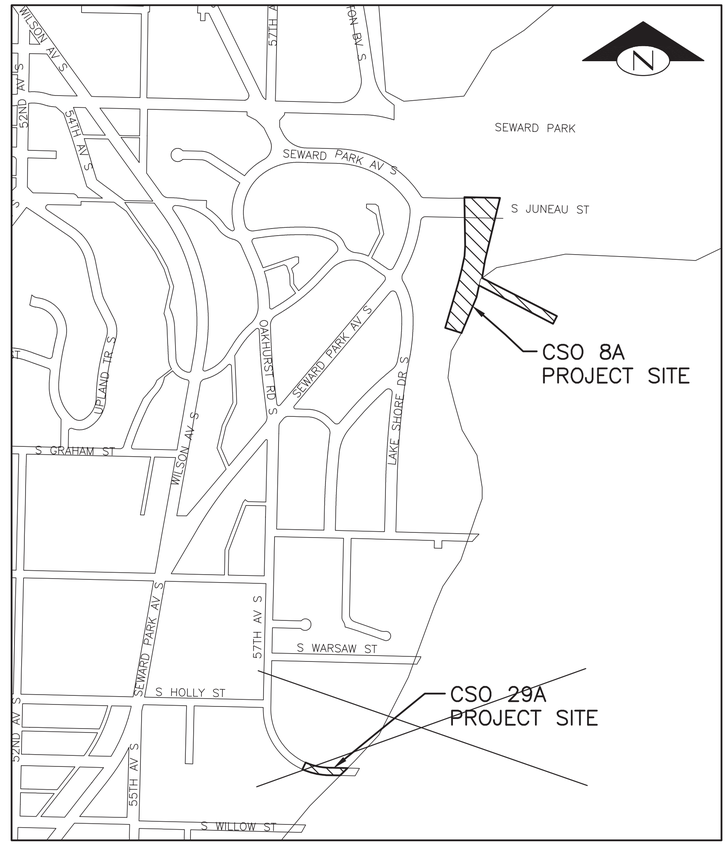

LOCATION MAP
SCALE: 1" = 400'

ADDRESS OF PROPERTY:

5895 LAKE WASHINGTON BOULEVARD S.
(SEWARD PARK)

OWNER:
SEATTLE PARKS AND RECREATION
800 MAYNARD AVENUE S.
SEATTLE, WA 98134

OWNERS AGENT:
SEATTLE PUBLIC UTILITIES
700 FIFTH AVENUE, SUITE 4900
SEATTLE, WA 98124-4018

LEGAL DESCRIPTION:

GL 1 & 2 & SH LDS ADJ IN NE 1/4 SEC 23-24-04 ALL GL 3 & 4 & E 1024 FT GL 5 & SH LDS ADJ IN SE 1/4 SEC 23-24-04 GL 3 & SH LDS ADJ IN SE 1/4 SEC 14-24-04 GL 3 & SH LDS ADJ IN SW 1/4 SEC 24-24-04 & GL 1 & 2 & SH LDS ADJ IN NW 1/4 SEC 24-24-04 1/4 SEC 24-24-04 TGW POR NW 1/4 & SW 1/4 SEC 23-24-04 LY NELY OF LK WASH BOULEVARD S

ASSESSORS PARCEL NO: 2324049007

ZONING: SF 9600

NOTE:

PLANS ONLY SUPPORT PERMITTING FOR CSO FACILITY 8A.
CSO FACILITY 29A WILL BE PERMITTED SEPARATELY

DPD PROJECT # 3015640

DETAIL AND SECTION REFERENCING

4/9 — DETAIL REFERENCE NUMBER
SHEET ON WHICH DETAIL APPEARS

(TITLE) (SCALE) 4/9 — DETAIL REFERENCE NUMBER
SHEET ON WHICH DETAIL WAS TAKEN

("TYP" SPECIFIES THAT DETAIL IS UNIFORMLY TYPICAL THROUGHOUT PROJECT EXCEPT WHERE OTHERWISE NOTED.)
("VAR" SPECIFIES THAT DETAIL IS CALLED ON SEVERAL SHEETS.)

A — A32 — SECTION A-A IS SHOWN ON SHEET 32.

SECTION A-A 30 — SECTION A-A IS TAKEN ON SHEET 30.

MUP SUBMITTAL - RESPONSE TO CORRECTION NOTICE #1

VICINITY MAP, LOCATION MAP, DETAIL AND SECTION REFERENCING AND DATUM

VAULT SERIAL NO.	DATE	MARK	NATURE REVISIONS	MADE	CHK'D	REV'D

HDR Engineering, Inc. | CH2MHILL

REVIEWED BY SPU/WATER ENGINEERING ..... 20.....
REVIEWED BY SPU/DRAINAGE ..... 20.....
APPROVED BY SDOT STREET IMPROVEMENT PERMITTING ..... 20.....

APPROVED FOR ADVERTISING
NANCY LOCKE
DEPARTMENT OF FINANCE & ADMINISTRATIVE SERVICES
SEATTLE, WASHINGTON 20
BY:
PURCHASING & CONTRACTING SERVICES DIRECTOR

NAME OR INITIALS AND DATE	INITIALS AND DATE
DESIGNED XD-10/25/13	REVIEWED: DES. CONST. SDOT PROJ. MGR.
CHECKED BOB-11/01/13	
DRAWN PCW-10/25/13	RECEIVED
CHECKED BOB-11/01/13	REVISED AS BUILT

ALL WORK SHALL BE DONE IN ACCORDANCE WITH THE CITY OF SEATTLE STANDARD PLANS AND SPECIFICATIONS AND OTHER DOCUMENTS CALLED FOR IN SECTION 0-02.3 OF THE PROJECT MANUAL.

ERIC C.M. BERGSTROM — STATE OF WASHINGTON — 27347 — REGISTERED PROFESSIONAL ENGINEER

Seattle Public Utilities
City of Seattle
Ray Hoffman, Director
ORDINANCE NO. APPROVED
FUND:
SCALE: AS NOTED INSPECTOR'S BOOK

HENDERSON NORTH CSO REDUCTION

JOB NO. PC C304102 R/W CO C304102
VAULT PLAN NO.
SHEET 001 OF 320

C:\pwworking\sea\d0863917\001 C304102-P-Cover-G001.dwg
pellheim Dec-03-13 10:46am

SHEET INDEX

NO.	DESCRIPTION
	GENERAL
001	VICINITY MAP, LOCATION MAP, DETAIL AND SECTION REFERENCING AND DATUM
002	SHEET INDEX–SHEET 1 OF 2
003	SHEET INDEX–SHEET 2 OF 2
	CSO FACILITY 8A GENERAL
004	CSO FACILITY 8A AND CSO FACILITY 29A–GENERAL NOTES–SHEET 1 OF 2
005	CSO FACILITY 8A AND CSO FACILITY 29A–GENERAL NOTES–SHEET 2 OF 2
006	CSO FACILITY 8A AND CSO FACILITY 29A–STANDARD ABBREVIATIONS
~~008~~	~~CSO FACILITY 8A–STATEMENT OF SPECIAL INSPECTION–SHEET 1 OF 2~~
~~009~~	~~CSO FACILITY 8A–STATEMENT OF SPECIAL INSPECTION–SHEET 2 OF 2~~
~~010~~	~~CSO FACILITY 8A AND CSO FACILITY 29A–HYDRAULIC SCHEMATIC~~
~~011~~	~~CSO FACILITY 8A AND CSO FACILITY 29A–HYDRAULIC PROFILE~~
~~012~~	~~CSO FACILITY 8A–SURVEY CONTROL PLAN~~
~~012A~~	~~CSO FACILITY 8A–EXISTING SURVEY–SOUTH JUNEAU ST–AREA A~~
~~012B~~	~~CSO FACILITY 8A–EXISTING SURVEY–PARKING AND NORTH TENNIS COURT–AREA B~~
~~012C~~	~~CSO FACILITY 8A–EXISTING SURVEY–SOUTH TENNIS COURT–AREA C~~
~~012D~~	~~CSO FACILITY 29A–SURVEY CONTROL PLAN~~
~~012E~~	~~CSO FACILITY 29A–EXISTING SURVEY–57TH STREET SOUTH~~
	CSO FACILITY 8A CIVIL
013	CSO FACILITY 8A–SITE PLAN & LEGEND
014	CSO FACILITY 8A–EROSION CONTROL NOTES
015A	CSO FACILTIY 8A–TESC PLAN–SHEET 1 OF 3
015B	CSO FACILTIY 8A–TESC PLAN–SHEET 2 OF 3
015C	CSO FACILITY 8A–TESC PLAN–SHEET 3 OF 3
016	CSO FACILITY 8A–TESC DETAILS AND SECTIONS
~~016A~~	~~CSO FACILITY 8A–PIPING DEMOLITION PLAN–SHEET 1 OF 2~~
~~017~~	~~CSO FACILITY 8A–PIPING DEMOLITION PLAN–SHEET 2 OF 2~~
017A	CSO FACILITY 8A–SITE PREPARATION, DEMOLITION AND PAVEMENT REMOVAL–SHEET 1 OF 3
017B	CSO FACILITY 8A–SITE PREPARATION, DEMOLITION AND PAVEMENT REMOVAL–SHEET 2 OF 3
017C	CSO FACILITY 8A–SITE PREPARATION, DEMOLITION AND PAVEMENT REMOVAL–SHEET 3 OF 3
018A	CSO FACILITY 8A–PAVING PLAN–SHEET 1 OF 3
018B	CSO FACILITY 8A–PAVING PLAN–SHEET 2 OF 3
018C	CSO FACILITY 8A–PAVING PLAN–SHEET 3 OF 3
019B	CSO FACILITY 8A–GRADING PLAN–SHEET 1 OF 2
019C	CSO FACILITY 8A–GRADING PLAN–SHEET 2 OF 2
019D	CSO FACILITY 8A–SITE SECTIONS & DETAILS
020	CSO FACILITY 8A–SITE DETAILS–SHEET 1 OF 2
020A	CSO FACILITY 8A–SITE DETAILS–SHEET 2 OF 2
~~021B~~	~~CSO FACILITY 8A–SITE EXTERIOR PIPING PLAN–SHEET 1 OF 2~~
~~021C~~	~~CSO FACILITY 8A–SITE EXTERIOR PIPING PLAN–SHEET 2 OF 2~~
~~021D~~	~~CSO FACILITY 8A–SITE EXTERIOR PIPING PROFILES – SHEET 1 OF 3~~
~~021E~~	~~CSO FACILITY 8A–SITE EXTERIOR PIPING PROFILES – SHEET 2 OF 3~~
~~021F~~	~~CSO FACILITY 8A–SITE EXTERIOR PIPING PROFILES – SHEET 3 OF 3~~
022	CSO FACILITY 8A–SITE DRAINAGE PLAN–SHEET 1 OF 2
022A	CSO FACILITY 8A–SITE DRAINAGE PLAN–SHEET 2 OF 2
023	CSO FACILITY 8A–DRAINAGE PROFILE
024	CSO FACILITY 8A–SITE DRAINAGE DETAILS–SHEET 1 OF 2
~~025~~	~~CSO FACILITY 8A–SITE DRAINAGE DETAILS–SHEET 2 OF 2~~
~~027~~	~~CSO FACILITY 8A–SITE SECTIONS AND DETAIL~~
~~028~~	~~CSO FACILITY 8A–SEWER DIVERSION PLAN AND PROFILE~~
~~029~~	~~CSO FACILITY 8A–INFLUENT SEWER AND DISCHARGE PLAN AND PROFILE~~
~~032~~	~~CSO FACILITY 8A–INFLUENT CONTROL STRUCTURE PLAN AND SECTIONS~~
~~032A~~	~~CSO FACILITY 8A–EFFLUENT CONTROL STRUCTURE PLAN AND SECTIONS~~
~~032B~~	~~CSO FACILITY 8A–SEWER DIVERSION DETAILS~~
~~033~~	~~CSO FACILITY 8A–PARKS PUMP STATION FORCEMAIN PLAN AND PROFILE~~
034	CSO FACILITY 8A–WATER SERVICE PLAN AND PROFILE
036	CSO FACILITY 8A–OUTFALL PLAN AND PROFILE
~~037~~	~~CSO FACILITY 8A–TEMPORARY OUTFALL AND DETAILS~~
038	CSO FACILITY 8A–OUTFALL SECTIONS
039	CSO FACILITY 8A–OUTFALL ANCHOR DETAILS
040	CSO FACILITY 8A–OUTFALL TERMINUS DETAILS

SHEET INDEX

NO.	DESCRIPTION
041	CSO FACILITY 8A–WOOD STAVE OUTFALL PIPE REMOVAL
~~042~~	~~CSO FACILITY 8A–JUNEAU TESC~~
043	CSO FACILITY 8A–JUNEAU STREET IMPROVEMENT PLAN
044	CSO FACILITY 8A–SHORELINE ENHANCEMENT PLAN
046	CSO FACILITY 8A–SHORELINE ENHANCEMENT SECTIONS
	CSO FACILITY 8A LANDSCAPING
048	CSO FACILITY 8A–PLANTING PLAN OVERVIEW
048A	CSO FACILITY 8A–PLANTING PLAN–SHEET 1 OF 3
049	CSO FACILITY 8A–PLANTING PLAN–SHEET 2 OF 3
050	CSO FACILITY 8A–PLANTING PLAN–SHEET 3 OF 3
051	CSO FACILITY 8A–PLANTING SCHEDULE
052	CSO FACILITY 8A–PLANTING DETAILS–SHEET 1 OF 2
053	CSO FACILITY 8A–PLANTING DETAILS–SHEET 2 OF 2
054	CSO FACILITY 8A–IRRIGATION PLAN OVERVIEW
055	CSO FACILITY 8A–IRRIGATION PLAN–SHEET 1 OF 2
056	CSO FACILITY 8A–IRRIGATION PLAN–SHEET 2 OF 2
057	CSO FACILITY 8A–IRRIGATION SCHEDULE
~~058~~	~~CSO FACILITY 8A–IRRIGATION DETAILS–SHEET 1 OF 2~~
~~059~~	~~CSO FACILITY 8A–IRRIGATION DETAILS–SHEET 2 OF 2~~
	CSO FACILITY 8A ARCHITECTURAL
063	CSO FACILITY 8A–ARCHITECTURAL PLAN AND CODE INFORMATION
	CSO FACILITY 8A STRUCTURAL
~~064~~	~~CSO FACILITY 8A–STRUCTURAL GENERAL NOTES–SHEET 1 OF 2~~
~~065~~	~~CSO FACILITY 8A–STRUCTURAL GENERAL NOTES–SHEET 2 OF 2~~
~~066~~	~~CSO FACILITY 8A–STRUCTURAL STANDARD DETAILS–CONCRETE–SHEET 1 OF 3~~
~~067~~	~~CSO FACILITY 8A–STRUCTURAL STANDARD DETAILS–CONCRETE–SHEET 2 OF 3~~
~~068~~	~~CSO FACILITY 8A–STRUCTURAL STANDARD DETAILS–CONCRETE–SHEET 3 OF 3~~
~~069~~	~~CSO FACILITY 8A–STRUCTURAL STANDARD DETAILS–BEAM AND COLUMN DETAILS AND SCHEDULE~~
~~070~~	~~CSO FACILITY 8A–STRUCTURAL STANDARD DETAILS–FABRICATED METALWORK~~
071	CSO FACILITY 8A–STRUCTURAL OVERALL PLANS
072	CSO FACILITY 8A–STRUCTURAL OVERALL SECTIONS
~~073~~	~~CSO FACILITY 8A–STRUCTURAL FOUNDATION PLAN–AREA A~~
~~074~~	~~CSO FACILITY 8A–STRUCTURAL FOUNDATION PLAN–AREA B~~
~~075~~	~~CSO FACILITY 8A–STRUCTURAL FOUNDATION PLAN–AREA C~~
~~076~~	~~CSO FACILITY 8A–STRUCTURAL ROOF PLAN–AREA A~~
~~077~~	~~CSO FACILITY 8A–STRUCTURAL ROOF PLAN–AREA B~~
~~078~~	~~CSO FACILITY 8A–STRUCTURAL ROOF PLAN–AREA C~~
~~079~~	~~CSO FACILITY 8A–STRUCTURAL FACILITIES VAULT FOUNDATION PLAN~~
~~080~~	~~CSO FACILITY 8A–STRUCTURAL FACILITIES VAULT ROOF PLAN~~
~~081~~	~~CSO FACILITY 8A–STRUCTURAL SECTIONS–AREA A~~
~~082~~	~~CSO FACILITY 8A–STRUCTURAL SECTIONS–AREA B~~
~~083~~	~~CSO FACILITY 8A–STRUCTURAL SECTIONS–AREA C~~
~~084~~	~~CSO FACILITY 8A–STRUCTURAL FACILITIES VAULT SECTION~~
~~084A~~	~~CSO FACILITY 8A–STRUCTURAL FACILITIES VAULT SECTION~~
~~085~~	~~CSO FACILITY 8A–STRUCTURAL FACILITIES VAULT SECTIONS~~
~~086~~	~~CSO FACILITY 8A–STRUCTURAL STORAGE TANK PARTIAL PLANS–NORTH TIPPING BUCKET~~
~~087~~	~~CSO FACILITY 8A–STRUCTURAL STORAGE TANK PARTIAL PLANS–SOUTH TIPPING BUCKET~~
~~088~~	~~CSO FACILITY 8A–STRUCTURAL SECTIONS~~
~~089~~	~~CSO FACILITY 8A–STRUCTURAL SECTIONS~~
~~090~~	~~CSO FACILITY 8A–STRUCTURAL SECTION~~
~~091~~	~~CSO FACILITY 8A–STRUCTURAL DETAILS~~
~~092~~	~~CSO FACILITY 8A–STRUCTURAL DETAILS~~
~~094~~	~~CSO 8A–SHORELINE CONCRETE RETAINING WALL PLAN AND SECTIONS~~
	CSO FACILITY 8A MECHANICAL
~~096~~	~~CSO FACILITY 8A–MECHANICAL GENERAL NOTES AND LEGEND~~
~~097~~	~~CSO FACILITY 8A–MECHANICAL STANDARD DETAILS~~
~~097A~~	~~CSO FACILITY 8A–MECHANICAL DETAILS–SHEET 1 OF 2~~
~~097B~~	~~CSO FACILITY 8A–MECHANICAL DETAILS–SHEET 2 OF 2~~
~~098~~	~~CSO FACILITY 8A–MECHANICAL PIPE HANGERS AND SUPPORT SYSTEMS–SHEET 1 OF 2~~
~~099~~	~~CSO FACILITY 8A–MECHANICAL PIPE HANGERS AND SUPPORT SYSTEMS–SHEET 2 OF 2~~

SHEET INDEX

NO.	DESCRIPTION
~~101~~	~~CSO FACILITY 8A–MECHANICAL STORAGE TANK PLAN~~
~~103~~	~~CSO FACILITY 8A–MECHANICAL DRAIN PUMPS AND INFLUENT PIPE PLAN AND SECTIONS~~
~~104~~	~~CSO FACILITY 8A–MECHANICAL STORAGE TANK INFLUENT PIPE SECTIONS~~
~~105~~	~~CSO FACILITY 8A–MECHANICAL NORTH TIPPING BUCKET ASSEMBLY PLAN AND SECTIONS~~
~~106~~	~~CSO FACILITY 8A–MECHANICAL SOUTH TIPPING BUCKET ASSEMBLY PLAN AND SECTIONS~~
~~109~~	~~CSO FACILITY 8A–MECHANICAL ROOM ODOR CONTROL AND WATER SYSTEM PLAN~~
110	CSO FACILITY 8A–MECHANICAL ROOM ODOR CONTROL AND WATER SYSTEM SECTIONS–SHEET 1 OF 2
111	CSO FACILITY 8A–MECHANICAL ROOM ODOR CONTROL AND WATER SYSTEM SECTIONS–SHEET 2 OF 2
~~112~~	~~CSO FACILITY 8A–MECHANICAL ODOR CONTROL SYSTEM DETAILS~~
~~113~~	~~CSO FACILITY 8A–MECHANICAL VENTILATION SCHEDULES AND DETAILS~~
~~114~~	~~CSO FACILITY 8A–MECHANICAL ROOM VENTILATION PLAN~~
~~115~~	~~CSO FACILITY 8A–VAULT VENTILATION SECTIONS~~
~~117~~	~~CSO FACILITY 8A–MECHANICAL PLUMBING PLAN~~
~~118~~	~~CSO FACILITY 8A–MECHANICAL PLUMBING SECTIONS AND DETAILS~~
~~120~~	~~CSO FACILITY 8A–MECHANICAL WATER SYSTEM SECTIONS~~
	CSO FACILITY 8A ELECTRICAL
~~122~~	~~CSO FACILITY 8A–ELECTRICAL LEGEND AND ABBREVIATIONS~~
~~123~~	~~CSO FACILITY 8A–ELECTRICAL SITE PLAN–SHEET 1 OF 2~~
124	CSO FACILITY 8A–ELECTRICAL SITE PLAN–SHEET 2 OF 2
125	CSO FACILITY 8A–ELECTRICAL SITE DETAILS
~~126~~	~~CSO FACILITY 8A–ELECTRICAL ELECTRICAL ROOM POWER AND INSTRUMENTATION PLAN~~
~~127~~	~~CSO FACILITY 8A–ELECTRICAL MECHANICAL ROOM POWER AND INSTRUMENTATION PLAN~~
~~128~~	~~CSO FACILITY 8A–ELECTRICAL LIGHTING PLAN~~
~~129~~	~~CSO FACILITY 8A–ELECTRICAL ONE LINE DIAGRAM~~
~~131~~	~~CSO FACILITY 8A–ELECTRICAL I&C CONDUIT AND WIRING BLOCK DIAGRAM–SHEET 1 OF 2~~
~~132~~	~~CSO FACILITY 8A–ELECTRICAL I&C CONDUIT AND WIRING BLOCK DIAGRAM–SHEET 2 OF 2~~
~~133~~	~~CSO FACILITY 8A–ELECTRICAL EQUIPMENT ELEVATIONS~~
134	CSO FACILITY 8A–ELECTRICAL CONDUIT & CABLE AND LIGHTING FIXTURE SCHEDULES
~~135~~	~~CSO FACILITY 8A–ELECTRICAL PANELBOARD SCHEDULES~~
~~136~~	~~CSO FACILITY 8A–ELECTRICAL CONTROL DIAGRAMS–SHEET 1 OF 2~~
~~137~~	~~CSO FACILITY 8A–ELECTRICAL CONTROL DIAGRAMS–SHEET 2 OF 2~~
~~138~~	~~CSO FACILITY 8A–ELECTRICAL ACTUATOR CONTROL DIAGRAMS~~
~~139~~	~~CSO FACILITY 8A–ELECTRICAL MISCELLANEOUS WIRING DIAGRAMS~~
~~140~~	~~CSO FACILITY 8A–ELECTRICAL DETAILS–SHEET 1 OF 2~~
~~141~~	~~CSO FACILITY 8A–ELECTRICAL DETAILS–SHEET 2 OF 2~~
~~142~~	~~CSO FACILITY 8A–SUBMERSIBLE CABLE TERMINATION VAULT DETAILS~~
	CSO FACILITY 8A INSTRUMENTATION & CONTROLS
~~144~~	~~CSO FACILITY 8A–INSTRUMENTATION LEGEND AND ABBREVIATIONS~~
~~145~~	~~CSO FACILITY 8A–NETWORK AND COMMUNICATION BLOCK DIAGRAM~~
~~146~~	~~CSO FACILITY 8A–P&ID LAKELINE CONTROL GATE AND EFFLUENT CONTROL STRUCTURE~~
~~147~~	~~CSO FACILITY 8A–P&ID INFLUENT CONTROL STRUCTURE AND CSO FACILITY 8A OVERFLOW STRUCTURE~~
~~148~~	~~CSO FACILITY 8A–P&ID STORAGE TANK DRAIN PUMPS~~
~~149~~	~~CSO FACILITY 8A–P&ID STORAGE TANK TIPPING BUCKETS AND FILL VALVES~~
~~150~~	~~CSO FACILITY 8A–P&ID WASH WATER SYSTEM~~
~~151~~	~~CSO FACILITY 8A–P&ID ODOR CONTROL SYSTEM~~
~~152~~	~~CSO FACILITY 8A–P&ID ELECTRICAL ROOM VENTILATION AND GAS MONITORING~~
~~153~~	~~CSO FACILITY 8A–P&ID MECHANICAL ROOM VENTILATION AND GAS MONITORING~~
~~153A~~	~~CSO FACILITY 8A–P&ID ENTRYWAY VENTILATION AND GAS MONITORING~~
~~154~~	~~CSO FACILITY 8A–P&ID MECHANICAL AND ELECTRICAL ROOMS SUMP PUMPS~~
~~155~~	~~CSO FACILITY 8A–MAIN CONTROL PANEL ELEVATION~~
~~156~~	~~CSO FACILITY 8A–MAIN CONTROL PANEL LAYOUT~~
~~157~~	~~CSO FACILITY 8A–INSTRUMENTATION DETAILS~~
~~159~~	~~CSO FACILITY 8A–CONTROL POWER TYPICAL PANEL DISTRIBUTION~~
~~160~~	~~CSO FACILITY 8A–CONTROL PANEL TYPICAL I/O MODULE CONNECTIONS~~

VAULT SERIAL NO.	DATE	MARK	NATURE REVISIONS	MADE	CHK'D	REV'D

C:\pwworking\sea\d0853917\002 C304102-P-MISC-G002.dwg
pettitem Dec-04-13 1:50pm

MUP SUBMITTAL

SHEET INDEX–SHEET 1 OF 2

HDR Engineering, Inc.

CH2MHILL

REVIEWED BY SPU/WATER ENGINEERING ..... 20....
REVIEWED BY SPU/DRAINAGE ..... 20....
APPROVED BY SDOT STREET IMPROVEMENT PERMITTING ..... 20....

APPROVED FOR ADVERTISING
NANCY LOCKE
DEPARTMENT OF FINANCE & ADMINISTRATIVE SERVICES
SEATTLE, WASHINGTON 20
BY:
PURCHASING & CONTRACTING SERVICES DIRECTOR

NAME OR INITIALS AND DATE		INITIALS AND DATE	
DESIGNED	XD–10/25/13	REVIEWED:	
CHECKED	BOB–11/01/13	DES.	CONST.
		SDOT	PROJ. MGR.
DRAWN	PCW–10/25/13	RECEIVED	
CHECKED	BOB–11/01/13	REVISED AS BUILT	

ALL WORK SHALL BE DONE IN ACCORDANCE WITH THE CITY OF SEATTLE STANDARD PLANS AND SPECIFICATIONS AND OTHER DOCUMENTS CALLED FOR IN SECTION 0–02.3 OF THE PROJECT MANUAL.

ERIC C.M. BERGSTROM
STATE OF WASHINGTON
27347
REGISTERED
PROFESSIONAL ENGINEER

Seattle Public Utilities
City of Seattle
Ray Hoffman, Director
ORDINANCE NO.
FUND:
SCALE: NONE
APPROVED
INSPECTOR'S BOOK

HENDERSON NORTH
CSO REDUCTION

JOB NO. PC C304102 R/W CO C304102
VAULT PLAN NO.
SHEET 002 OF 320

SHEET INDEX

NO.	DESCRIPTION
	CSO FACILITY 29A CIVIL
~~168~~	~~CSO FACILITY 29A–TESC GENERAL NOTES~~
~~169~~	~~CSO FACILITY 29A–TESC RIGHT OF WAY~~
~~170~~	~~CSO FACILITY 29A–GRADING PLAN RIGHT–OF–WAY~~
~~171~~	~~CSO FACILITY 29A–DEMOLITION PLAN~~
~~171A~~	~~CSO FACILITY 29A–PIPING PLAN~~
~~172~~	~~CSO FACILITY 29A–SEWER PROFILES~~
~~173~~	~~CSO FACILITY 29A–PAVING PLAN RIGHT OF WAY~~
~~174~~	~~CSO FACILITY 29A–ROAD SECTIONS AND PAVING DETAILS~~
~~178~~	~~CSO FACILITY 29A–MICELLANEOUS DETAILS AND SECTIONS–SHEET 1 OF 3~~
~~178A~~	~~CSO FACILITY 29A–MISCELLANEOUS DETAILS AND SECTIONS–SHEET 2 OF 3~~
~~179~~	~~COS FACILITY 29A–MISCELLANEOUS DETAILS AND SECTIONS–SHEET 3 OF 3~~
	CSO FACILITY 29A LANDSCAPING
~~179A~~	~~CSO FACILITY 29A–PLANTING PLAN~~
~~179B~~	~~CSO FACILITY 29A–PLANTING SCHEDULE AND DETAILS~~
	CSO FACILITY 29A ELECTRICAL
~~192~~	~~CSO FACILITY 29A–ELECTRICAL SITE PLAN~~
~~193~~	~~CSO FACILITY 29A–ELECTRICAL ONE LINE DIAGRAM~~
~~194~~	~~CSO FACILITY 29A–ELECTRICAL CONDUIT AND WIRING BLOCK DIAGRAM~~
	CSO FACILITY 29A INSTRUMENTATION & CONTROLS
~~203~~	~~CSO FACILITY 29A–P&ID STORAGE PIPE~~
~~204~~	~~CSO FACILITY 29A–P&ID NPDES 45A OVERFLOW STRUCTURE~~
~~206~~	~~CSO FACILITY 29A–LOCAL CONTROL PANEL LAYOUT~~
	SHORING
~~300~~	~~SHORING GENERAL NOTES~~
~~301~~	~~CSO FACILITY 8A–SHORING DESIGN LATERAL EARTH PRESSURES~~
302	CSO FACILITY 8A–SHORING SITE PLAN
~~303~~	~~CSO FACILITY 8A SHORING CONSTRUCTION SEQUENCING~~
~~304~~	~~CSO FACILITY 8A–SOUTH & EAST WALL SECANT PILE SCHEDULE~~
~~305~~	~~CSO FACILITY 8A–NORTH & WEST WALL SECANT PILE SCHEDULE~~
~~306~~	~~CSO FACILITY 8A–NORTH INNER WALL SECANT PILE SCHEDULE~~
~~307~~	~~CSO FACILITY 8A–TIEBACK SCHEDULES~~
~~308~~	~~CSO FACILITY 8A–WALL ELEVATIONS–EAST–SHEET 1 OF 5~~
~~309~~	~~CSO FACILITY 8A–WALL ELEVATIONS–EAST–SHEET 2 OF 5~~
~~310~~	~~CSO FACILITY 8A–WALL ELEVATIONS–WEST–SHEET 3 OF 5~~
~~311~~	~~CSO FACILITY 8A–WALL ELEVATIONS–WEST–SHEET 4 OF 5~~
~~312~~	~~CSO FACILITY 8A WALL ELEVATIONS NORTH, SOUTH & NORTH INNER WALL SHEET 5 OF 5~~
~~313~~	~~CSO FACILITY 8A–SHORING SECTIONS~~
~~314~~	~~CSO FACILITY 8A AND 29A–SHORING DETAILS–SHEET 1 OF 3~~
~~315~~	~~CSO FACILITY 8A AND 29A–SHORING DETAILS–SHEET 2 OF 3~~
~~316~~	~~CSO FACILITY 8A AND 29A–SHORING DETAILS–SHEET 3 OF 3~~
320	CSO FACILITY 8A SHORING CROSS SECTIONS

VAULT SERIAL NO.	DATE	MARK	NATURE REVISIONS	MADE	CHK'D	REV'D

C:\pwworking\sea\d0883917\003 C304102-P-MISC-G003.dwg
pwitherm Dec-04-13 2:09pm

MUP SUBMITTAL

SHEET INDEX–SHEET 2 OF 2

HDR Engineering, Inc.

CH2MHILL

REVIEWED BY SPU/WATER ENGINEERING ..... 20.....
REVIEWED BY SPU/DRAINAGE ..... 20.....
APPROVED BY SDOT STREET IMPROVEMENT PERMITTING ..... 20.....

APPROVED FOR ADVERTISING
NANCY LOCKE
DEPARTMENT OF FINANCE & ADMINISTRATIVE SERVICES
SEATTLE, WASHINGTON 20

BY:
PURCHASING & CONTRACTING SERVICES DIRECTOR

NAME OR INITIALS AND DATE	INITIALS AND DATE
DESIGNED XD–10/25/13	REVIEWED: DES. CONST. SDOT PROJ. MGR.
CHECKED BOB–11/01/13	
DRAWN PCW–10/25/13	RECEIVED
CHECKED BOB–11/01/13	REVISED AS BUILT

ALL WORK SHALL BE DONE IN ACCORDANCE WITH THE CITY OF SEATTLE STANDARD PLANS AND SPECIFICATIONS AND OTHER DOCUMENTS CALLED FOR IN SECTION 0–02.3 OF THE PROJECT MANUAL.

ERIC C.M. BERGSTROM
STATE OF WASHINGTON
27347
REGISTERED
PROFESSIONAL ENGINEER

Seattle Public Utilities

City of Seattle
Ray Hoffman, Director

ORDINANCE NO. APPROVED
FUND:
SCALE: NONE INSPECTOR'S BOOK

HENDERSON NORTH
CSO REDUCTION

JOB NO. PC C304102 R/W CO C304102
VAULT PLAN NO.
SHEET 003 OF 320

GENERAL NOTES
UNLESS OTHERWISE NOTED:

1. ALL WORK SHALL CONFORM TO THE 2011 CITY OF SEATTLE (COS) STANDARD SPECIFICATION FOR ROAD, BRIDGE, AND MUNICIPAL CONSTRUCTION, THE 2011 CITY OF SEATTLE STANDARD PLANS, AND SEATTLE DEPARTMENT OF TRANSPORTATION (SDOT) DIRECTORS RULE 5–2009 FOR STREET AND SIDEWALK PAVEMENT OPENING AND RESTORATION (DATED SEPTEMBER 29, 2009 OR CURRENT VERSION). A COPY OF THESE DOCUMENTS SHALL BE ON SITE AT ALL TIMES DURING CONSTRUCTION.
2. A COPY OF THE APPROVED PLANS AND PERMITS MUST BE ON SITE WHENEVER CONSTRUCTION IS IN PROGRESS.
3. THE CONTRACTOR SHALL OBTAIN AND COMPLY WITH ALL PERMITS REQUIRED FOR WORK WITHIN THE PUBLIC RIGHT–OF–WAY.
4. CONTRACTOR SHALL PROVIDE NON–CONTAMINATED (COS 1–07.30(3)), TEMPORARY ACCESS ROUTES TO ALL AFFECTED BUSINESSES AND RESIDENCES WITHIN THE PROJECT SITE. COORDINATE WITH THE ENGINEER, BUSINESS OWNERS, RESIDENTS, AND PUBLIC AS NECESSARY.
5. PAVED SURFACES IN THE PUBLIC RIGHT OF WAY INCLUDING ROADWAYS, SIDEWALKS, AND CURBS THAT ARE DAMAGED BY CONSTRUCTION ACTIVITIES SHALL BE REPAIRED AS DIRECTED BY THE ENGINEER.
6. ALL SURVEYING AND STAKING OF IMPROVEMENTS IS TO BE PROVIDED BY THE CONTRACTOR AT THE CONTRACTOR'S EXPENSE, IN ACCORDANCE WITH COS STANDARDS.
7. THE CONTRACTOR SHALL CONTACT THE UNDERGROUND UTILITIES LOCATOR SERVICE (1–800–424–5555) AT LEAST 48 HOURS PRIOR TO CONSTRUCTION. A PRIVATE/THIRD PARTY LOCATE SERVICE SHALL BE USED TO LOCATE/IDENTIFY BURIED UTILITIES ON PRIVATE PROPERTY.
8. THE CONTRACTOR IS RESPONSIBLE FOR DETERMINING THE EXTENT OF AND HAZARD CREATED BY OVERHEAD POWER AND OTHER UTILITIES. THE CONTRACTOR SHALL MEET WITH UTILITY OWNER PRIOR TO CONSTRUCTION AND SHALL TAKE WHATEVER PRECAUTIONS ARE REQUIRED BY LAW AND REGULATIONS, UTILITY OWNERS, SAFE CONSTRUCTION PRACTICES.
9. ALL LOCATIONS OF EXISTING UTILITIES SHOWN HEREON HAVE BEEN ESTABLISHED BY FIELD SURVEY OR OBTAINED FROM AVAILABLE RECORDS AND SHOULD THEREFORE BE CONSIDERED APPROXIMATE ONLY AND NOT NECESSARILY COMPLETE. IT IS THE RESPONSIBILITY OF THE CONTRACTOR TO INDEPENDENTLY VERIFY THE ACCURACY OF ALL UTILITY LOCATIONS SHOWN AND TO FURTHER DISCOVER AND AVOID ANY OTHER UTILITIES NOT SHOWN HEREON WHICH MAY BE AFFECTED BY THE IMPLEMENTATION OF THIS PLAN.
10. INSPECTION AND ACCEPTANCE OF ALL WORK WILL BE ACCOMPLISHED BY ENGINEER. IT SHALL BE THE CONTRACTOR'S RESPONSIBILITY TO COORDINATE AND SCHEDULE APPROPRIATE INSPECTIONS, ALLOWING PROPER ADVANCE NOTICE. THE ENGINEER MAY REQUIRE RECONSTRUCTION OF ITEMS THAT DO NOT MEET CITY STANDARDS OR THAT WERE CONSTRUCTED WITHOUT INSPECTION AT CONTRACTOR'S EXPENSE.
11. THE REQUIREMENTS OF THIS PLAN ARE THE MINIMUM REQUIREMENTS. THEY DO NOT REPLACE, REPEAL, ABROGATE, SUPERSEDE, OR AFFECT ANY OTHER MORE STRINGENT REQUIREMENTS, RULES, REGULATIONS, STANDARDS, OR RESTRICTIONS.
12. THE REFUSE RESULTING FROM CLEARING AND GRUBBING SHALL BE DISPOSED OF BY THE CONTRACTOR PER THE SPECIFICATIONS. IN NO CASE SHALL REFUSE MATERIAL BE LEFT ON THE PROJECT PROPERTY, PLACED ON ABUTTING PROPERTIES, OR BURIED IN EMBANKMENTS OR TRENCHES.
13. CONTRACTOR SHALL PROTECT POWER POLES NEAR EXCAVATIONS PER WAC 296–155–655(9)(a). ALL EXCAVATION ADJACENT TO SEATTLE CITY LIGHT POLES OR OTHER INSTALLATIONS SHALL COMPLY WITH THE WAC SAFETY STANDARDS FOR CONSTRUCTION WORK, PART N. SITE SAFETY PROCEDURES AND EXCAVATION PROTECTION SYSTEMS SHALL SPECIFICALLY COMPLY WITH WAC 296–155–650, EXCAVATION, TRENCHING, AND SHORING.
14. UTILITIES ENCOUNTERED DURING CONSTRUCTION SHALL BE SUPPORTED OR OTHERWISE PROTECTED. WATER MAINS MAY BE SUPPORTED WITH STRAPS BUT CHAINS AND CABLES WILL NOT BE ALLOWED. RESTORATION OF BEDDING AND BACKFILL SHALL BE SELECTED NATIVE MATERIAL IF APPROVED BY THE ENGINEER.
15. TRUCK TRAFFIC SHALL BE MINIMIZED THROUGH THE NEIGHBORHOODS. TRUCK TRAFFIC SHALL USE ARTERIAL ROUTES WHERE POSSIBLE.
16. COMPLY WITH CITY OF SEATTLE'S ANTI–IDLING PROVISION.

GENERAL NOTES
UNLESS OTHERWISE NOTED:

17. THE CONTRACTOR SHALL NOTIFY THE SEATTLE FIRE DEPARTMENT DISPATCHER (206) 386–1495 AT LEAST TWENTY–FOUR (24) HOURS IN ADVANCE OF ALL WATER SERVICE INTERRUPTIONS, HYDRANT SHUTOFFS, AND STREET CLOSURES OR OTHER ACCESS BLOCKAGE. THE CONTRACTOR SHALL ALSO NOTIFY THE DISPATCHER OF ALL NEW, RELOCATED, OR ELIMINATED HYDRANTS RESULTING FROM THIS WORK.
18. THE CONTRACTOR SHALL LOCATE AND PROTECT ALL CASTINGS AND UTILITIES DURING CONSTRUCTION.
19. SPU–DWD MUST PERFORM ALL CORE DRILL OPERATIONS INTO EXISTING MAINS OR STRUCTURES. CONTRACTORS ARE NOT ALLOWED TO CORE INTO MAINS OR STRUCTURES WITHOUT PRIOR APPROVAL FROM SPU–DWD. TO SCHEDULE CORE CUTS CONTACT SPU–DWD AT (206) 615–0511 A MINIMUM OF FOURTY–EIGHT (48) HOURS IN ADVANCE.
20. CONTRACTOR SHALL NOTIFY KING COUNTY METRO AT 684–2732 FOURTEEN DAYS IN ADVANCE OF ANY IMPACT TO TRANSIT OPERATIONS.
21. COORDINATE SIGN AND PAY STATION AND/OR PARKING METER HEAD REMOVAL AND INSTALLATION WITH SEATTLE DEPARTMENT OF TRANSPORTATION AT 684–5370. SIGNPOSTS ARE TO BE INSTALLED IN ACCORDANCE WITH STANDARD PLANS 616, 620, 621A, 621B, 625, AND 626.
22. ALL STREET NAME SIGNS MUST BE INSTALLED BY SEATTLE DEPARTMENT OF TRANSPORTATION AT THE CONTRACTOR'S EXPENSE.
23. CONTRACTOR SHALL COORDINATE WITH SEATTLE CITY LIGHT FOUR (4) DAYS IN ADVANCE WHEN INSTALLING PIPES UNDERNEATH ELECTRICAL DUCTS OR WITHIN FIVE FEET OF ANY LINES OR POLES. CONTACT SHELBY CALIPES AT SEATTLE CITY LIGHT AT (206) 386–1635.

NOTES:

1. SYMBOLS IN THIS DOCUMENT ARE PER CITY OF SEATTLE 2011 STANDARD PLANS FOR MUNICIPAL CONSTRUCTION.
   – SYMBOLS ARE PER STANDARD PLAN NO. 003a THROUGH 003o.
2. STANDARD PLANS FOR MUNICIPAL CONSTRUCTION CAN BE FOUND ON THE CITY OF SEATTLE WEB SITE AT:

   http://www.seattle.gov/util/engineering/standard_plans_&_specs/index.asp
3. MECHANICAL/HVAC, ELECTRICAL AND INSTRUMENTATION AND CONTROLS SYMBOLOGY ARE INCLUDED ON SHEETS 096, 122, AND 144.
4. GRADING MUST BE STABILIZED BY OCTOBER 31ST, AND NO EXCAVATION OR FILL PLACEMENT CAN BE PERFORMED BETWEEN OCTOBER 31ST AND APRIL 1ST WITHOUT WRITTEN EXTENSION FROM THE DPD GEOTECHNICAL ENGINEERING GROUP.

SURVEY NOTES
UNLESS OTHERWISE NOTED:

1. STATIONING AND OFFSETS ON DRAINAGE PLAN AND PROFILES, PAVING PLAN AND PROFILE, AND SITE PIPING ARE RELATIVE TO SURVEY MONUMENT ALIGNMENT.
2. ALL PROPERTY CORNERS WITHIN THE PROJECT AREA SHALL BE REFERENCED OUT BY A SPU LAND SURVEYOR.
3. HORIZONTAL AND VERTICAL DATUM: H = NAD 83 (GPS)
   V = NAVD–88
4. THE CONTRACTOR SHALL BE RESPONSIBLE FOR REFERENCING AND REPLACING ALL SURVEY MONUMENTS PER RCW 58.24.040(8) AND PER SEATTLE STANDARD SPECIFICATIONS 2011 EDITION SECTION 1–07.28(17). THE WASHINGTON STATE DEPARTMENT OF NATURAL RESOURCES PUBLIC LAND SURVEY OFFICE PERMIT MUST BE SUBMITTED TO THE SPU LAND SURVEY SECTION 4 DAYS PRIOR TO REMOVING OR DESTROYING A SURVEY MONUMENT. THE CONTRACTOR MAY REQUEST THAT THE SPU LAND SURVEY SECTION PERFORM THE REQUIRED SURVEY MONUMENT PERMITTING AND SURVEYING (SPU LAND SURVEY SECTION: 206–866–6093 OR SPU_LANDSURVEY@SEATTLE.GOV)

GRADING NOTES
UNLESS OTHERWISE NOTED:

1. GRADING SHALL CONFORM TO SHAPES AND CONFIGURATIONS SHOWN ON PLANS AND AS APPROVED BY ENGINEER. CONTRACTOR SHALL PROVIDE SMOOTH AND ROUNDED TRANSITIONS IN CONTOURS.
2. ANY GRADING WITHIN CRITICAL ROOT ZONE SHALL BE UNDER THE DIRECTION OF ENGINEER. SEE COS SPEC 8–01.3(2)B.
3. CONTRACTOR SHALL MEET AND MATCH EXISTING ELEVATIONS AT STREET AND RIGHT–OF–WAY EDGES AND AT LIMITS OF GRADING WORK.
4. PRIOR TO CHANGING GRADE AT POWER POLES MORE THAN 0.5', CONTACT SHELBY CALIPES AT SEATTLE CITY LIGHT AT (206) 386–1635, TO TREAT WOOD SURFACES.
5. ALL BERMS ARE 2.5:1 SLOPE MIN. UNLESS OTHERWISE NOTED.

VAULT SERIAL NO.	DATE	MARK	NATURE REVISIONS	MADE	CHK'D	REV'D

MUP SUBMITTAL

CSO FACILITY 8A AND CSO FACILITY 29A–GENERAL NOTES–SHEET 1 OF 2

HDR Engineering, Inc.

CH2MHILL

0 ½ 1
IF THIS BAR DOES NOT MEASURE 1" THEN DRAWING IS NOT PLOTTED TO ORIGINAL SCALE.

APPROVED FOR ADVERTISING
NANCY LOCKE
DEPARTMENT OF FINANCE & ADMINISTRATIVE SERVICES
SEATTLE, WASHINGTON 20
BY:
PURCHASING & CONTRACTING SERVICES DIRECTOR

NAME OR INITIALS AND DATE		INITIALS AND DATE	
DESIGNED	XD–10/25/13	REVIEWED: DES.	CONST.
CHECKED	BOB–11/01/13	SDOT	PROJ. MGR.
DRAWN	PCW–10/25/13	RECEIVED	
CHECKED	BOB–11/01/13	REVISED AS BUILT	

ALL WORK SHALL BE DONE IN ACCORDANCE WITH THE CITY OF SEATTLE STANDARD PLANS AND SPECIFICATIONS AND OTHER DOCUMENTS CALLED FOR IN SECTION 0–02.3 OF THE PROJECT MANUAL.

E.R.C. C.M. BERGSTROM
STATE OF WASHINGTON
27347
REGISTERED
PROFESSIONAL ENGINEER

Seattle Public Utilities
City of Seattle
Ray Hoffman, Director
ORDINANCE NO.
FUND:
SCALE: NONE
APPROVED
INSPECTOR'S BOOK

HENDERSON NORTH
CSO REDUCTION

JOB NO. PC C304102 R/W CO C304102
VAULT PLAN NO.
SHEET 004 OF 320

C:\pwworking\sea\d0983917\004 C304102-P-Notes-446001.dwg
pwilterm Nov-14-13 1:28pm

EXCAVATION AND DEWATERING NOTES
UNLESS OTHERWISE NOTED:

1. HEAVY CONSTRUCTION EQUIPMENT, BUILDING MATERIALS, AND SURCHARGE LOADS SUCH AS EXCAVATED OR IMPORTED SOIL SHALL NOT BE ALLOWED WITHIN ONE THIRD OF THE SLOPE HEIGHT FROM THE TOP OF ANY EXCAVATION.
2. FOR EXCAVATIONS THAT REQUIRE SHORING THE CONTRACTOR SHALL SUBMIT A SHORING PLAN THAT IS DESIGNED AND STAMPED BY A REGISTERED STRUCTURAL ENGINEER, WHO IS LICENSED TO PRACTICE IN THE STATE OF WASHINGTON.
3. SUPPORT AND SAFETY SYSTEM (COS STANDARD SPEC 2-07.3(3)) SHALL BE REQUIRED WHERE EXCAVATION WALLS WILL BE WITHIN A HORIZONTAL DISTANCE FROM ADJACENT UTILITIES OR STRUCTURES THAT IS EQUAL TO THE TRENCH DEPTH.
4. THE GEOTECHNICAL DATA COLLECTED BY SHANNON & WILSON IS INCLUDED AS PART OF THE PROJECT MANUAL AND SHALL BE CONSULTED FOR INFORMATION REGARDING THE WATER TABLE AND SOIL PROPERTIES.
5. ALL EXCAVATION AND SHORING SHALL BE IN ACCORDANCE WITH WAC SECTION 296-155. THE CONTRACTOR SHALL CONTINUALLY MAINTAIN SAFE TEMPORARY CUT-SLOPES.
6. DEWATERING DISCHARGE TO PUBLIC STORM DRAIN SYSTEM, INCLUDING NATURAL WATER COURSES, MUST BE APPROVED BY DEPARTMENT OF ECOLOGY, AND SHALL BE PER THE PROJECT'S APPROVED SWPPP AND CONSTRUCTION STORMWATER CONTROL PLAN.
7. SURFACE WATER THAT FLOWS ON TO PROJECT WORK AREAS FROM ADJACENT PROPERTIES OR RIGHTS-OF-WAY SHALL BE COLLECTED AND CONTROLLED BY THE CONTRACTOR.
8. FLOW FROM CONSTRUCTION ENTRANCE AND TRUCK/VEHICLE WASH SHALL BE TREATED AND DISCHARGED PER THE KING COUNTY DISCHARGE PERMIT AND SHALL COMPLY WITH NPDES CSGP REGULATIONS..
9. ALL CONSTRUCTION WASTEWATER DISCHARGES TO THE SEWER SHALL BE IN ACCORDANCE WITH THE KING COUNTY DISCHARGE PERMIT AND SHALL COMPLY WITH NPDES CSGP REGULATIONS.
10. CONTRACTOR IS RESPONSIBLE FOR LOCATING DISCHARGE POINTS AND HAVING THEM APPROVED BY THE ENGINEER.
11. SALVAGE MANHOLE LIDS FOR REUSE. DO NOT CUT OR DAMAGE CASTINGS. MAINTAIN CONTROL OF OPEN MANHOLE AT ALL TIMES. PREVENT UNAUTHORIZED ACCESS TO SEWER SYSTEM. USE TEMPORARY FABRICATIONS TO SEAL OPENING AROUND DISCHARGE PIPE. DO NOT ALLOW TRAFFIC TO DAMAGE CONNECTION.
12. TEMPORARY STOCKPILES SHALL BE STORED ONSITE FOR REUSE IF POSSIBLE AND SHALL NOT BE HIGHER THAN 10 FEET AND SHALL CONFORM TO COS STORMWATER, GRADING AND DRAINAGE CONTROL CODE AS APPLICABLE.

GENERAL DRAINAGE AND SEWER NOTES
UNLESS OTHERWISE NOTED:

1. THE CONTRACTOR SHALL VERIFY THE LOCATION AND ELEVATION OF THE EXISTING STORM DRAIN FEATURES AT THE POINTS OF CONNECTION TO THE PROPOSED DRAINAGE SYSTEM PRIOR TO CONSTRUCTION. THE CONTRACTOR SHALL IMMEDIATELY NOTIFY THE ENGINEER OF ANY DISCREPANCIES.
2. NEW PIPE SHALL BE INSTALLED ACCORDING TO COS STANDARD SPECIFICATION DIVISION 7. BEDDING MATERIAL FOR PIPE SHALL BE MECHANICALLY COMPACTED TO 90% OF MAXIMUM DRY DENSITY AS MEASURED IN ACCORDANCE WITH ASTM D 1557.
3. WHERE A NEW PIPE CLEARS AN EXISTING OR NEW UTILITY BY 6" OR LESS, POLYETHYLENE PLASTIC FOAM SHALL BE PLACED AS A CUSHION BETWEEN THE UTILITIES.
4. SERVICE DRAINS AND CATCH BASIN CONNECTIONS SHALL NOT BE BACKFILLED UNTIL THE PIPE HAS BEEN INSPECTED AND APPROVED AND THE LOCATION AND DEPTH RECORDED BY THE ENGINEER.
5. THE CONTRACTOR SHALL VERIFY DIMENSIONS AND LOCATIONS OF EXISTING UTILITIES PRIOR TO ORDERING MATERIALS.
6. THE DEMOLITION AND REMOVAL DRAWINGS DO NOT DEFINE PRECISE LIMITS OF OVER EXCAVATION FOR DRAINAGE STRUCTURES. EXCAVATION AND BACKFILL LIMITS SHALL BE AS REQUIRED TO ACCOMMODATE STRUCTURE ASSEMBLIES SHOWN IN THE DETAILS ON THESE DRAWINGS AND ON THE STANDARD PLANS.
7. THE CONTRACTOR SHALL CONSTRUCT AND OPERATE SYSTEMS FOR TEMPORARY BYPASS OF STORM DRAINAGE FLOWS AROUND THE ACTIVE WORK AREA. SEE PROJECT MANUAL.
8. CONTRACTOR TO PROVIDE TEMPORARY BYPASS PUMPING FOR LOCATION SHOWN ON SHEETS 027, 028, 037, AND 171.
9. THE TEMPORARY BYPASS PUMPING SYSTEM WILL BE REQUIRED UNTIL STORM DRAIN PIPING INSTALLED SHOWN ON SHEET ##.
10. THE TEMPORARY BYPASS PUMPING SYSTEM SHALL CONSIST OF A DUPLEX PUMPING SYSTEM (ONE PUMP REDUNDANCY) AND ## INCH DISCHARGE PIPING. EACH PUMP SHALL BE CAPABLE OF PUMPING ## GALLONS PER MINUTE (GPM) AT ## FEET TOTAL DYNAMIC HEAD (TDH). SHOULD ONE PUMP BECOME INOPERABLE, IT SHALL BE REPLACED THE NEXT CALENDAR DAY.
11. POWER TO THE TEMPORARY BYPASS PUMPING SYSTEM SHALL BE VIA A POLE/POST MOUNTED TEMPORARY ELECTRICAL SERVICE PANEL CONNECTION AND MUST BE CAPABLE OF ACCEPTING A STANDBY GENERATOR PLUG IN THE EVENT OF A POWER OUTAGE.
12. THE STANDBY GENERATOR FUEL STORAGE CAPACITY SHALL BE 24 HOURS AT FULL LOAD AND SHALL BE CHECKED A MINIMUM OF TWICE A WEEK.
13. THE TEMPORARY BYPASS PUMPING SYSTEM SHALL BE EQUIPPED WITH CONTROLS WHICH AUTOMATICALLY TURN THE PUMPS ON AND OFF (LEVEL ELEVATIONS TO BE PROVIDED). IT SHALL ALSO BE EQUIPPED WITH A HIGH LEVEL ALARM. HIGH LEVEL ALARMS SHALL BE DIRECTED TO THE CONTRACTOR WHO SHALL RECEIVE NOTIFICATION (VIA PAGER OR CELL PHONE) AND NEEDS TO HAVE A DESIGNATED REPRESENTATIVE RESPOND TO THE SITE WITHIN 12 HOURS.
14. ANY FINES AND/OR PENALTIES AS A RESULT OF ANY FLOODING AND/OR OVERFLOWS DUE TO THE BYPASS PUMPING SYSTEM BEING DOWN (INOPERABLE) WILL BE THE RESPONSIBILITY OF THE CONTRACTOR.

WATER NOTES
UNLESS OTHERWISE NOTED:

1. WATER METER AND HYDRANT ADJUSTMENT OR RELOCATION SHALL BE BY SPU WATER CREWS. FOR WATER METER AND SERVICE WORK CONTACT SPU CUSTOMER SERVICE REPRESENTATIVE BRAD SAGER AT 206-684-0832, MINIMUM 10 DAYS PRIOR TO ESTABLISHMENT OF ROUGH GRADE WITHIN THE TWO-FOOT ROAD SHOULDER (SEE SPECS). FOR HYDRANT ADJUSTMENTS AND RELOCATIONS CONTACT THE ENGINEER, MINIMUM 15 DAYS PRIOR TO CONSTRUCTION.
2. THE ENGINEER HAS OBTAINED THE WATER AVAILABILITY CERTIFICATE FOR THE PROPOSED WATER SERVICE TAP. CONTRACTOR MUST SUBMIT THIS CERTIFICATE, ALONG WITH APPLICABLE PLAN SHEETS AND A COMPLETE WATER SERVICE APPLICATION AND AGREEMENT, TO SPU CUSTOMER SERVICE TO SCHEDULE A PRE-CONSTRUCTION SITE VISIT. CONTRACTOR SHALL PAY ALL APPLICABLE FEES ASSOCIATED WITH THE WATER SERVICE INSTALLATION, AND SHALL COORDINATE INSTALLATION WITH THE ASSIGNED SPU CREW CHIEF.
3. APPLICATION PROCESSING, SCHEDULING, INSTALLATION, AND INSPECTION FOR THE WATER SERVICE CAN TAKE APPROXIMATELY 60 TO 90 DAYS.
4. IN THE OFFICIAL CONSTRUCTION SCHEDULE THE CONTRACTOR SHALL ALLOW MINIMUM 3-DAYS PER CONSTRUCTION BLOCK FOR SPU WATER CREWS TO PERFORM SERVICE WORK. PLEASE CONTACT BRAD SAGER WITH SPU AT 206-684-0832 TO SCHEDULE.
5. THE CONTRACTOR SHALL NOT DAMAGE, REPAIR, ALTER, DISMANTLE, OR OPERATE ANY SPU WATER MAINS, SERVICES, HYDRANTS, TEST STATIONS, OR VALVES. FOR WORK TO BE PERFORMED BY SPU, THE CONTRACTOR SHALL CONTACT THE ENGINEER, MINIMUM 15 DAYS IN ADVANCE TO ARRANGE FOR SCHEDULING THE WORK.
6. ALL WATER SERVICES PIPING AND PROPERTY MUST BE INSPECTED PRIOR TO BACKFILLING TRENCH.
7. FOR ALL WATER SERVICE INFORMATION, PHONE (206) 386-5800.
8. IN THE EVENT OF AN EMERGENCY INVOLVING BROKEN WATER FACILITIES CALL (206) 386-1800.

GAS NOTES
UNLESS OTHERWISE NOTED:

1. CONTRACTOR TO COORDINATE TIMING OF GAS MAIN AND SERVICE CONSTRUCTION OBSERVATION JUSTIN MCCONACHIE WITH PSE, 425-457-5777.
2. CONTRACTOR SHALL ADJUST VALVE BOXES TO NEW GRADE AS REQUESTED BY ENGINEER.

VAULT SERIAL NO.	DATE	MARK	NATURE REVISIONS	MADE	CHK'D	REV'D

C:\pwworking\sea\d0883917\005 C304102-P-Notes-440002.dwg
ahukic Nov-19-13 9:49am

MUP SUBMITTAL

CSO FACILITY 8A AND CSO FACILITY 29A-GENERAL NOTES-SHEET 2 OF 2

HDR Engineering, Inc.

CH2MHILL

REVIEWED BY SPU/WATER ENGINEERING ..... 20.....
REVIEWED BY SPU/DRAINAGE ..... 20.....
APPROVED BY SDOT STREET IMPROVEMENT PERMITTING ..... 20.....

APPROVED FOR ADVERTISING
NANCY LOCKE
DEPARTMENT OF FINANCE & ADMINISTRATIVE SERVICES
SEATTLE, WASHINGTON 20
BY:
PURCHASING & CONTRACTING SERVICES DIRECTOR

NAME OR INITIALS AND DATE	
DESIGNED	XD-10/25/13
CHECKED	BOB-11/01/13
DRAWN	PCW-10/25/13
CHECKED	BOB-11/01/13

INITIALS AND DATE
REVIEWED:
DES. CONST.
SDOT PROJ. MGR.
RECEIVED
REVISED AS BUILT

ALL WORK SHALL BE DONE IN ACCORDANCE WITH THE CITY OF SEATTLE STANDARD PLANS AND SPECIFICATIONS AND OTHER DOCUMENTS CALLED FOR IN SECTION 0-02.3 OF THE PROJECT MANUAL.

ERIC C.M. BERGSTROM
STATE OF WASHINGTON
27347
REGISTERED
PROFESSIONAL ENGINEER

Seattle Public Utilities
City of Seattle
Ray Hoffman, Director
ORDINANCE NO. APPROVED
FUND:
SCALE: NONE INSPECTOR'S BOOK

HENDERSON NORTH
CSO REDUCTION

JOB NO. PC C304102
R/W
CO C304102
VAULT PLAN NO.
SHEET 005 OF 320

AB	ANCHOR BOLT
ACC	AREA CONTROL CENTER
ACI	AMERICAN CONCRETE INSTITUTE
ACP	ASBESTOS CEMENT PIPE
ADD	ADDITION(AL)
ADJ	ADJUSTABLE
ADPT	ADAPTER
AF	AIR FILTER
AFF	ABOVE FINISHED FLOOR
AHU	AIR HANDLING UNIT
AISC	AMERICAN INSTITUTE OF STEEL CONSTRUCTION
ALT	ALTERNATE
AMB	AMBIENT
AMD	AIR MONITORING DEVICE
ANC	ANCHOR
AR	AIR RETURN
ARCH	ARCHITECTURAL
AS	AIR SUPPLY
ASCE	AMERICAN SOCIETY OF CIVIL ENGINEERS
ASSY	ASSEMBLY
ASTM	AMERICAN SOCIETY FOR TESTING AND MATERIALS
ATM	ATMOSPHERE
AUTO	AUTOMATIC
AUX	AUXILIARY
AV	ANGLE VALVE
AWG	AMERICAN WIRE GAUGE
BBE	BEVEL BOTH ENDS
BC	BEGINNING OF CURVE
BCOP	BARE COPPER
BCR	BEGINNING OF CURVE CENTER
BF	BLIND FLANGE
BGS	BELOW GROUND SURFACE
BHP	BRAKE HORSEPOWER
BKR	BREAKER
BLE	BEVEL LARGE END
BM	BEAM
BMP	BEST MANAGEMENT PRACTICE
BOD	BIOCHEMICAL OXYGEN DEMAND
BOP	BOTTOM OF PIPE, BACK OF PIPE
BRK	BREAK
BRZ	BRONZE
BSN	BAR SCREEN
BOT	BOTTOM
BTU	BRITISH THERMAL UNIT
BULKHDS	BULKHEADS
CAB	DIRECT BURIAL CABLE, CABINET
CAF	COMBUSTION AIR FAN
CAP	CAPACITY
CB	CATCH BASIN
CC	COOLING COIL
CCP	CONCRETE CYLINDER PIPE
CCSP	CONCRETE LINED AND COATED STEEL PIPE
CD	CEILING DIFFUSER
CDR	CONDUCTOR
CDU	CONDENSING UNIT
CED	CEILING EXHAUST DIFFUSER
CEM	CEMENT
CER	CEILING EXHAUST REGISTER
CFH	CUBIC FEET PER HOUR
CFM	CUBIC FEET PER MINUTE
CFR	CODE OF FEDERAL REGULATIONS
CFS	CUBIC FEET PER SECOND
CH	CHANNEL
CHR	CHILLER
CI	CAST IRON
CIP	CAST IN PLACE
CJ	CONSTRUCTION JOINT
CK	CHECKER(ED)
CKPL	CHECKER PLATE
CLG	CEILING
CLK	CLOCK
CLO	CHLORINE
CLS	CLASS
CLSM	CONTROLLED LOW STRENGTH MATERIAL
CM	MANUAL CONTROL STATION
CMA	MANUAL–AUTO CONTROL STATION
CMC	CEMENT MORTAR COATED
CML	CEMENT MORTAR LINED
CMP	CORRUGATED METAL PIPE
CMPA	ASBESTOS PROTECTED CORRUGATED METAL PIPE
CND	CONDUIT
CNTL	CONTROL
CO	CLEANOUT
CO2	CARBON DIOXIDE
COD	CHEMICAL OXYGEN DEMAND
COF	COOLING AIR FAN
COL	COLUMN, COLLECTION
COM	COMMINUTOR
COMM	COMMUNICATION
COMPT	COMPARTMENT
CON	CONVEYOR
COND	CONDUCTOR, CONDENSATE
CONF	CONFERENCE
CONT	CONTAINER
CONTD	CONTINUED
CP	CENTER POINT
CPLG	COUPLING
CPP	CORRUGATED PLASTIC PIPE
CPVC	CHLORINATED POLYVINYL CHLORIDE
CR	CONDUIT RACK
CRF	CHEMICAL FEEDER
CSD	CEILING SUPPLY DIFFUSER
CSEC	CONSTRUCTION STORMWATER AND EROSION CONTROL
CSGP	CONSTRUCTION STORMWATER GENERAL PERMIT
CSO	COMBINED SEWER OVERFLOW
CTF	CENTRIFUGE
CTR(D)	CENTER(ED)
CU	CONTROL UNIT, COPPER, CUBIC
CV	CONTROL VALVE, CHECK VALVE
C/W	COMPLETE WITH
CYL	CYLINDER
D	DRYER, DEEP, DRAIN
DB	DUCT BANK
DCVA	DOUBLE CHECK VALVE ASSEMBLY
DDD	DEPARTMENT OF PLANNING AND DEVELOPMENT
DEC	DECREASING
DET	DETAIL
DFD	DUCT FIRE DAMPER
DIAG	DIAGRAM, DIAGONAL
DIFF	DIFFERENTIAL
DIM	DIMENSION
DIR	DIRECTION
DISCH	DISCHARGE
DM	DAMPER MOTOR
DN	DOWN
DR	DRAIN ROCK, DRAINAGE, DOOR
DWD	DRAINAGE AND WASTEWATER DIVISION
DWF	DRY WEATHER FLOW
DWL(S)	DOWEL(S)
EA	EXHAUST AIR
EAT	ENTERING AIR TEMPERATURE
EAU	ENGINE ALTERNATOR UNIT
EC	END OF CURVE
ECC	ECCENTRIC
EE	EACH END
EF	EACH FACE, EXHAUST FAN
EFF	EFFLUENT
EG	EXHAUST GRILLE
EJ	EXPANSION JOINT
ELL	ELBOW
EMBD	EMBEDDED
EMER	EMERGENCY
EOL	ELBOLET
EOP	END OF PIPE
EP	EDGE OF PAVEMENT
E/P	ELECTRIC/PNEUMATIC
EPDM	ETHYLENE PROPYLENE DIENE MONOMER
EPR	EVAPORATOR
EQ	EQUAL
EQL SP	EQUALLY SPACED
EQUIP	EQUIPMENT
EQUIV	EQUIVALENT
ES	EXISTING SURFACE
ESC	EROSION AND SEDIMENTATION CONTROL
EWEF	EACH WAY EACH FACE
EWT	ENTERING WATER TEMPERATURE
EWW	EXTERIOR WASH WATER
EXH	EXHAUST
EXP AB	EXPANSION ANCHOR BOLT
EXP AB	EXPANSION ANCHOR BOLT
EXT	EXTERIOR
F	FAHRENHEIT, FACE, FUSE(D)
FA	FOUL AIR
FAB	FABRICATE(D), FABRICATION
FAI	FRESH AIR INTAKE
FB	FLAT BAR, FLOOR BEAM
FC	FAIL CLOSED, FLEXIBLE COUPLING
FCL	FREE CHLORINE
FCO	FLOOR CLEANOUT
FCR	FINE CRUSHED ROCK
FD	FLOOR DRAIN
FDC	FLEXIBLE DUCT CONNECTOR
FDR	FEEDER
FE	FLOWMETER
FEXT	FIRE EXTINGUISHER
FF	FLAT FACE
F/F	FACE TO FACE
FH	FIRE HYDRANT, FLATHEAD
FHD	FLATHEAD
FIN	FINISHED
FL	FLOW LINE
FLEX	FLEXIBLE
FLG	FLAP GATE
FLP	FLUID POWER UNIT
FLT	FILTER
FM	FORCE MAIN
FMH	FLEXIBLE METAL HOSE
FO	FIBER OPTIC CABLE
FOB	FLAT ON BOTTOM
FOT	FLAT ON TOP
FPC	FLEXIBLE PIPE COUPLING
FPM	FEET PER MINUTE
FPS	FEET PER SECOND
FR	FRAME
FRP	FIBERGLASS REINFORCED PIPE (PLASTIC)
FSL	FLOW SWITCH
FT	FLASH TANK
FUT	FUTURE
FV	FILL VALVE
GBR	GEOTECHNICAL BASELINE REPORT
GBV	GLOBE VALVE
GD	GUARD
GDR	GEOTECHNICAL DATA REPORT
GPD	GALLONS PER DAY
GRT	GROUT
GRTG	GRATING
GSKT	GASKET
GWL	GROUND WATER LEVEL
HAS	HEADED ANCHOR STUD
HB	HOSE BIBB
HC	HEATING COIL
HD	HEAVY DUTY
HDOT	HEAVY DUTY OILTIGHT
HDPE	HIGH DENSITY POLYETHYLENE
HDWR	HARDWARE
HEX	HEXAGONAL
HG	MERCURY, HAND GRADE
HGL	HYDRAULIC GRADE LINE
HHV	HEAT HOSE VALVE
HOA	HAND–OFF–AUTO
HP	HIGH PRESSURE, HIGH POINT, HORSEPOWER
HPT	HIGH POINT
HR	HANDRAIL, HEAT RESERVOIR
HSS	HIGH SIGNAL SELECT
HTL	HALF TIDE LEVEL
HTR	HEATER
HTV	HIGH TEMPERATURE VENT
HV	HAND VALVE
H/V	HEATING AND VENTILATING
HVAC	HEATING, VENTILATING, AND AIR CONDITIONING
HW	HOT WATER
HWTR	HIGH WATER
HYD	HYDRAULIC
HZ	HERTZ (CYCLES PER SECOND)
ID	INSIDE DIAMETER
IL	INDICATING LAMP
INF	INFLUENT
INSUL	INSULATE(D), INSULATION
INST	INSTANTANEOUS
INT	INTERIOR
INTER	INTERMEDIATE
INTLK	INTERLOCK
IP	INTERMEDIATE PRESSURE
IRR	IRRIGATION
IWW	INTERIOR WASH WATER
JCT	JUNCTION
K	KIP (1,000 POUNDS)
KVA	KILOVOLT AMPERE
KVAR	KILOVAR
KW	KILOWATT
L	ANGLE
LAT	LEAVING AIR TEMPERATURE, LATERAL, LATITUDE
LEL	LOWER EXPLOSIVE LIMIT
LEV	LEVEL
LG	LONG
LH	LEFT HAND
LJ	LAP JOINT
LLV	LONG LEG VERTICAL
LO	LUBRICATING OIL
LOS	LOCKOUT STOP
LP	LOW PRESSURE
LPT	LOW POINT
LS	LIMIT SWITCH
LTG	LIGHTING
LV	LOW VOLTAGE
LVR	LOUVER
LWR	LOWER
MA	MILLIAMPERE
MAINT	MAINTENANCE
MAN	MANUAL
MAT'L	MATERIAL
MBH	THOUSAND BTUs PER HOUR
MCC	MOTOR CONTROL CENTER
MCM	THOUSAND CIRCULAR MILLS
MECH	MECHANICAL
MFR	MANUFACTURER
MG	MILLION GALLONS
MGD	MILLION GALLONS PER DAY
MG/L	MILLIGRAMS PER LITER
MGR	MANAGER
MHHW	MEAN HIGH HIGH WATER
MI	MALLEABLE IRON
ML	MILLILITER
MLLW	MEAN LOWER LOW WATER
MLW	MEAN LOW WATER
MO	MOTOR OPERATOR
MOD	MODULUS
MPH	MILES PER HOUR
MSS	MANUFACTURERS STANDARDIZATION SOCIETY
MTBM	MICRO TUNNEL BORING MACHINE
MTL	METAL
MTR	MOTOR
MUL/DIV	MULTIPLY/DIVIDE
MUTCD	MANUAL ON UNIFORM TRAFFIC CONTROL DEVICES
MX	MIXER
N	NEUTRAL
NA	NONAUTOMATIC, NOT APPLICABLE
NaOH	SODIUM HYDROXIDE
NC	NORMALLY CLOSED
NE	NORTHEAST
NEG	NEGATIVE
NEMA	NATIONAL ELECTRICAL MANUFACURERS ASSOCIATION
NF	NONFUSED
NP	NAMEPLATE, NON–POTABLE
NPDES	NATIONAL POLLUTANT DISCHARGE ELIMINATION SYSTEM
NPSH	NET POSITIVE SUCTION HEAD
NRS	NONRISING STEM
NW	NORTHWEST
OA	OVERALL, OUTSIDE AIR
OAI	OUTSIDE AIR INTAKE
OB	OPPOSED BLADE
OCU	ODOR CONTROL UNIT
OD	OUTSIDE DIAMETER
OF	OVERFLOW
OL	OVERLOAD
O/O	OUT TO OUT
OPNG	OPENING
OPP	OPPOSITE
P	PUMP
PAR	PARALLEL, PARAGRAPH
PBE	PLAIN BOTH ENDS
PC	PIPE COUPLING, PRECAST, PIECE
P/C	PLAIN CONCRETE (NO REINFORCING STEEL)
PCC	PLANT CONTROL CENTER
PCHV	PINCH VALVE
PCP	PLAIN CONCRETE PIPE
PCS	PIECES
PC–T	PIPE COUPLING TO TAKE TENSION
PCU	PHOTOELECTRIC CONTROL
PD	PLENUM DRAIN
PE	PERMANENT EASEMENT, POLYETHYLENE
P/E	PNEUMATIC/ELECTRIC
PEN	PENETRATION
PERF	PERFORATED
PF	POWER FACTOR
PH	POT HOLE
PK	PEAK
PL	PIPELINE, PROPERTY LINE
PLCS	PLACES
PLE	PLAIN LARGE END
PNEU	PNEUMATIC
PNL	PANEL, PANELBOARD
PNT	PAINT
PO4	PHOSPHATE
POC	POINT OF CONNECTION
POE	PLAIN ONE END
PRD	PRESSURE RELIEF DAMPER
PRES	PRESSURE
PREFIN	PREFINISHED
PRS	PRESSURE REDUCING STATION
PRV	PRESSURE REGULATING (REDUCING) (RELIEF) VALVE
PS	PIPE SUPPORT, PIPE SEWER COMBINED
PSD	PIPE STORM DRAIN
PSE	PLAIN SMALL END
PSF	POUNDS PER SQUARE FOOT
PSIA	POUNDS PER SQUARE INCH ABSOLUTE
PSIG	POUNDS PER SQUARE INCH GAGE
PSL	PIPE SLEEVE
PT	POINT
PV	PLUG VALVE
PVC	POLYVINYL CHLORIDE
PVI	POINT OF VERTICAL INTERSECTION
PVL	PRESSURE VESSEL
PVT	PAVEMENT
Q	RATE OF FLOW
QCPL	QUICK COUPLING
R	RISER
RA	RETURN AIR
RAD	RADIUS
RAF	ROLL TYPE AIR FILTER
R/C	REINFORCED CONCRETE
RC	RESTRAINED COUPLING
RCDR	RECORDER
RD	ROUND
RECT	RECTANGLE
RF	RAISED FACE
RFCA	RESTRAINED FLANGED COUPLING ADAPTER
REC	RECEIVER, RECESSED
RECD	RECEIVED
RECEPT	RECEPTIONIST
RECIRC	RECIRCULATION
RECP	RECEPTACLE
REG	REGULATOR
REL	RELAY
REM	REMOVE, REMOVABLE
RESIL	RESILIENT
RG	RETURN GRILLE
RH	RIGHT HAND
RL	REDUCED LEVEL
RM	ROOM
RO	ROUGH OPENINGS
RP	RADIUS POINT
RPBA	REDUCED PRESSURE BACKFLOW ASSEMBLY
RPBP	REDUCED PRESSURE BACKFLOW PREVENTER
RPM	REVOLUTIONS PER MINUTE
RTRP	REINFORCED THERMOSET PLASTIC
RTU	REMOTE TERMINAL UNIT
RV	RELIEF VALVE
RWL	RAINWATER LEADER
RWP	RAINWATER PIPE
S	SOLENOID VALVE SLOPE
SA	SUPPLY AIR
SB	SIGNAL BOX
SC#	SURVEY CONTROL POINT
SCFM	STANDARD CUBIC FEET PER MINUTE
SCRD	SCREWED
SD	SERVICE DRAIN
SDT	SMOKE DETECTOR, SANITARY DRAIN, STORM DRAIN TEMPORARY STORM DRAIN
SE	SOUTHEAST
SEC	SECOND
SEL	SELECTOR
SEP	SEPARATOR
SF	SQUARE FOOT, SUPPLY FAN
SG	SLUICE GATE
SI	SPEED INCREASER
SIM	SIMILAR
SL	SLOPE
SLG	SLIDE GATE
SN	SCREEN
SO2	SULFUR DIOXIDE
SOL	SOCKOLET
SP	SPACE, SET POINT, STATIC PRESSURE, STOP
SO	SLIP–ON
SPD	SUMP PUMP DISCHARGE
SPG	SPACING
SPL	SPLICE
SQ	SQUARE
SR	SPEED REDUCER, STATE ROUTE
SRG	SPLIT–RANGING
SRV	SAFETY RELIEF VALVE
SS	SPEED SELECTOR, SUSPENDED SOLIDS
SSC	SOLID STATE CONTROLLER
SSD	SUB–SURFACE DRAIN
SSFH	STAINLESS STEEL FLAT HEAD
SSPE	SUBSURFACE PERMANENT EASEMEMT
ST	START
STGA	STARTING AIR
STOR	STORAGE
STR	STRONG
STW	STEEL WRAPPED
SUB	SUBSTITUTE
SUPERV	SUPERVISOR
SUPT	SUPPORT
SURF	SURFACE
SUSP	SUSPENDED
SV	SOLENOID VALVE
SW	SOUTHWEST, SOCKET WELD
SWB	SWITCHBOARD
SWGR	SWITCHGEAR, SWAGE
SWPPP	STORM WATER POLLUTION PREVENTION PLAN
SYM	SYMMETRICAL, SYMBOL
T	TRAP, TOP, TANK
TA	TRANSFER AIR, TREATED AIR
TB	TERMINAL BOX
TBF	TIPPING BUCKET FILL
T&B	TOP & BOTTOM
T/B	TOP OF BANK
T/C	TOP OF CURB
TCE	TEMPORARY CONSTRUCTION EASEMENT
TCL	TOTALLY CLOSED
TCP	TEMPERATURE CONTROL PANEL
TD	TIME DELAY RELAY, TANK DRAIN
TDH	TOTAL DYNAMIC HEAD
TE	TOTALLY ENCLOSED
TEMP	TEMPERED
TFR	TRANSFORMER
TH	THERMOMETER
THD'D	THREADED
THK	THICK
THRU	THROUGH
TLE	THREAD LARGE END
TOA	TEST–OFF–AUTO
TOC	TOP OF CONCRETE
TOE	THREADED ONE END
TOL	THREDOLET
TOP	TOP OF PIPE
TOS	TOP OF STEEL, TOP OF SLAB
TP	TANGENT POINT, TRAP PRIMER TOPPING
TPLX	TRIPLEXED
TR	TIMING RELAY, STAIR TREAD
TRANS	TRANSFORMER
TSE	THREADED SMALL END
TV	THERMOSTATIC VALVE
TW	THERMOWELL
UN	UNION
UNO	UNLESS NOTED OTHERWISE
UPARR	URBAN PARK AND RECREATION RECOVERY
U/S	UNDERSIDE
V	VENT, VOLTS, VERTICAL
VAC	VACUUM
VD	VOLUME DAMPER, VAULT DRAIN
VFT	VACUUM FILTER
VP	VAPOR PRESSURE, VACUUM PUMP
VPI	VERTICAL POINT OF INTERSECTION
VSC	VARIABLE SPEED COUPLING
VT	VENT
VTR	VENT THROUGH ROOF
VV	VARIABLE VOLUME BOX
W	WIDE, WATER
WAC	WASHINGTON ADMINISTRATIVE CODE
WC	WATER COLUMN
WCO	CLEANOUT
WF	WIDE FLANGE
WG	WASTE GAS
WI	WROUGHT IRON
W/O	WITHOUT
WOL	WELDOLET
WP	WORKING POINT
WS	WATER SURFACE
WSDOT	WASHINGTON STATE DEPT OF TRANSPORTATION
WSP	WELDED STEEL PIPE
WSR	WALL SUPPLY REGISTER, WASHER
WSTP	WATERSTOP
WT	WATERTIGHT, WEIGHT
WWF	WET WEATHER FLOW
X	SPARE CONDUIT (SUFFIX LETTER)
XLP	CROSS LINKED POLYETHYLENE
YCO	YARD CLEANOUT
YD	YARD DRAIN, YARDS
YR	YEAR
&	AND
@	AT
ø	DIAMETER, PHASE
=	EQUAL
(–)	MINUS
#	NUMBER, POUNDS
%	PERCENT
+	PLUS

NOTES:

1. ADDITIONAL ABBREVIATIONS ARE IN ACCORDANCE WITH CITY OF SEATTLE 2011 STANDARD PLANS FOR MUNICIPAL CONSTRUCTION, STANDARD PLAN NO. 002a THROUGH 002f.
2. ADDITIONAL ABBREVIATIONS FOR ELECTRICAL AND INSTRUMENTATION AND CONTROLS ARE INCLUDED ON SHEET 122 AND 144 RESPECTIVELY.
3. AN ABBREVIATION MAY HAVE MULTIPLE MEANINGS AND ALL LISTS SHALL BE REVIEWED TO DETERMINE APPROPRIATE MEANING.

CSO FACILITY 8A AND CSO FACILITY 29A–STANDARD ABBREVIATIONS

MUP SUBMITTAL

VAULT SERIAL NO.	DATE	MARK	NATURE REVISIONS	MADE	CHK'D	REV'D

HDR Engineering, Inc.

CH2MHILL

REVIEWED BY SPU/WATER ENGINEERING ..... 20.....
REVIEWED BY SPU/DRAINAGE ..... 20.....
APPROVED BY SDOT STREET IMPROVEMENT PERMITTING ..... 20.....

APPROVED FOR ADVERTISING
NANCY LOCKE
DEPARTMENT OF FINANCE & ADMINISTRATIVE SERVICES
SEATTLE, WASHINGTON 20
BY: PURCHASING & CONTRACTING SERVICES DIRECTOR

NAME OR INITIALS AND DATE
DESIGNED XD–10/25/13
CHECKED BOB–11/01/13
DRAWN PCW–10/25/13
CHECKED BOB–11/01/13

INITIALS AND DATE
REVIEWED:
DES. CONST.
SDOT PROJ. MGR.
RECEIVED
REVISED AS BUILT

ALL WORK SHALL BE DONE IN ACCORDANCE WITH THE CITY OF SEATTLE STANDARD PLANS AND SPECIFICATIONS AND OTHER DOCUMENTS CALLED FOR IN SECTION 0–02.3 OF THE PROJECT MANUAL.

ERIC C.M. BERGSTROM STATE OF WASHINGTON 27347 REGISTERED PROFESSIONAL ENGINEER

Seattle Public Utilities
City of Seattle
Ray Hoffman, Director
ORDINANCE NO. APPROVED
FUND:
SCALE: NONE INSPECTOR'S BOOK

HENDERSON NORTH CSO REDUCTION

JOB NO. PC C304102 R/W CO C304102
VAULT PLAN NO.
SHEET 006 OF 320

C:\pwworking\sea\d0883917\006 C304102–P–Notes–440003.dwg
pwitkem Nov–20–13 5:24pm

POINT TABLE (X)

POINT #	NORTHING	EASTING	DESCRIPTION
1	203381.23	1288747.71	INTERSECTION OF GRIDLINES* A & 1
2	203199.63	1288703.08	INTERSECTION OF GRIDLINES A & 11
3	203177.82	1288696.18	INTERSECTION OF GRIDLINES A' & 12
4	203047.38	1288645.33	INTERSECTION OF GRIDLINES A' & 20
5	203554.67	1288748.31	TEMPORARY BENCH MARK EL. 28.52
6	203361.88	1288683.43	TEMPORARY BENCH MARK EL. 26.21

* FOR STRUCTURAL GRIDLINES SEE SHEETS 073–075.

NOTES:

1. FOR PARKING LOT AND WALL DIMENSIONS SEE SHEETS 018A–018C.
2. FOR GRADING SEE SHEETS 019B–019C.
3. FOR TENNIS COURT DIMENSIONS SEE SHEET 020A.
4. FOR STORM DRAINAGE SYSTEM LOCATIONS SEE SHEET 024.
5. FOR SEWER DIVERSION LOCATIONS SEE SHEET 028.
6. FOR EFFLUENT CONTROL STRUCTURE LOCATION SEE SHEET 032A.
7. FOR INFLUENT CONTROL STRUCTURE LOCATION SEE SHEET 032.
8. FOR LAKE LINE CONTROL VAULT SEE SHEET 032B.
9. FOR OUTFALL LOCATIONS SEE SHEET 036.
10. FOR SHORELINE ENHANCEMENT LOCATION SEE SHEET 044.

PROJECT SPECIFIC SITE LEGEND

SEE COS STANDARD PLAN 003 FOR STANDARD SYMBOLS, HATCHES, AND LINETYPES.

- ASPHALT PARKING
- ASPHALT TENNIS COURT
- CONCRETE WALKWAY
- CONCRETE REINFORCED TURF PAVING
- CONCRETE DRIVEWAY
- ASPHALT PARKING REMOVAL
- CONCRETE WALKWAY REMOVAL
- LIMITS OF CONSTRUCTION
- VEGETATION PROTECTION FENCE
- SECANT PILES. SEE SHEETS 300–320
- CURB & GUTTER
- VERTICAL CURB

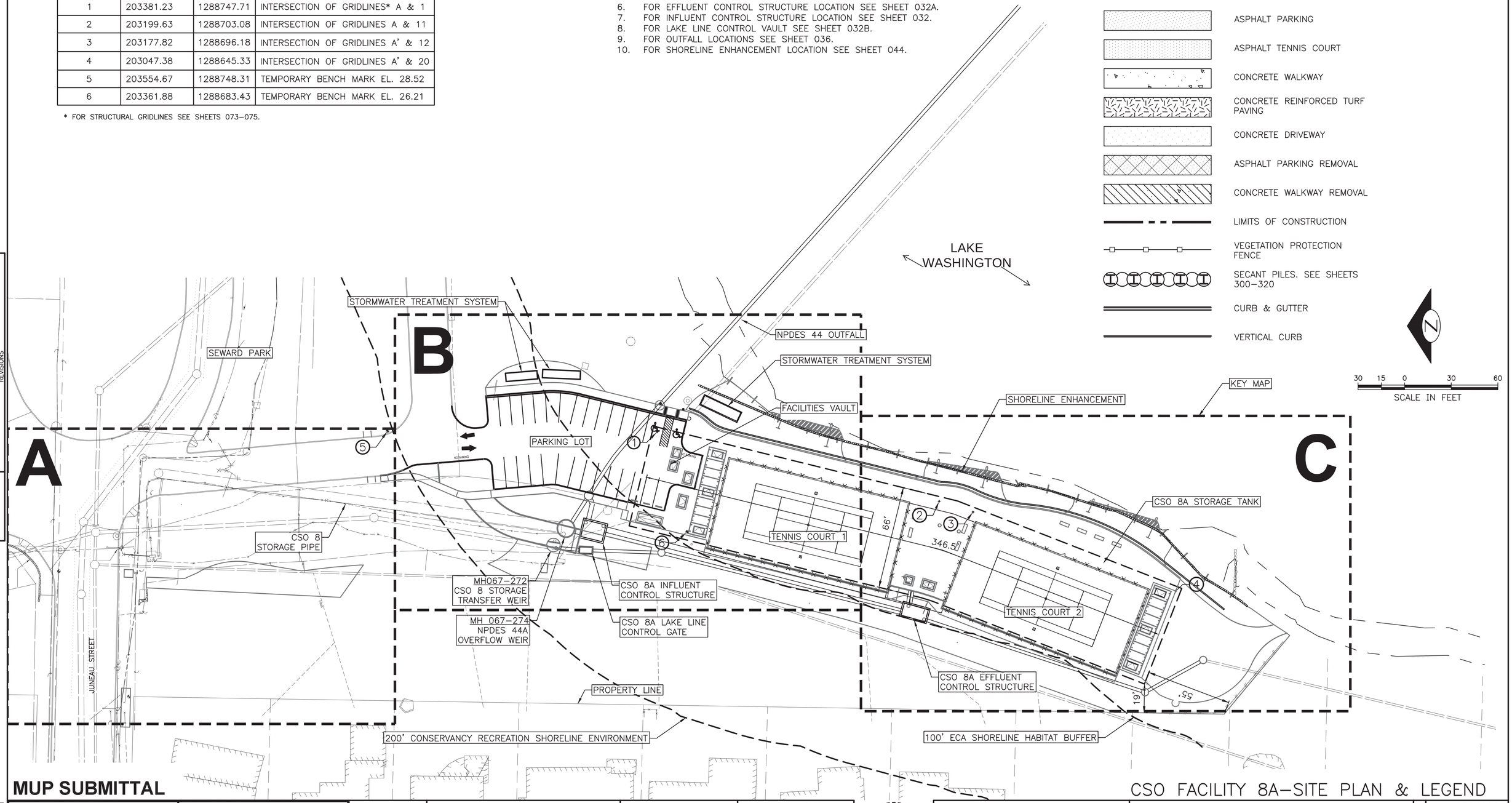

VAULT SERIAL NO.	DATE	MARK	NATURE REVISIONS	MADE	CHK'D	REV'D

MUP SUBMITTAL

CSO FACILITY 8A–SITE PLAN & LEGEND

HDR Engineering, Inc.

LPD engineering pllc — 911 Western Ave, Suite 420, Seattle, WA 98104, p. 206.725.1211, f. 206.973.5344, www.lpdengineering.com

0 ½ 1 — IF THIS BAR DOES NOT MEASURE 1" THEN DRAWING IS NOT PLOTTED TO ORIGINAL SCALE.

APPROVED FOR ADVERTISING
NANCY LOCKE
DEPARTMENT OF FINANCE & ADMINISTRATIVE SERVICES
SEATTLE, WASHINGTON 20
BY: PURCHASING & CONTRACTING SERVICES DIRECTOR

NAME OR INITIALS AND DATE: DESIGNED, CHECKED, DRAWN, CHECKED

INITIALS AND DATE: REVIEWED: DES. CONST. SDOT PROJ. MGR.; RECEIVED; REVISED AS BUILT

ALL WORK SHALL BE DONE IN ACCORDANCE WITH THE CITY OF SEATTLE STANDARD PLANS AND SPECIFICATIONS AND OTHER DOCUMENTS CALLED FOR IN SECTION 0–02.3 OF THE PROJECT MANUAL.

LAURIE J. PEARR — STATE OF WASHINGTON — 30766 — REGISTERED PROFESSIONAL ENGINEER

Seattle Public Utilities — City of Seattle — Ray Hoffman, Director

ORDINANCE NO. APPROVED
FUND:
SCALE: AS NOTED INSPECTOR'S BOOK

HENDERSON NORTH CSO REDUCTION

JOB NO. PC C304102 R/W CO C304102
VAULT PLAN NO.
SHEET 013 OF 320

C:\pwworking\sea\d0883918\013 C304102-P-SITE-44C001.dwg
jims Dec-04-13 2:31pm

TEMPORARY EROSION AND SEDIMENT CONTROL:
UNLESS OTHERWISE NOTED:

1. THE IMPLEMENTATION OF TEMPORARY EROSION AND SEDIMENTATION CONTROL (TESC) MEASURES AND THE CONSTRUCTION, MAINTENANCE, AND REPLACEMENT OF THESE FACILITIES IS THE RESPONSIBILITY OF THE CONTRACTOR.

2. THE TESC FACILITIES MUST BE CONSTRUCTED IN CONJUNCTION WITH ALL CONSTRUCTION ACTIVITIES AND IN SUCH A MANNER AS TO ENSURE THAT SEDIMENT LADEN WATER DOES NOT ENTER THE PUBLIC DRAINAGE SYSTEM OR FLOW OFF SITE.

3. THE TESC FACILITIES ARE THE MINIMUM REQUIREMENTS FOR ANTICIPATED SITE CONDITIONS. DURING THE CONSTRUCTION PERIOD, THESE TESC FACILITIES SHALL BE UPGRADED BY CONTRACTOR AS NEEDED FOR UNEXPECTED STORM EVENTS.

4. THE TESC FACILITIES SHALL BE INSPECTED DAILY BY THE CONTRACTOR AND MAINTAINED AS NECESSARY OR AS DIRECTED BY THE ENGINEER TO ENSURE CONTINUOUS FUNCTIONING.

5. ANY AREA STRIPPED OF VEGETATION WHERE NO FURTHER WORK IS ANTICIPATED FOR A PERIOD OF 15 DAYS SHALL BE IMMEDIATELY STABILIZED WITH APPROVED TESC METHODS SUCH AS MULCHING, EROSION BLANKETS, PLASTIC SHEETING OR AS APPROVED BY THE ENGINEER.

6. STABILIZED CONSTRUCTION ENTRANCES SHALL BE INSTALLED AT THE BEGINNING OF CONSTRUCTION AND MAINTAINED FOR THE DURATION OF THE PROJECT. ADDITIONAL MEASURES MAY BE REQUIRED TO INSURE THAT ALL PAVED AREAS ARE KEPT CLEAN FOR THE DURATION OF THE PROJECT.

7. ALL CATCH BASINS IN THE VICINITY OF CONSTRUCTION SHALL BE PROTECTED WITH FILTER FABRIC PLACED BETWEEN THE FRAME AND GRATE OR AS APPROVED. CLEAN REGULARLY: NO MORE THAN 1 INCH OF SEDIMENT WILL BE ALLOWED TO ACCUMULATE OVER FILTER FABRIC.

CONSTRUCTION STORMWATER CONTROL (CSC):
UNLESS OTHERWISE NOTED:

THIS PLAN IS REQUIRED FOR ALL PROJECTS WITH GREATER THAN 750 SQUARE FEET OF LAND DISTURBING ACTIVITIES.

A FIRST GROUND DISTURBANCE INSPECTION IS REQUIRED PRIOR TO START OF WORK ON ALL SITES WITH LAND DISTURBING ACTIVITY.

SCHEDULE A FIRST GROUND DISTURBANCE INSPECTION FOR AN ISSUED BUILDING PERMIT AT 206–684–8900 OR ONLINE AT WWW.SEATTLE.GOV/DPD.

TEMPORARY AND PERMANENT BEST MANAGEMENT PRACTICES (BMPS) SHALL BE USED TO ACCOMPLISH THE FOLLOWING MINIMUM REQUIREMENTS. ADDITIONAL BMPS ARE REQUIRED WHEN MINIMUM CONTROLS ARE NOT SUFFICIENT TO PREVENT EROSION OR TRANSPORT OF SEDIMENT OR OTHER POLLUTANTS FROM THE SITE.

- MARK CLEARING LIMITS
- DELINEATE ENVIRONMENTALLY CRITICAL AREAS
- RETAIN TOP LAYER AND NATIVE VEGETATION
- ESTABLISH CONSTRUCTION ACCESS
- PROTECT DOWNSTREAM PROPERTIES AND RECEIVING WATERS
- PREVENT EROSION AND SEDIMENT TRANSPORT FROM THE SITE
- STABILIZE SOILS
- PROTECT SLOPES
- PROTECT STORM DRAINS
- STABILIZE CHANNEL AND OUTLETS
- CONTROL POLLUTANTS
- CONTROL DEWATERING
- MAINTAIN AND INSPECT BMPS
- EXECUTE CONSTRUCTION STORMWATER CONTROL PLAN
- MINIMIZE OPEN TRENCHES
- PHASE THE PROJECT
- INSTALL PERMANENT FLOW CONTROL AND WATER QUALITY FACILITIES

COMPLETE CONSTRUCTION STORMWATER CONTROL BMP DETAILS AND REQUIREMENTS ARE LOCATED IN DR 16–2009 VOLUME 2, CHAPTER 4 OF THE CONSTRUCTION STORMWATER CONTROL TECHNICAL REQUIREMENTS MANUAL. SHOW ALL BMPS ON THIS PLAN SHEET THAT WILL BE USED TO ACHIEVE THE REQUIREMENTS ABOVE.

SITE PREPARATION NOTES:
UNLESS OTHERWISE NOTED:

1. TEMPORARY FENCING SHOWN DIAGRAMMATICALLY. MAKE ADJUSTMENTS AS DIRECTED BY THE CITY TO MEET THE INTENT.

2. PROVIDE COMPLETE AND CONTINUOUS PROTECTION TO THE ROOT ZONES OF ADJACENT TREES TO REMAIN. PROVIDE SILTATION PROTECTION IN THE FORM OF CLEAN STRAW BALES OR SILTATION FENCING TO PREVENT THE TRANSPORT AND ACCUMULATION OF SILT–LADEN RUNOFF ONTO ROOTS. UTILIZE STRAW BALES WHERE WHERE SILT FENCING WOULD INTERRUPT ROOT ZONES.

3. STORAGE OF EQUIPMENT AND MATERIALS SHALL BE ALLOWED ONLY IN AREAS DESIGNATED BY PARKS USE PERMITS. UNDER NO CIRCUMSTANCES ARE MATERIALS TO BE STORED IN PUBLIC USE AREAS OF THE PARKS PROPERTY, WITHIN 20' OF THE DRIP LINE OF A TREE, OR IN AN AREA THAT COULD RESULT IN DAMAGE OF EXISTING UNDERGROUND ELEMENTS TO REMAIN WHICH COULD BE DAMAGED FROM THE COMPACTION RESULTING FROM THE STORED ITEMS.

VAULT SERIAL NO.	DATE	MARK	NATURE REVISIONS	MADE	CHK'D	REV'D

C:\pwworking\sea\d0838318\014 C304102–P–EROS–440002.dwg
dianneb Nov–20–13 8:17am

MUP SUBMITTAL

CSO FACILITY 8A–EROSION CONTROL NOTES

HDR Engineering, Inc.

LPD engineering pllc — 911 Western Ave, Suite 420, Seattle, WA 98104, p. 206.725.1211, f. 206.973.5344, www.lpdengineering.com

0 ½ 1 — IF THIS BAR DOES NOT MEASURE 1" THEN DRAWING IS NOT PLOTTED TO ORIGINAL SCALE.

APPROVED FOR ADVERTISING
NANCY LOCKE
DEPARTMENT OF FINANCE & ADMINISTRATIVE SERVICES
SEATTLE, WASHINGTON 20
BY: PURCHASING & CONTRACTING SERVICES DIRECTOR

NAME OR INITIALS AND DATE: DESIGNED, CHECKED, DRAWN, CHECKED

INITIALS AND DATE: REVIEWED: DES. CONST. SDOT PROJ. MGR.; RECEIVED; REVISED AS BUILT

ALL WORK SHALL BE DONE IN ACCORDANCE WITH THE CITY OF SEATTLE STANDARD PLANS AND SPECIFICATIONS AND OTHER DOCUMENTS CALLED FOR IN SECTION 0–02.3 OF THE PROJECT MANUAL.

LAURIE J. PEARR — STATE OF WASHINGTON — 30766 — REGISTERED PROFESSIONAL ENGINEER

Seattle Public Utilities — City of Seattle — Ray Hoffman, Director
ORDINANCE NO. APPROVED
FUND:
SCALE: NONE INSPECTOR'S BOOK

HENDERSON NORTH CSO REDUCTION

JOB NO. PC C304102 R/W CO C304102
VAULT PLAN NO.
SHEET 014 OF 320

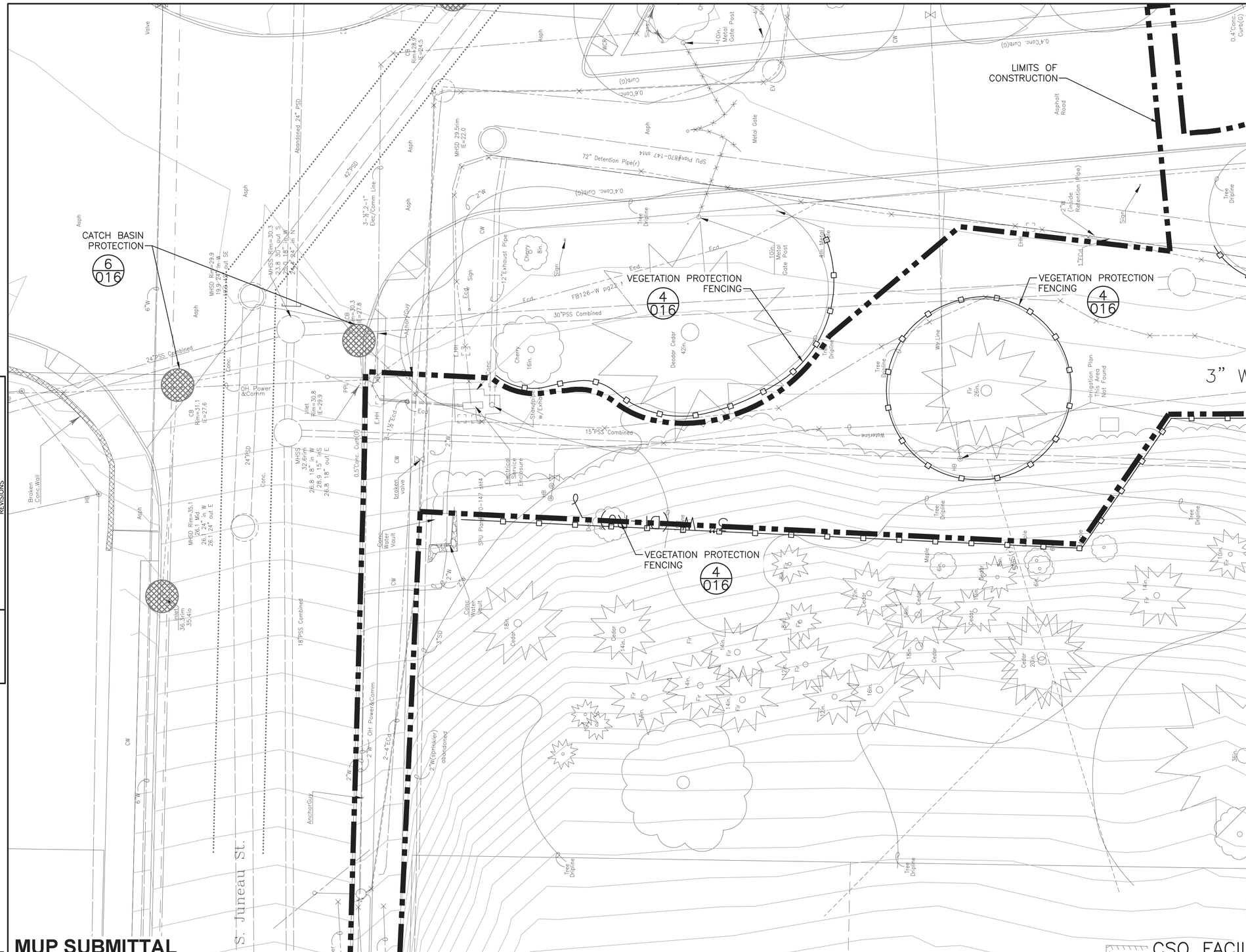

KEY MAP

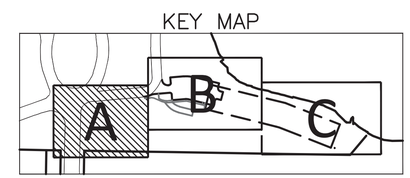

MUP SUBMITTAL

CSO FACILITY 8A–TESC PLAN–SHEET 1 OF 3

VAULT SERIAL NO.	DATE	MARK	NATURE REVISIONS	MADE	CHK'D	REV'D

HDR Engineering, Inc.

LPD engineering pllc
911 Western Ave
Suite 420
Seattle, WA 98104
p. 206.725.1211
f. 206.973.5344
www.lpdengineering.com

0 ½ 1
IF THIS BAR DOES NOT MEASURE 1" THEN DRAWING IS NOT PLOTTED TO ORIGINAL SCALE.

APPROVED FOR ADVERTISING
NANCY LOCKE
DEPARTMENT OF FINANCE & ADMINISTRATIVE SERVICES
SEATTLE, WASHINGTON 20
BY:
PURCHASING & CONTRACTING SERVICES DIRECTOR

NAME OR INITIALS AND DATE
DESIGNED JAS
CHECKED NFH
DRAWN DMB
CHECKED NFH

INITIALS AND DATE
REVIEWED:
DES. CONST.
SDOT PROJ. MGR.
RECEIVED
REVISED AS BUILT

ALL WORK SHALL BE DONE IN ACCORDANCE WITH THE CITY OF SEATTLE STANDARD PLANS AND SPECIFICATIONS AND OTHER DOCUMENTS CALLED FOR IN SECTION 0-02.3 OF THE PROJECT MANUAL.

LAURIE J. PEAKE
STATE OF WASHINGTON
30786
REGISTERED PROFESSIONAL ENGINEER

Seattle Public Utilities
City of Seattle
Ray Hoffman, Director
ORDINANCE NO.
FUND:
SCALE: 1"=10'
APPROVED
INSPECTOR'S BOOK

HENDERSON NORTH CSO REDUCTION

JOB NO. PC C304102
R/W
CO C304102
VAULT PLAN NO.
SHEET 015A OF 320

C:\pwworking\sea\d0983918\015A C304102-P-EROS-440003A.dwg
dlamb Nov-20-13 8:19am

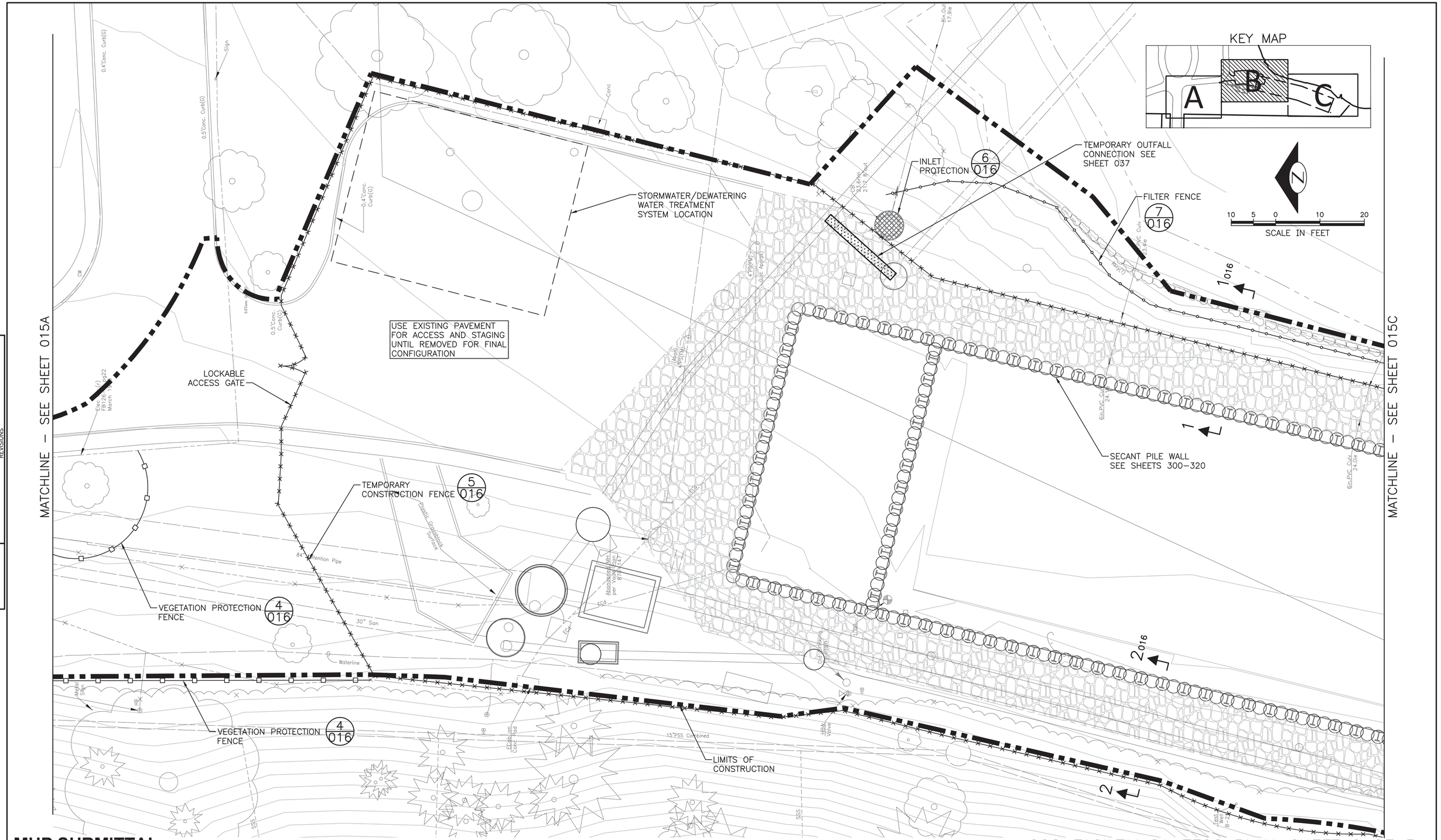

VAULT	SERIAL NO.	DATE	MARK	MADE	CHK'D	REV'D

NATURE:
REVISIONS

C:\pwworking\sea\d0863918\015B C304102-P-EROS-440003B.dwg
diamab Nov-20-13 8:26am

MUP SUBMITTAL

CSO FACILTIY 8A–TESC PLAN–SHEET 2 OF 3

HDR Engineering, Inc.

LPD engineering pllc
911 Western Ave
Suite 420
Seattle, WA 98104
p. 206.725.1211
f. 206.973.5344
www.lpdengineering.com

0 ½ 1
IF THIS BAR DOES NOT MEASURE 1" THEN DRAWING IS NOT PLOTTED TO ORIGINAL SCALE.

APPROVED FOR ADVERTISING
NANCY LOCKE
DEPARTMENT OF FINANCE & ADMINISTRATIVE SERVICES
SEATTLE, WASHINGTON 20
BY:
PURCHASING & CONTRACTING SERVICES DIRECTOR

NAME OR INITIALS AND DATE
DESIGNED JAS
CHECKED NFH
DRAWN SBN
CHECKED NFH

INITIALS AND DATE
REVIEWED:
DES. CONST.
SDOT PROJ. MGR.
RECEIVED
REVISED AS BUILT

ALL WORK SHALL BE DONE IN ACCORDANCE WITH THE CITY OF SEATTLE STANDARD PLANS AND SPECIFICATIONS AND OTHER DOCUMENTS CALLED FOR IN SECTION 0-02.3 OF THE PROJECT MANUAL.

LAURIE J. PEARR
STATE OF WASHINGTON
30766
REGISTERED PROFESSIONAL ENGINEER

Seattle Public Utilities
City of Seattle
Ray Hoffman, Director
ORDINANCE NO.
FUND:
SCALE: 1"=10'
APPROVED
INSPECTOR'S BOOK

HENDERSON NORTH CSO REDUCTION

JOB NO. PC C304102
R/W
CO C304102
VAULT PLAN NO.
SHEET 015B OF 320

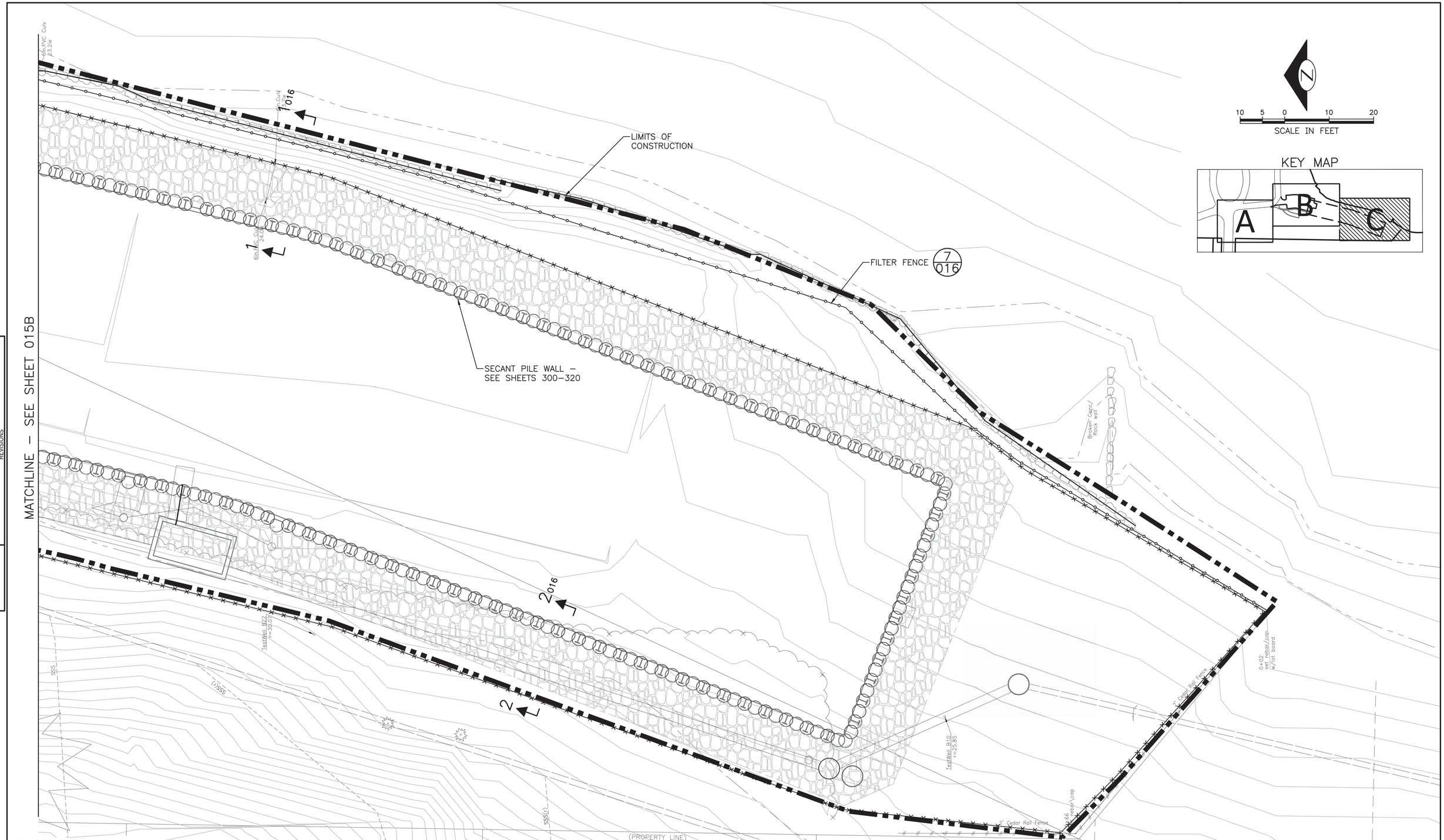

VAULT SERIAL NO.	DATE	MARK	NATURE REVISIONS	MADE	CHK'D	REV'D

C:\pwworking\sea\d0983918\015C C304102-P-EROS-44C003C.dwg
dumeb Nov-20-13 8:22am

MUP SUBMITTAL

CSO FACILITY 8A–TESC PLAN–SHEET 3 OF 3

HDR Engineering, Inc.

LPD engineering pllc
911 Western Ave
Suite 420
Seattle, WA 98104
p. 206.725.1211
f. 206.973.5344
www.lpdengineering.com

0 ½ 1
IF THIS BAR DOES NOT MEASURE 1" THEN DRAWING IS NOT PLOTTED TO ORIGINAL SCALE.

APPROVED FOR ADVERTISING
NANCY LOCKE
DEPARTMENT OF FINANCE & ADMINISTRATIVE SERVICES
SEATTLE, WASHINGTON 20
BY:
PURCHASING & CONTRACTING SERVICES DIRECTOR

NAME OR INITIALS AND DATE	INITIALS AND DATE
DESIGNED JAS	REVIEWED: DES. CONST. SDOT PROJ. MGR.
CHECKED NFH	
DRAWN SBN	RECEIVED
CHECKED NFH	REVISED AS BUILT

ALL WORK SHALL BE DONE IN ACCORDANCE WITH THE CITY OF SEATTLE STANDARD PLANS AND SPECIFICATIONS AND OTHER DOCUMENTS CALLED FOR IN SECTION 0-02.3 OF THE PROJECT MANUAL.

LAURIE J. PEARR
STATE OF WASHINGTON
30766
REGISTERED
PROFESSIONAL ENGINEER

Seattle Public Utilities
City of Seattle
Ray Hoffman, Director
ORDINANCE NO.
FUND:
SCALE: 1"=10'
APPROVED
INSPECTOR'S BOOK

HENDERSON NORTH CSO REDUCTION

JOB NO. PC C304102
R/W
CO C304102
VAULT PLAN NO.
SHEET 015C OF 320

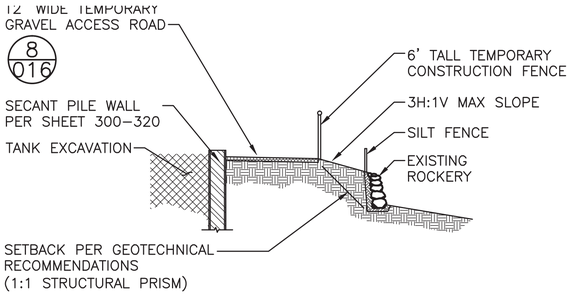

EAST CONSTRUCTION ACCESS 1/016
NTS

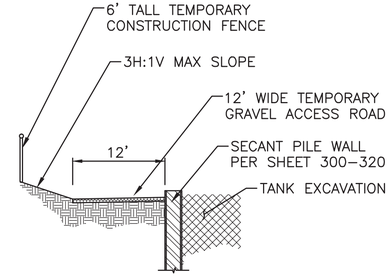

WEST CONSTRUCTION ACCESS 2/016
NTS

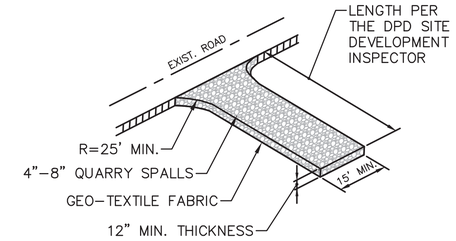

STABILIZED ACCESS SHALL BE USED IN ALL AREAS OF THE SITE WITH VEHICLE TRAFFIC AND PARKING, INCLUDING PLANTING STRIPS.

STABILIZED CONSTRUCTION ACCESS 3/016
NTS

VEGETATION AND TREE FENCING SHALL BE A MINIMUM OF 4' HIGH ORANGE POLYETHYLENE LAMINAR SAFETY NETTING

NOTES:

1. 3-INCH WOOD CHIP MULCH MAY BE ADDED FOR ROOT PROTECTION WITHIN FENCED AREA.
2. OUTSIDE OF PROTECTIVE FENCING AREA, PROTECT ROOTS 2-INCHES OR LARGER IN DIAMETER BY USING HAND EXCAVATION TECHNIQUES.
3. MINIMIZE CONSTRUCTION ZONE: PROTECT VEGETATION OUTSIDE CONSTRUCTION ZONE BY SEGREGATING IT WITH HIGH VISIBILITY CONSTRUCTION FENCING.

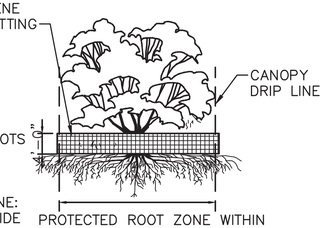

VEGETATION PROTECTION 4/016
NTS

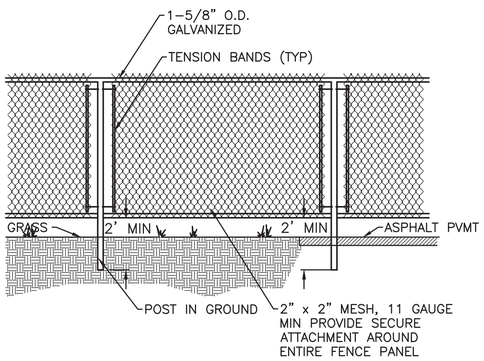

CONSTRUCTION FENCING 5/016
NTS

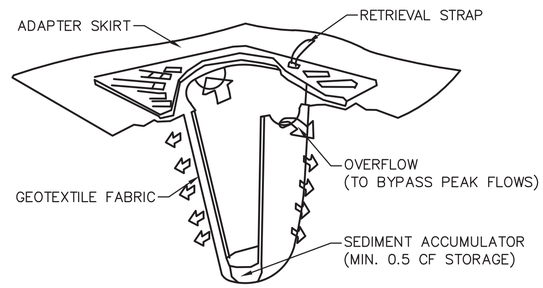

SCHEMATIC DETAIL

PROVIDE "STREAMGUARD SEDIMENT CATCH BASIN INSERT" OR APPROVED EQUAL
MANUFACTURER'S NAME: BOWHEAD ENVIRONMENTAL & SAFETY
ADDRESS: P.O. BOX 375 PRESTON, WA 98050
TELEPHONE: FOR INFORMATION: (800) 909-3677
WWW.SHOPBOWHEAD.COM

CATCH BASIN PROTECTION 6/016
NTS

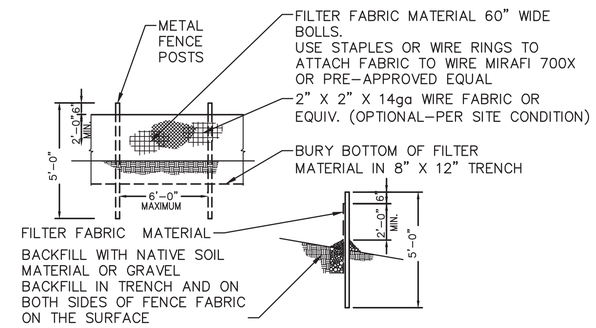

NOTE: ANGLE SILT FENCE BACK UP THE SLOPE AT THE END OF RUN.

SYMBOL:

FILTER FENCE 7/016
NTS

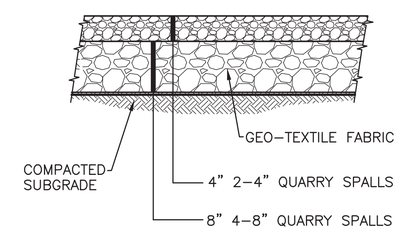

GRAVEL ACCESS ROAD 8/016
NTS

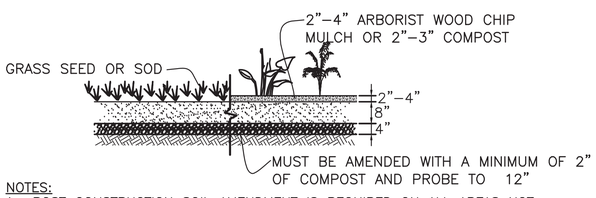

NOTES:

1. POST CONSTRUCTION SOIL AMENDMENT IS REQUIRED ON ALL AREAS NOT COVERED BY IMPERVIOUS SURFACE WHERE SOIL IS DISTURBED DURING CONSTRUCTION.
2. SOIL AMENDMENT CALCULATIONS SHALL BE SHOWN ON THE POST-CONSTRUCTION COMPOST CALCULATION WORKSHEET.
3. SOIL AMENDMENT MUST PASS A 12 INCH MINIMUM PROBE TEST.

SYMBOL: T1 P1 T2 AND/OR P2

SOIL AMENDMENT 9/016
NTS

MUP SUBMITTAL

CSO FACILITY 8A-TESC DETAILS AND SECTIONS

HDR Engineering, Inc.	LPD engineering pllc, 911 Western Ave, Suite 420, Seattle, WA 98104, p. 206.725.1211, f. 206.973.5344, www.lpdengineering.com	0 ½ 1 IF THIS BAR DOES NOT MEASURE 1" THEN DRAWING IS NOT PLOTTED TO ORIGINAL SCALE.	APPROVED FOR ADVERTISING NANCY LOCKE, DEPARTMENT OF FINANCE & ADMINISTRATIVE SERVICES, SEATTLE, WASHINGTON 20, BY: PURCHASING & CONTRACTING SERVICES DIRECTOR	NAME OR INITIALS AND DATE: DESIGNED JAS; CHECKED NFH; DRAWN DMB; CHECKED NFH. INITIALS AND DATE: REVIEWED: DES. CONST. SDOT PROJ. MGR.; RECEIVED; REVISED AS BUILT. ALL WORK SHALL BE DONE IN ACCORDANCE WITH THE CITY OF SEATTLE STANDARD PLANS AND SPECIFICATIONS AND OTHER DOCUMENTS CALLED FOR IN SECTION 0-02.3 OF THE PROJECT MANUAL.	LAURIE J. PEARR, STATE OF WASHINGTON, 30766, REGISTERED PROFESSIONAL ENGINEER

Seattle Public Utilities — City of Seattle, Ray Hoffman, Director
ORDINANCE NO. APPROVED
FUND:
SCALE: H. 1"=20', V. 1"=10' INSPECTOR'S BOOK

HENDERSON NORTH CSO REDUCTION

JOB NO. PC C304102 R/W CO C304102
VAULT PLAN NO.
SHEET 016 OF 320

VAULT SERIAL NO.	DATE	MARK	NATURE REVISIONS	MADE	CHK'D	REV'D

C:\pwworking\sea\d0883918\016 C304102-P-EROS-440004.dwg
dlarnes Nov-20-13 8:37am

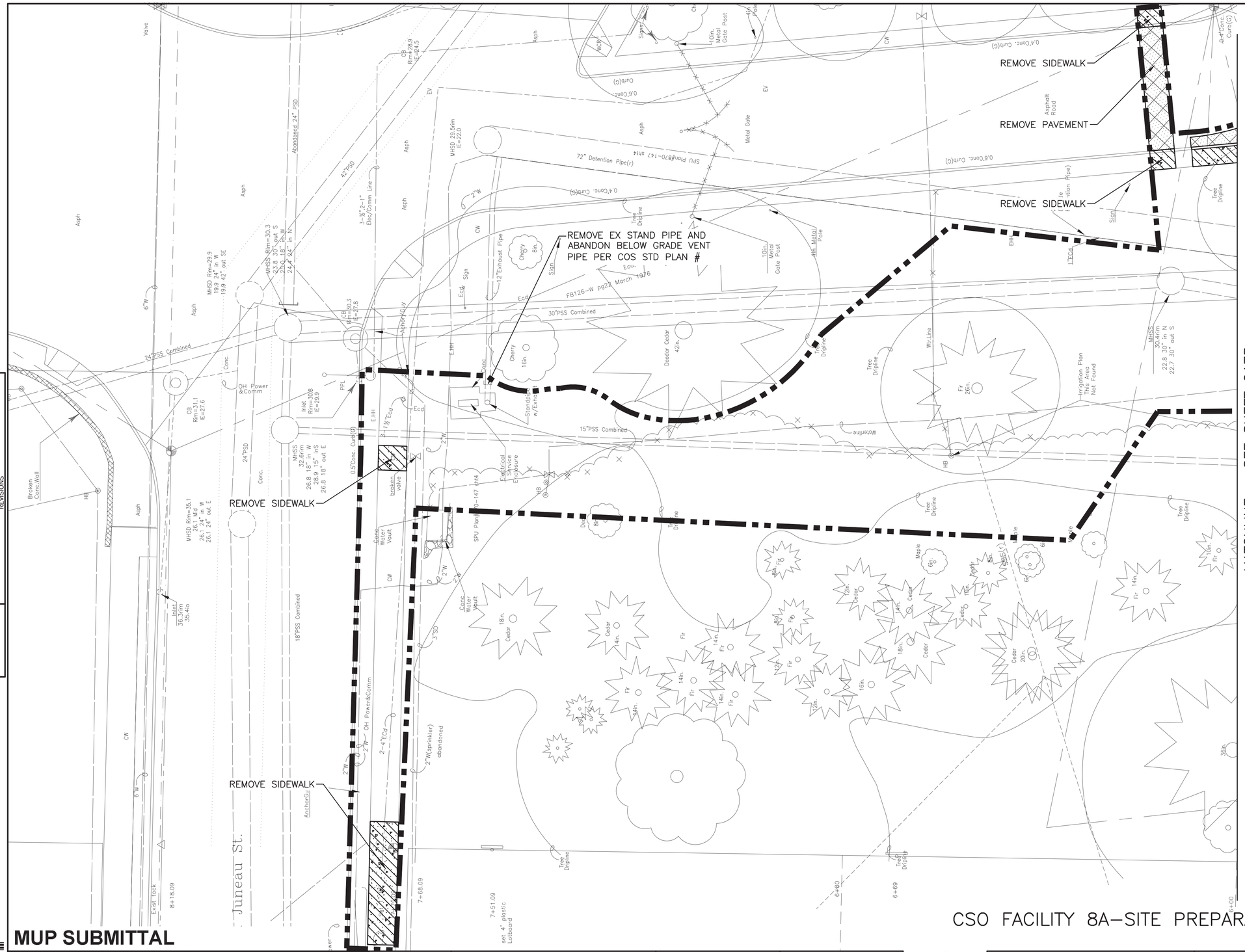

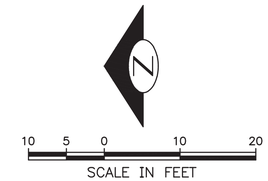

KEY MAP

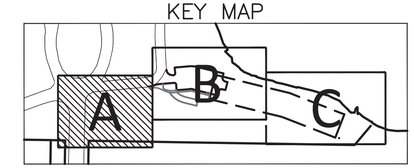

VAULT SERIAL NO.	DATE	MARK	NATURE REVISIONS	MADE	CHK'D	REV'D

MUP SUBMITTAL

CSO FACILITY 8A–SITE PREPARATION, DEMOLITION AND PAVEMENT REMOVAL–SHEET 1 OF 3

HDR Engineering, Inc.

LPD engineering pllc — 911 Western Ave, Suite 420, Seattle, WA 98104, p. 206.725.1211, f. 206.973.5344, www.lpdengineering.com

0 ½ 1 — IF THIS BAR DOES NOT MEASURE 1" THEN DRAWING IS NOT PLOTTED TO ORIGINAL SCALE.

APPROVED FOR ADVERTISING
NANCY LOCKE
DEPARTMENT OF FINANCE & ADMINISTRATIVE SERVICES
SEATTLE, WASHINGTON 20
BY: PURCHASING & CONTRACTING SERVICES DIRECTOR

NAME OR INITIALS AND DATE
DESIGNED JAS
CHECKED ----
DRAWN DMB
CHECKED

INITIALS AND DATE
REVIEWED:
DES. CONST.
SDOT PROJ. MGR.
RECEIVED
REVISED AS BUILT

ALL WORK SHALL BE DONE IN ACCORDANCE WITH THE CITY OF SEATTLE STANDARD PLANS AND SPECIFICATIONS AND OTHER DOCUMENTS CALLED FOR IN SECTION 0-02.3 OF THE PROJECT MANUAL.

LAURIE J. PEARR — STATE OF WASHINGTON — 32786 — REGISTERED PROFESSIONAL ENGINEER

Seattle Public Utilities
City of Seattle
Ray Hoffman, Director
ORDINANCE NO.
FUND:
SCALE: 1"=10'
APPROVED
INSPECTOR'S BOOK

HENDERSON NORTH CSO REDUCTION

JOB NO. PC C304102 R/W CO C304102
VAULT PLAN NO.
SHEET 017A OF 320

C:\pwworking\sea\d0863918\017A C304102-P-DEMO-440005A.dwg
dlomsb Nov-20-13 8:39am

NOTES:
1. FOR UTILITY DEMOLITION SEE SHEET 016A & 017.

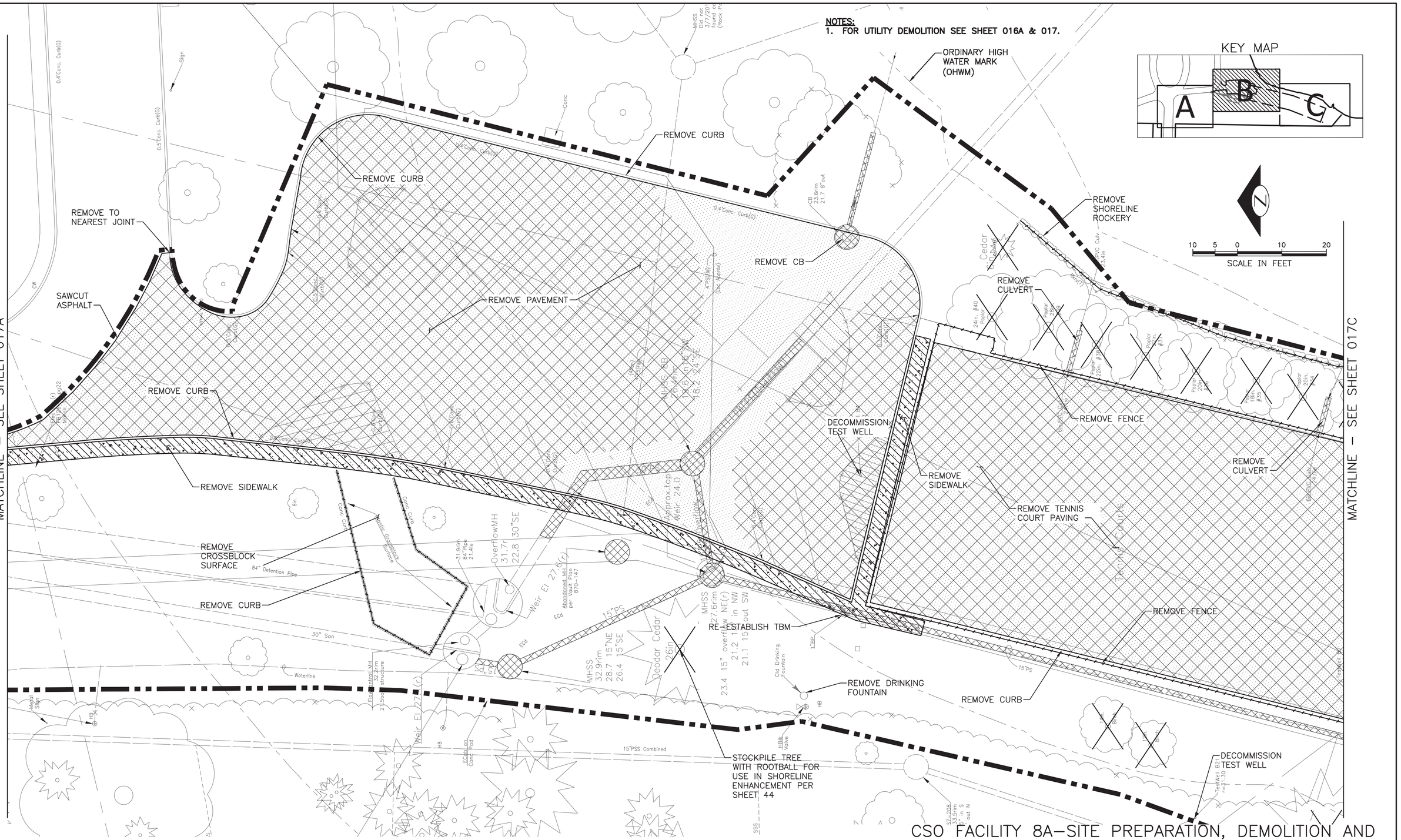

MUP SUBMITTAL

CSO FACILITY 8A–SITE PREPARATION, DEMOLITION AND PAVEMENT REMOVAL–SHEET 2 OF 3

VAULT SERIAL NO.	DATE	MARK	NATURE REVISIONS	MADE	CHK'D	REV'D

HDR Engineering, Inc.

LPD engineering pllc — 911 Western Ave, Suite 420, Seattle, WA 98104, p. 206.725.1211, f. 206.973.5344, www.lpdengineering.com

0 ½ 1 — IF THIS BAR DOES NOT MEASURE 1" THEN DRAWING IS NOT PLOTTED TO ORIGINAL SCALE.

APPROVED FOR ADVERTISING
NANCY LOCKE
DEPARTMENT OF FINANCE & ADMINISTRATIVE SERVICES
SEATTLE, WASHINGTON 20
BY: PURCHASING & CONTRACTING SERVICES DIRECTOR

NAME OR INITIALS AND DATE	INITIALS AND DATE
DESIGNED	REVIEWED: DES. CONST. SDOT PROJ. MGR.
CHECKED	
DRAWN	RECEIVED
CHECKED	REVISED AS BUILT

ALL WORK SHALL BE DONE IN ACCORDANCE WITH THE CITY OF SEATTLE STANDARD PLANS AND SPECIFICATIONS AND OTHER DOCUMENTS CALLED FOR IN SECTION 0-02.3 OF THE PROJECT MANUAL.

LAURIE J. PEARL — STATE OF WASHINGTON — 32768 — REGISTERED PROFESSIONAL ENGINEER

Seattle Public Utilities — City of Seattle — Ray Hoffman, Director
ORDINANCE NO. APPROVED
FUND:
SCALE: 1"=10' INSPECTOR'S BOOK

HENDERSON NORTH CSO REDUCTION

JOB NO. PC C304102 R/W CO C304102
VAULT PLAN NO.
SHEET 017B OF 320

C:\pwworking\sea\d0863918\017B C304102-P-DEMO-440005B.dwg
dlomeb Nov-20-13 8:44am

NOTES:
1. FOR UTILITY DEMOLITION SEE SHEETS 016 AND 017.

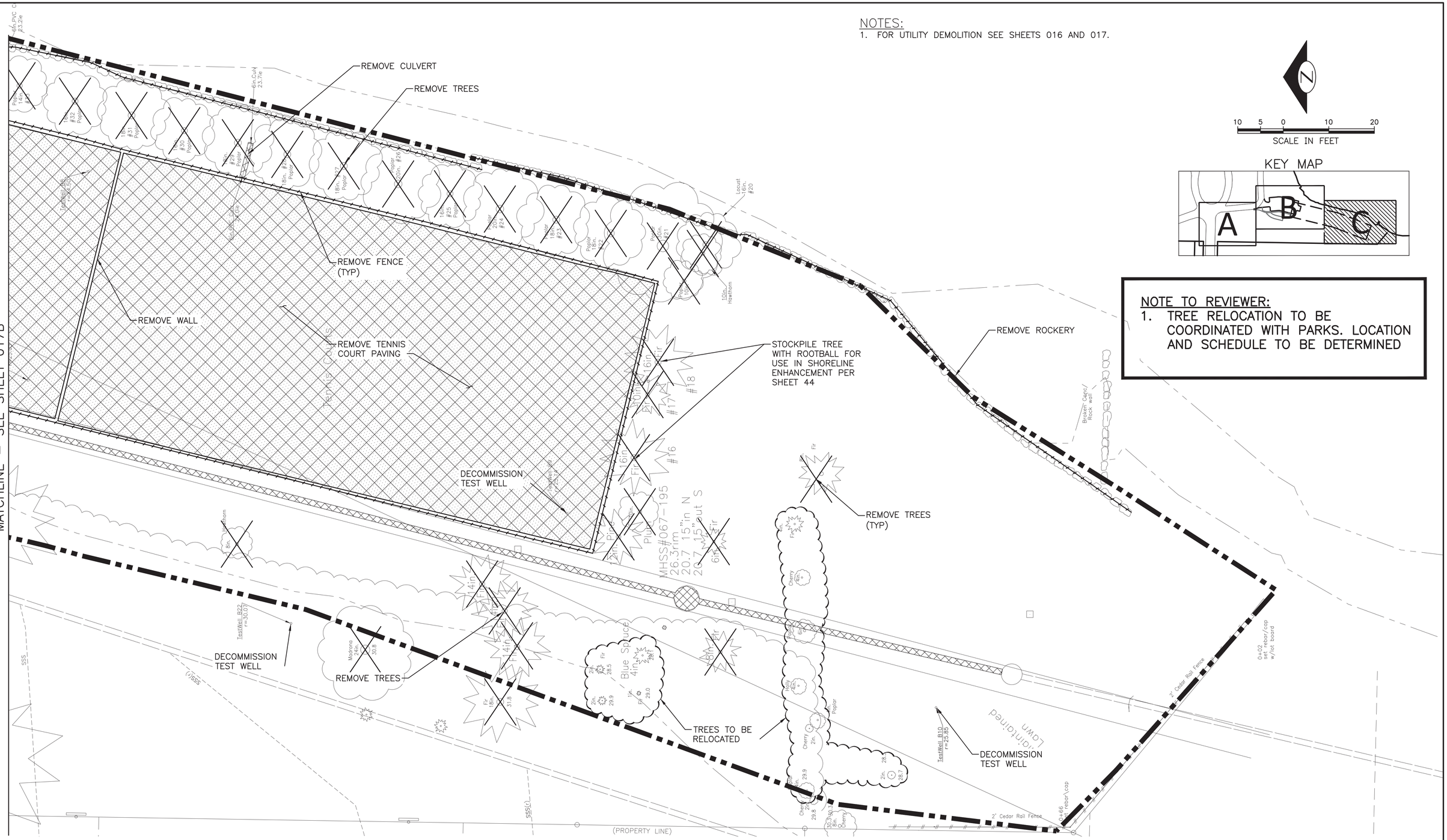

NOTE TO REVIEWER:
1. TREE RELOCATION TO BE COORDINATED WITH PARKS. LOCATION AND SCHEDULE TO BE DETERMINED

VAULT SERIAL NO.	DATE	MARK	NATURE REVISIONS	MADE	CHK'D	REV'D

C:\pwworking\sea\d0683918\017C C304102-P-DEMO-44C005C.dwg
jms Nov-26-13 11:34am

MUP SUBMITTAL

CSO FACILITY 8A–SITE PREPARATION, DEMOLITION AND PAVEMENT REMOVAL–SHEET 3 OF 3

HDR Engineering, Inc.

LPD engineering pllc
911 Western Ave
Suite 420
Seattle, WA 98104
p. 206.725.1211
f. 206.973.5344
www.lpdengineering.com

0 ½ 1
IF THIS BAR DOES NOT MEASURE 1" THEN DRAWING IS NOT PLOTTED TO ORIGINAL SCALE.

APPROVED FOR ADVERTISING
NANCY LOCKE
DEPARTMENT OF FINANCE & ADMINISTRATIVE SERVICES
SEATTLE, WASHINGTON 20
BY:
PURCHASING & CONTRACTING SERVICES DIRECTOR

NAME OR INITIALS AND DATE	INITIALS AND DATE
DESIGNED	REVIEWED: DES. CONST. SDOT PROJ. MGR.
CHECKED	
DRAWN	RECEIVED
CHECKED	REVISED AS BUILT

ALL WORK SHALL BE DONE IN ACCORDANCE WITH THE CITY OF SEATTLE STANDARD PLANS AND SPECIFICATIONS AND OTHER DOCUMENTS CALLED FOR IN SECTION 0-02.3 OF THE PROJECT MANUAL.

LAURIE J. PEARR
STATE OF WASHINGTON
30766
REGISTERED PROFESSIONAL ENGINEER

Seattle Public Utilities
City of Seattle
Ray Hoffman, Director
ORDINANCE NO.
FUND:
SCALE: 1"=10'
APPROVED
INSPECTOR'S BOOK

HENDERSON NORTH CSO REDUCTION

JOB NO. PC C304102 R/W CO C304102
VAULT PLAN NO.
SHEET 017C OF 320

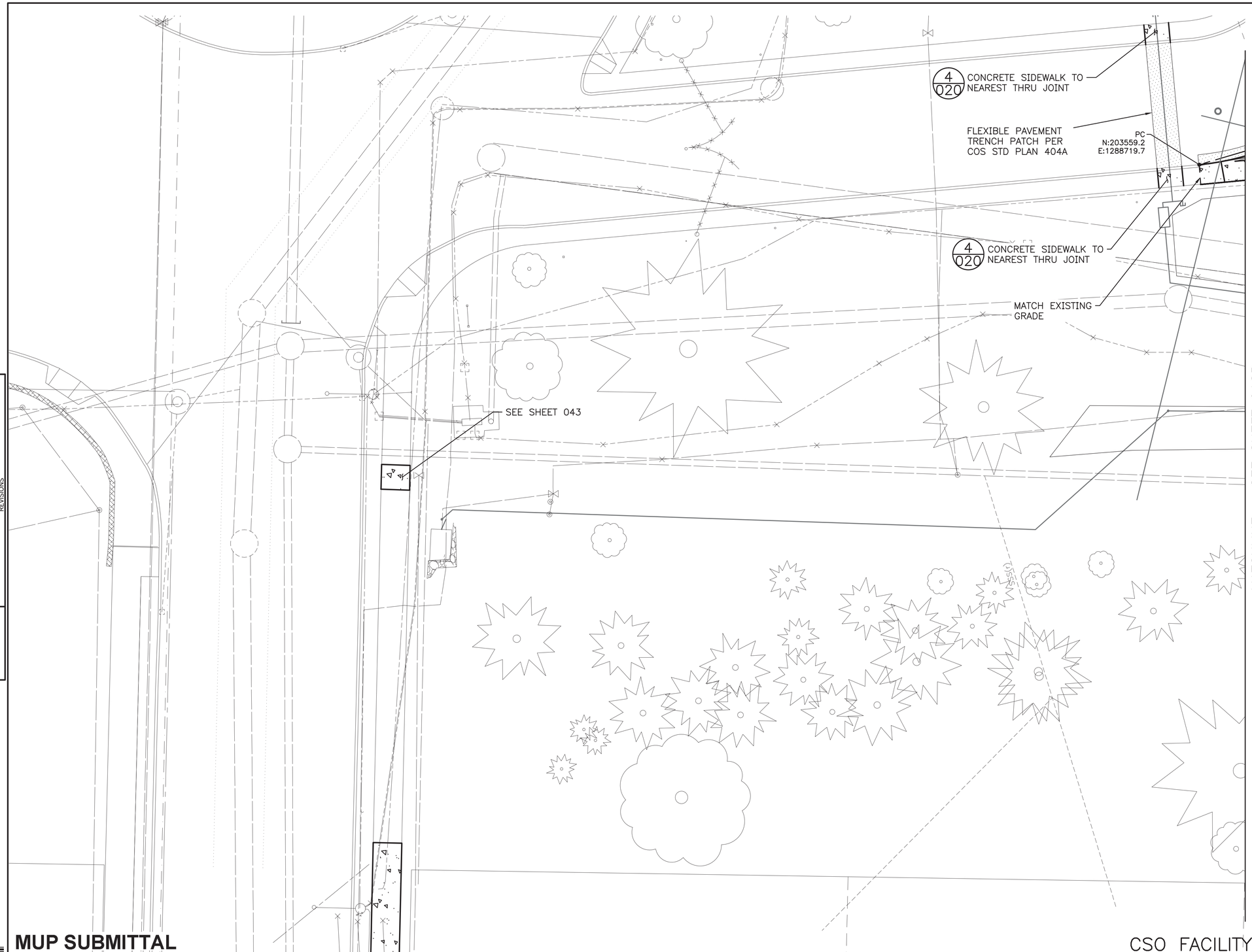

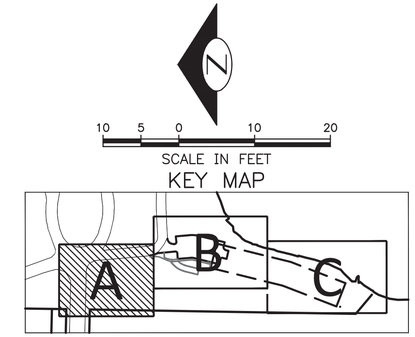

VAULT SERIAL NO.	DATE	MARK	NATURE REVISIONS	MADE	CHK'D	REV'D

C:\pwworking\sea\d0863918\018A C304102-P-Site-44C0056A.dwg
dianneb Nov-20-13 8:54am

MUP SUBMITTAL

CSO FACILITY 8A–PAVING PLAN–SHEET 1 OF 3

HDR Engineering, Inc.

LPD engineering pllc
911 Western Ave
Suite 420
Seattle, WA 98104
p. 206.725.1211
f. 206.973.5344
www.lpdengineering.com

0 ½ 1
IF THIS BAR DOES NOT MEASURE 1" THEN DRAWING IS NOT PLOTTED TO ORIGINAL SCALE.

APPROVED FOR ADVERTISING
NANCY LOCKE
DEPARTMENT OF FINANCE & ADMINISTRATIVE SERVICES
SEATTLE, WASHINGTON 20

BY:
PURCHASING & CONTRACTING SERVICES DIRECTOR

NAME OR INITIALS AND DATE
DESIGNED JAS
CHECKED NFH
DRAWN DMB
CHECKED NFH

INITIALS AND DATE
REVIEWED:
DES. CONST.
SDOT PROJ. MGR.
RECEIVED
REVISED AS BUILT

ALL WORK SHALL BE DONE IN ACCORDANCE WITH THE CITY OF SEATTLE STANDARD PLANS AND SPECIFICATIONS AND OTHER DOCUMENTS CALLED FOR IN SECTION 0-02.3 OF THE PROJECT MANUAL.

LAURIE J. PEARR
STATE OF WASHINGTON
30766
REGISTERED
PROFESSIONAL ENGINEER

Seattle Public Utilities
City of Seattle
Ray Hoffman, Director

ORDINANCE NO.
FUND:
SCALE: 1"=10'
APPROVED
INSPECTOR'S BOOK

HENDERSON NORTH CSO REDUCTION

JOB NO. PC C304102
R/W
CO C304102
VAULT PLAN NO.

SHEET 018A OF 320

NOTES:
1. SEE SHEET 20A FOR TENNIS COURT STRIPING & FURNISHING.
2. COORDINATE TENNIS COURT FENCE & HARDWARE OVER VAULT WITH STRUCTURAL PLANS.

PERMITING DATA:

WITHIN 100' ECA BUFFER:	
EXISTING IMPERVIOUS AREA	22,100 SF
PROPOSED IMPERVIOUS AREA	29,140 SF

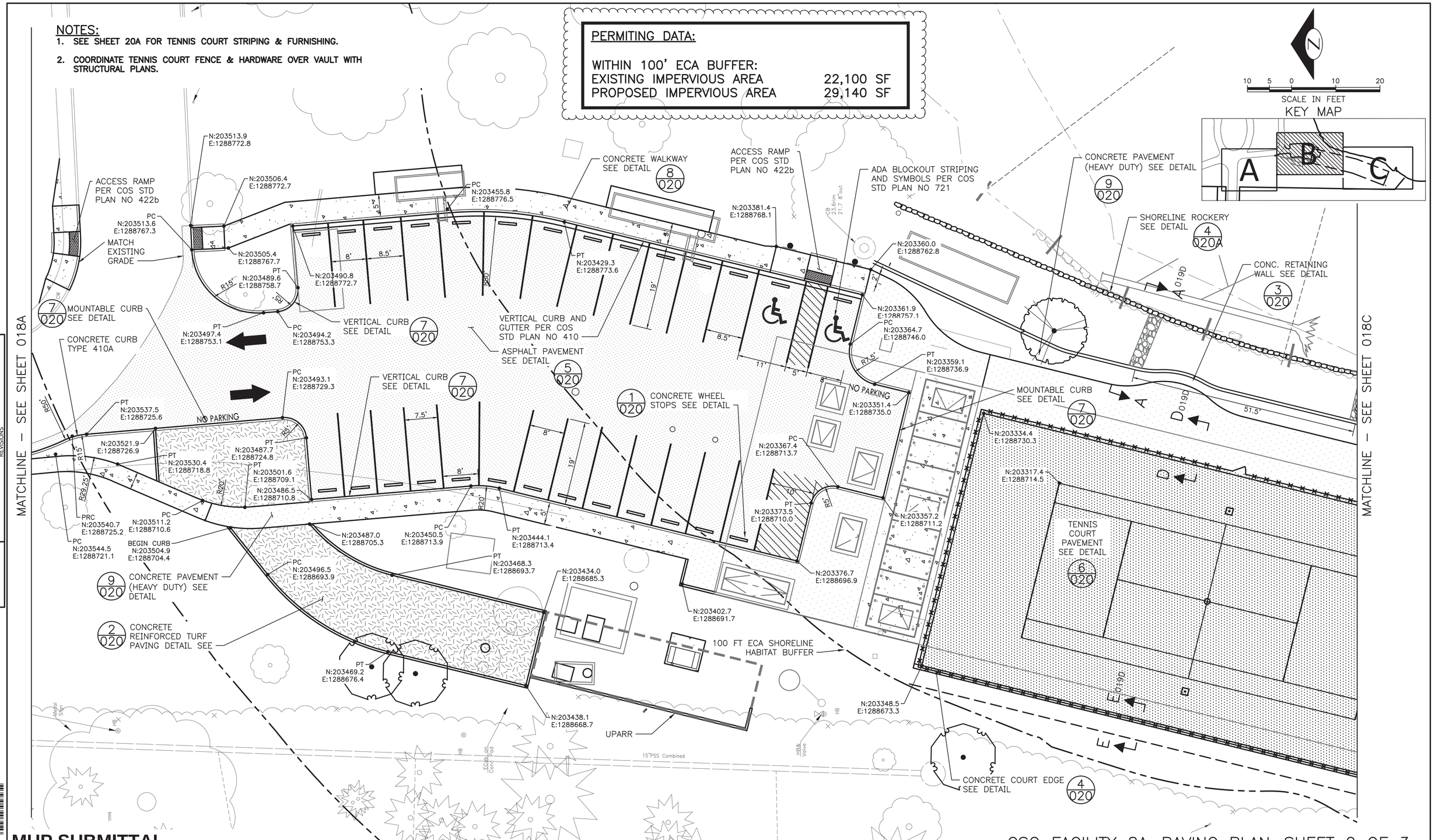

MUP SUBMITTAL

CSO FACILITY 8A–PAVING PLAN–SHEET 2 OF 3

HDR Engineering, Inc.

LPD engineering pllc 911 Western Ave Suite 420 Seattle, WA 98104 p. 206.725.1211 f. 206.973.5344 www.lpdengineering.com

0 ½ 1
IF THIS BAR DOES NOT MEASURE 1" THEN DRAWING IS NOT PLOTTED TO ORIGINAL SCALE.

APPROVED FOR ADVERTISING
NANCY LOCKE
DEPARTMENT OF FINANCE & ADMINISTRATIVE SERVICES
SEATTLE, WASHINGTON 20
BY: PURCHASING & CONTRACTING SERVICES DIRECTOR

NAME OR INITIALS AND DATE	INITIALS AND DATE
DESIGNED JAS	REVIEWED: DES. CONST. SDOT PROJ. MGR.
CHECKED NFH	
DRAWN DMB	RECEIVED
CHECKED NFH	REVISED AS BUILT

ALL WORK SHALL BE DONE IN ACCORDANCE WITH THE CITY OF SEATTLE STANDARD PLANS AND SPECIFICATIONS AND OTHER DOCUMENTS CALLED FOR IN SECTION 0-02.3 OF THE PROJECT MANUAL.

LAURIE J. PEARR STATE OF WASHINGTON 30786 REGISTERED PROFESSIONAL ENGINEER

Seattle Public Utilities
City of Seattle
Ray Hoffman, Director
ORDINANCE NO. APPROVED
FUND:
SCALE: 1"=10' INSPECTOR'S BOOK

HENDERSON NORTH CSO REDUCTION

JOB NO. PC C304102 R/W CO C304102
VAULT PLAN NO. 777–806
SHEET 018B OF 320

VAULT	SERIAL NO.	DATE	MARK	NATURE REVISIONS	MADE	CHK'D	REV'D

C:\pwworking\sea\d0839161\018B C304102-P-SITE-44C006B.dwg
jims Mar-04-14 12:38pm

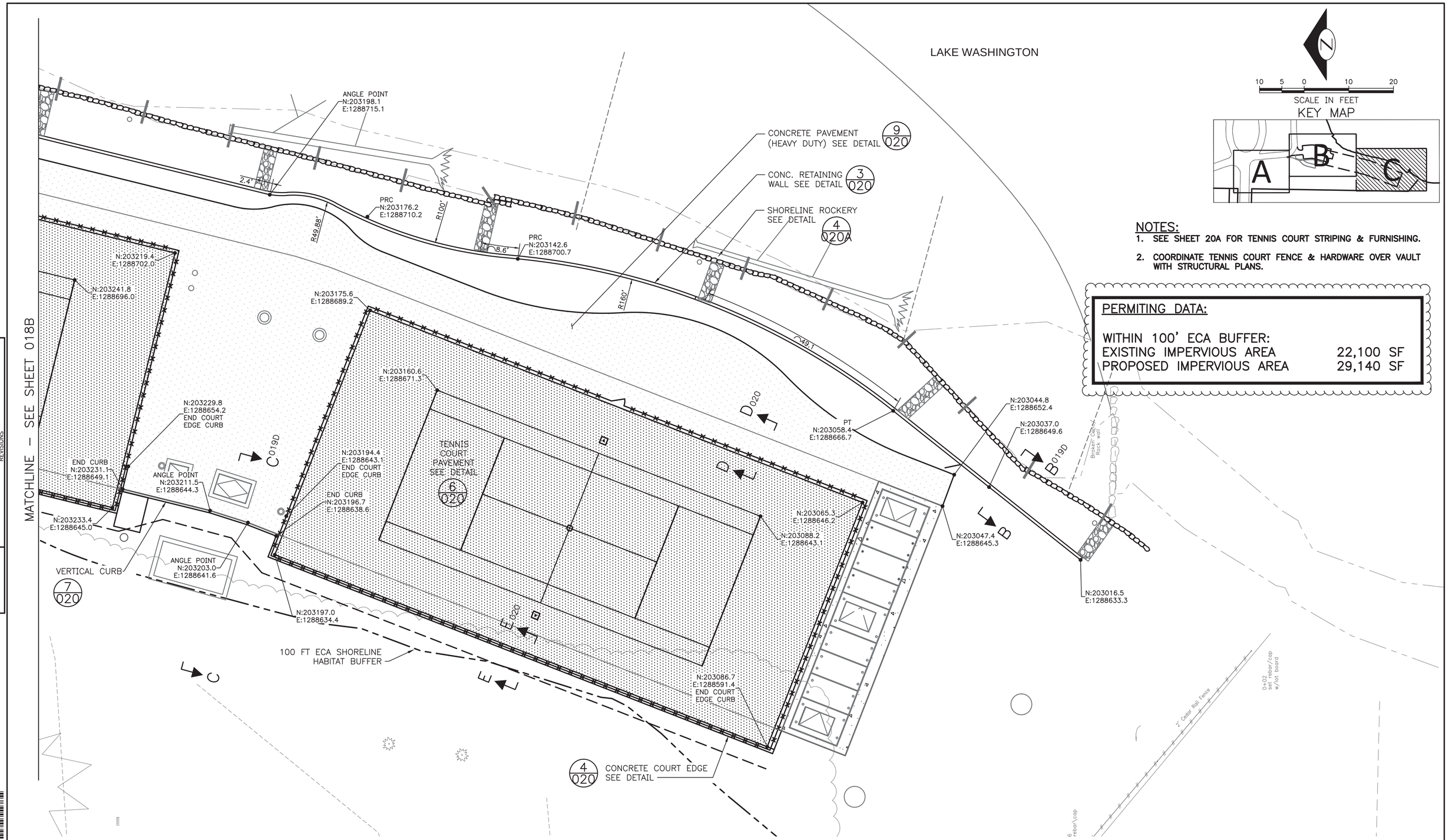

NOTES:

1. SEE SHEET 20A FOR TENNIS COURT STRIPING & FURNISHING.
2. COORDINATE TENNIS COURT FENCE & HARDWARE OVER VAULT WITH STRUCTURAL PLANS.

PERMITING DATA:

WITHIN 100' ECA BUFFER:	
EXISTING IMPERVIOUS AREA	22,100 SF
PROPOSED IMPERVIOUS AREA	29,140 SF

VAULT SERIAL NO.	DATE	MARK	NATURE REVISIONS	MADE	CHK'D	REV'D

C:\pwworking\sea\d0983918\018C C304102-P-SITE-44C006C.dwg
jims Mar-04-14 12:37pm

MUP SUBMITTAL

CSO FACILITY 8A–PAVING PLAN–SHEET 3 OF 3

HDR Engineering, Inc.

LPD engineering pllc
911 Western Ave
Suite 420
Seattle, WA 98104
p. 206.725.1211
f. 206.973.5344
www.lpdengineering.com

0 ? 1
IF THIS BAR DOES NOT MEASURE 1" THEN DRAWING IS NOT PLOTTED TO ORIGINAL SCALE.

APPROVED FOR ADVERTISING
NANCY LOCKE
DEPARTMENT OF FINANCE & ADMINISTRATIVE SERVICES
SEATTLE, WASHINGTON 20
BY:
PURCHASING & CONTRACTING SERVICES DIRECTOR

NAME OR INITIALS AND DATE	INITIALS AND DATE
DESIGNED JAS	REVIEWED: DES. CONST. SDOT PROJ. MGR.
CHECKED NFH	
DRAWN DMB	RECEIVED
CHECKED NFH	REVISED AS BUILT

ALL WORK SHALL BE DONE IN ACCORDANCE WITH THE CITY OF SEATTLE STANDARD PLANS AND SPECIFICATIONS AND OTHER DOCUMENTS CALLED FOR IN SECTION 0-02.3 OF THE PROJECT MANUAL.

LAURIE J. PEARR
STATE OF WASHINGTON
30786
REGISTERED
PROFESSIONAL ENGINEER

Seattle Public Utilities
City of Seattle
Ray Hoffman, Director
ORDINANCE NO.
FUND:
SCALE: 1"=10'
APPROVED
INSPECTOR'S BOOK

HENDERSON NORTH
CSO REDUCTION

JOB NO. PC C304102 R/W CO C304102
VAULT PLAN NO. 777–806
SHEET 018C OF 320

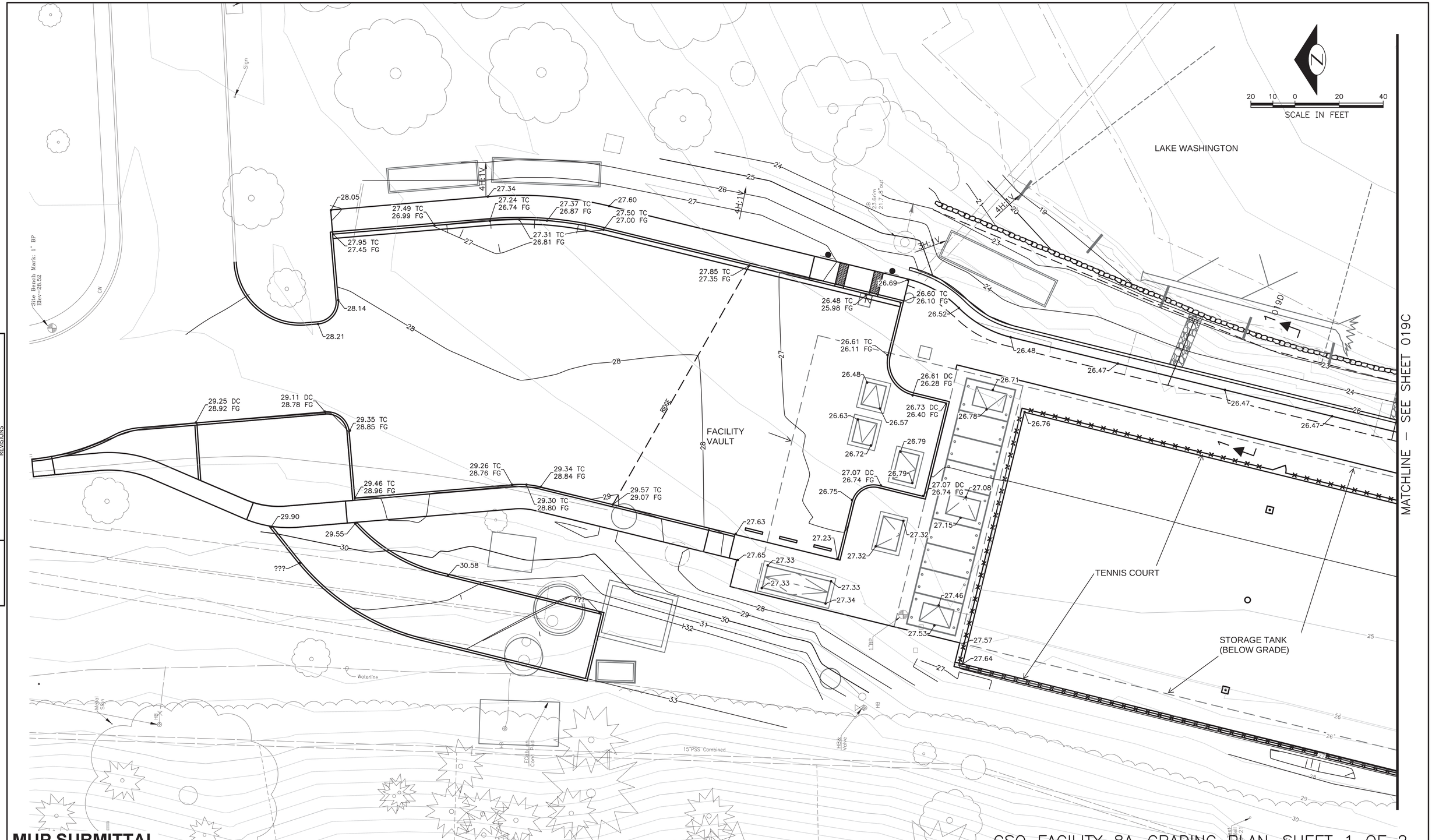

VAULT SERIAL NO.	DATE	MARK	NATURE REVISIONS	MADE	CHK'D	REV'D

C:\pwworking\wes\d0883918\019B C304102-P-SITE-44C007B.dwg
jims Dec-04-13 2:28pm

MUP SUBMITTAL

CSO FACILITY 8A–GRADING PLAN–SHEET 1 OF 2

HDR Engineering, Inc.

LPD engineering pllc
911 Western Ave
Suite 420
Seattle, WA 98104
p. 206.725.1211
f. 206.973.5344
www.lpdengineering.com

0 ½ 1
IF THIS BAR DOES NOT MEASURE 1" THEN DRAWING IS NOT PLOTTED TO ORIGINAL SCALE.

APPROVED FOR ADVERTISING
NANCY LOCKE
DEPARTMENT OF FINANCE & ADMINISTRATIVE SERVICES
SEATTLE, WASHINGTON 20
BY:
PURCHASING & CONTRACTING SERVICES DIRECTOR

NAME OR INITIALS AND DATE
DESIGNED
CHECKED
DRAWN
CHECKED

INITIALS AND DATE
REVIEWED:
DES. CONST.
SDOT PROJ. MGR.
RECEIVED
REVISED AS BUILT

ALL WORK SHALL BE DONE IN ACCORDANCE WITH THE CITY OF SEATTLE STANDARD PLANS AND SPECIFICATIONS AND OTHER DOCUMENTS CALLED FOR IN SECTION 0-02.3 OF THE PROJECT MANUAL.

LAURIE J. PEAKE
STATE OF WASHINGTON
30786
REGISTERED PROFESSIONAL ENGINEER

Seattle Public Utilities
City of Seattle
Ray Hoffman, Director
ORDINANCE NO.
FUND:
SCALE: AS NOTED
APPROVED
INSPECTOR'S BOOK

HENDERSON NORTH CSO REDUCTION

JOB NO. PC C304102
R/W
CO C304102
VAULT PLAN NO.
SHEET 019B OF 320

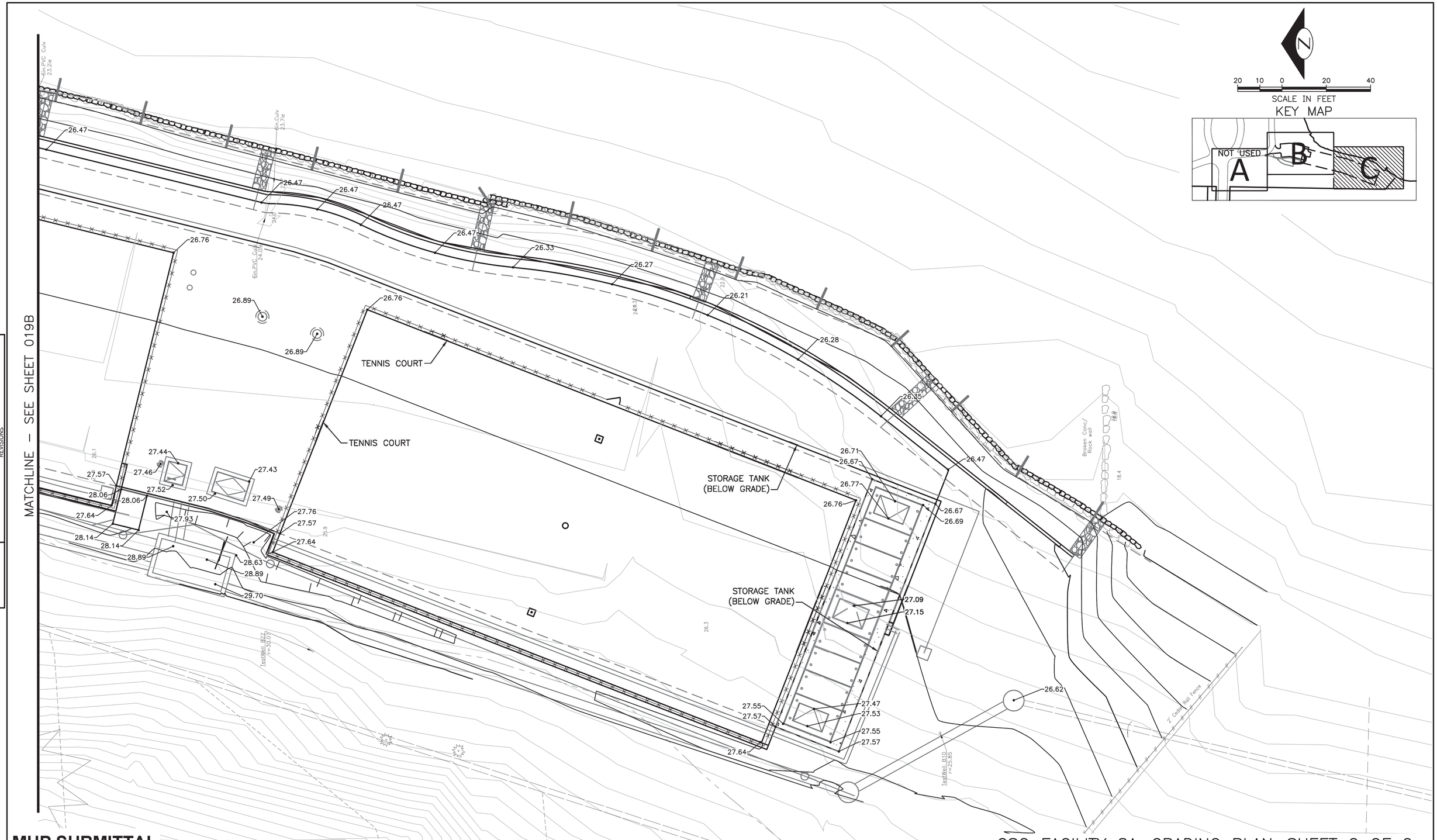

VAULT SERIAL NO.	DATE	MARK	NATURE REVISIONS	MADE	CHK'D	REV'D

C:\pwworking\sea\d0983916\019C C304102-P-SITE-44C007C.dwg
dianneb Nov-20-13 9:12am

MUP SUBMITTAL

CSO FACILITY 8A–GRADING PLAN–SHEET 2 OF 2

HDR Engineering, Inc.

LPD engineering pllc
911 Western Ave
Suite 420
Seattle, WA 98104
p. 206.725.1211
f. 206.973.5344
www.lpdengineering.com

0 ½ 1
IF THIS BAR DOES NOT MEASURE 1" THEN DRAWING IS NOT PLOTTED TO ORIGINAL SCALE.

APPROVED FOR ADVERTISING
NANCY LOCKE
DEPARTMENT OF FINANCE & ADMINISTRATIVE SERVICES
SEATTLE, WASHINGTON 20
BY:
PURCHASING & CONTRACTING SERVICES DIRECTOR

NAME OR INITIALS AND DATE
DESIGNED JAS
CHECKED NFH
DRAWN DMB
CHECKED NFH

INITIALS AND DATE
REVIEWED:
DES. CONST.
SDOT PROJ. MGR.
RECEIVED
REVISED AS BUILT

ALL WORK SHALL BE DONE IN ACCORDANCE WITH THE CITY OF SEATTLE STANDARD PLANS AND SPECIFICATIONS AND OTHER DOCUMENTS CALLED FOR IN SECTION 0-02.3 OF THE PROJECT MANUAL.

LAURIE J. PEARR
STATE OF WASHINGTON
30786
REGISTERED PROFESSIONAL ENGINEER

Seattle Public Utilities
City of Seattle
Ray Hoffman, Director
ORDINANCE NO.
FUND:
SCALE: 1"=10'
APPROVED
INSPECTOR'S BOOK

HENDERSON NORTH CSO REDUCTION

JOB NO. PC C304102
R/W
CO C304102
VAULT PLAN NO.
SHEET 019C OF 320

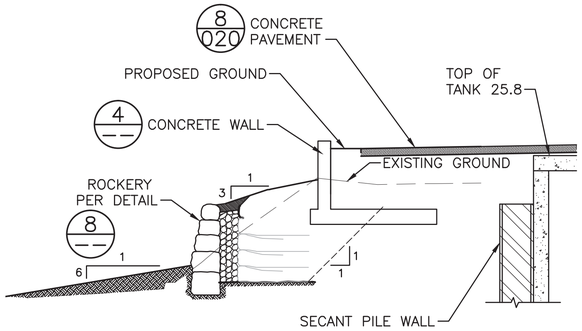

SHORELINE SECTION 1 (1 / 019B,019C)
SCALE: 1"=5'

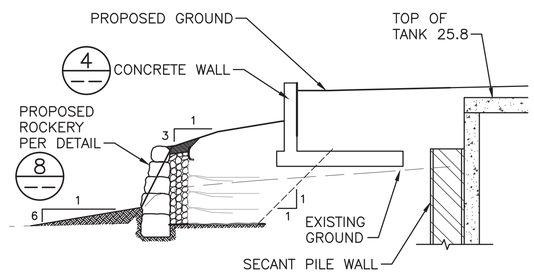

SHORELINE SECTION 2 (2 / 019C)
SCALE: 1"=5'

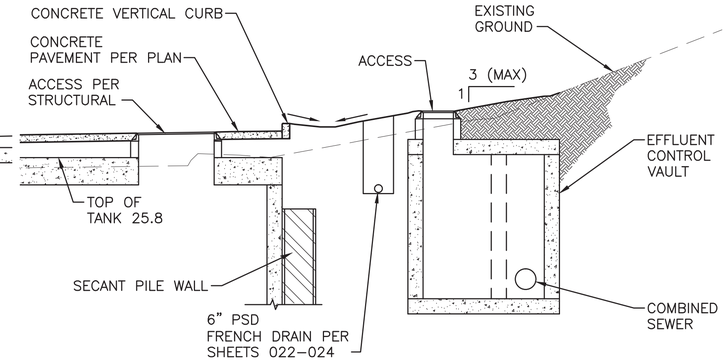

WEST VAULT SECTION (3 / 019C)
SCALE: 1"=5'

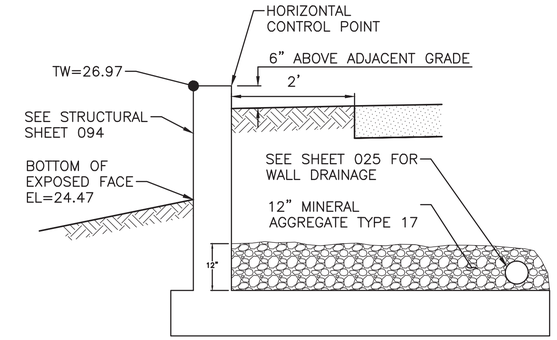

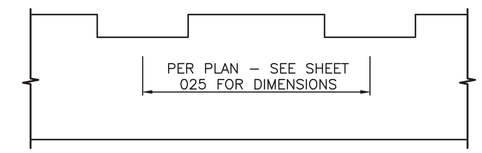

CONCRETE WALL (4 / ––)
NTS

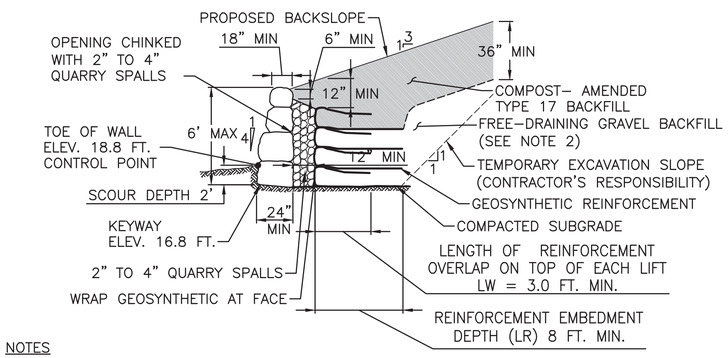

NOTES

1. ROCKERY FACINGS ARE TO BE CONSTRUCTED TO CITY OF SEATTLE STANDARDS. SEE CITY OF SEATTLE STANDARDS SEC. 2–13.3 AND DWG. NO. 141. THE BOTTOM TWO ROCK COURSES SHALL BE 5–MAN ROCK IN ACCORDANCE WITH 9–03.17 OF THE CITY OF SEATTLE STANDARD SPECIFICATIONS. HIGHER COURSES SHALL BE 4–MAN ROCK, MINIMUM.
2. BACKFILL FOR MECHANICALLY–STABILIZED EARTH WALL SHALL BE FREE DRAINING AND MEET THE REQUIREMENTS OF 9–13.7(2) OF TYPE 17 MINERAL AGGREGATE AS SPECIFIED IN 9–03.16 OF THE CITY OF SEATTLE STANDARD SPECIFICATIONS.
3. THE WALL FOUNDATION IS TO BE CLEARED OF ORGANIC MATTER AND DEBRIS AND THE UNDERLYING MINERAL SOIL COMPACTED TO 95 PERCENT OF THE MAXIMUM DRY DENSITY.
4. THE FIRST LAYER OF REINFORCEMENT SHOULD BE AT THE COMPACTED SUBGRADE ELEVATION.
5. QUARRY SPALLS (2" TO 4") SHALL MEET THE REQUIREMENTS OF SECTION 19.3–7 OF THE CITY OF SEATTLE STANDARD SPECIFICATIONS.
6. GEOSYNTHETIC REINFORCEMENT TYPE, VERTICAL SPACING (Z), LONG–TERM DESIGN STRENGTH, AND EMBEDMENT LENGTH (LR) TO BE DETERMINED BY A PROFESSIONAL ENGINEER. REINFORCEMENT IS TO BE A CONTINUOUS SHEET FROM ITS POINT OF MAXIMUM EMBEDMENT, AROUND THE WRAPPED FACE, TO THE END OF THE OVERLAP ON TOP OF EACH LIFT.
7. GEOTEXTILE MAY BE REQUIRED BETWEEN GEOGRID REINFORCEMENT AND FILL MATERIAL AT THE WRAPPED FACE TO PREVENT FILL MATERIAL FROM RAVELING THROUGH GEOGRID OPENINGS.

REINFORCED ROCKERY (8 / ––)
NTS

CSO FACILITY 8A–SITE SECTIONS & DETAILS

VAULT SERIAL NO.	DATE	MARK	NATURE REVISIONS	MADE	CHK'D	REV'D

C:\pwworking\sea\d0839318\019D C304102–P–DETL–44C007D.dwg
dianneb Nov–19–13 2:02pm

MUP SUBMITTAL

HDR Engineering, Inc.

LPD engineering pllc
911 Western Ave
Suite 420
Seattle, WA 98104
p. 206.725.1211
f. 206.973.5344
www.lpdengineering.com

0 ½ 1
IF THIS BAR DOES NOT MEASURE 1" THEN DRAWING IS NOT PLOTTED TO ORIGINAL SCALE.

APPROVED FOR ADVERTISING
NANCY LOCKE
DEPARTMENT OF FINANCE & ADMINISTRATIVE SERVICES
SEATTLE, WASHINGTON 20
BY:
PURCHASING & CONTRACTING SERVICES DIRECTOR

NAME OR INITIALS AND DATE
DESIGNED JAS
CHECKED
DRAWN DMB
CHECKED

INITIALS AND DATE
REVIEWED:
DES. CONST.
SDOT PROJ. MGR.
RECEIVED
REVISED AS BUILT

ALL WORK SHALL BE DONE IN ACCORDANCE WITH THE CITY OF SEATTLE STANDARD PLANS AND SPECIFICATIONS AND OTHER DOCUMENTS CALLED FOR IN SECTION 0–02.3 OF THE PROJECT MANUAL.

LAURIE J. PEARR
STATE OF WASHINGTON
30766
REGISTERED PROFESSIONAL ENGINEER

Seattle Public Utilities
City of Seattle
Ray Hoffman, Director
ORDINANCE NO.
FUND:
SCALE: AS NOTED
APPROVED
INSPECTOR'S BOOK

HENDERSON NORTH CSO REDUCTION

JOB NO. PC C304102 R/W CO C304102
VAULT PLAN NO.
SHEET 019D OF 320

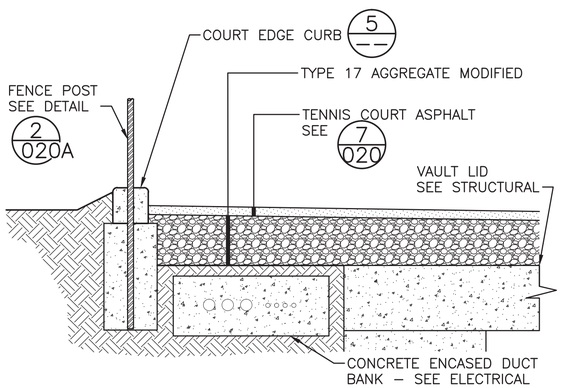

WEST EDGE – TENNIS COURT 1 018B
NTS

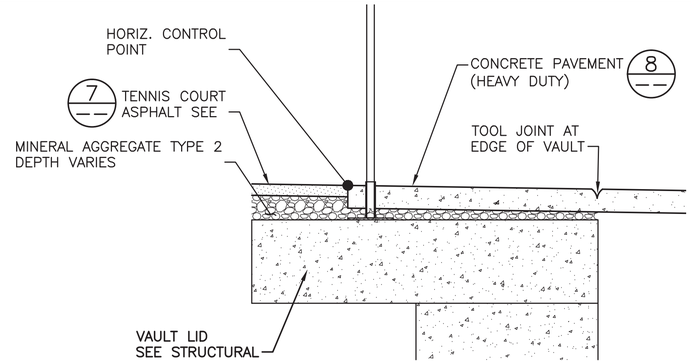

EAST EDGE – TENNIS COURT 2 018B
NTS

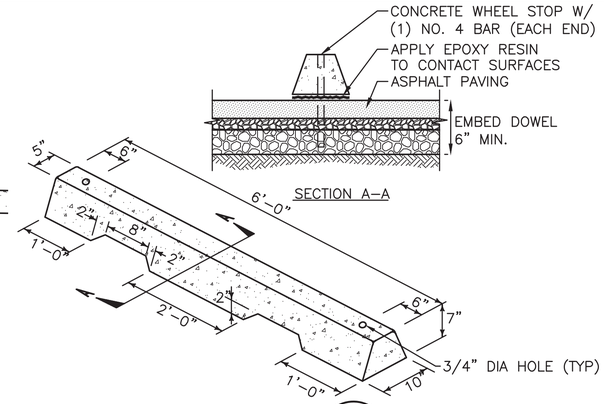

WHEELSTOP 3 018B
NTS

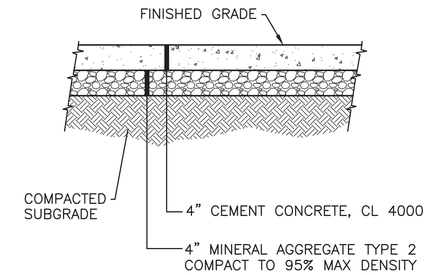

CONCRETE WALKWAY 4 018A,018B
NTS

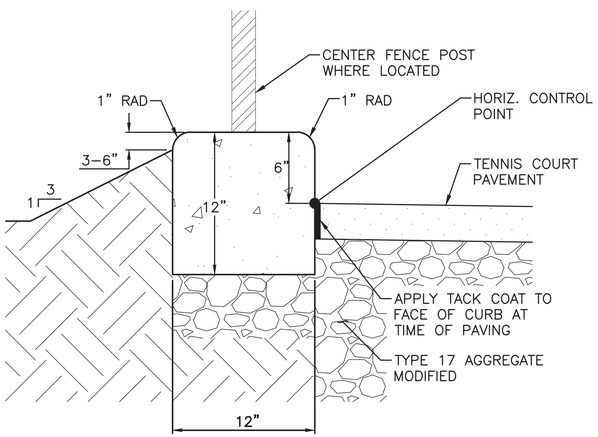

COURT EDGE CURB 5 018B,018C,020
NTS

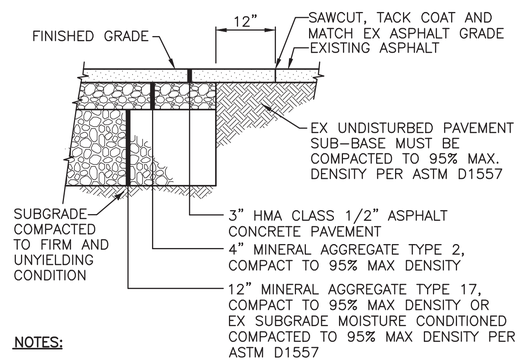

NOTES:

1. SAWCUT FULL DEPTH WHERE NEW PAVEMENT ABUTS EXISTING AND APPLY TACK COAT.

ASPHALT PARKING LOT PAVEMENT 6 018B
NTS

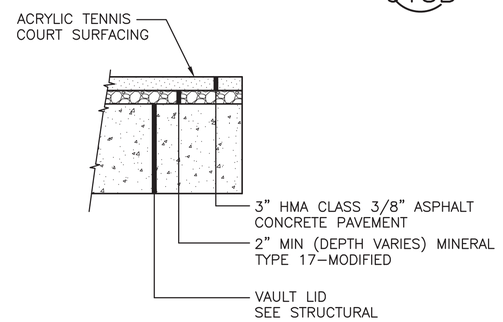

NOTES:

1. SAWCUT FULL DEPTH WHERE NEW PAVEMENT ABUTS EXISTING AND APPLY TACK COAT.

ASPHALT TENNIS COURT PAVEMENT 7 018B,018C
NTS

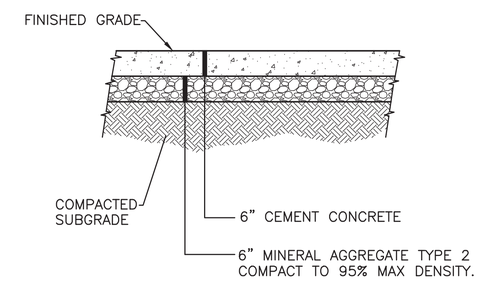

CONCRETE PAVEMENT (HEAVY DUTY) 8 018A,020
NTS

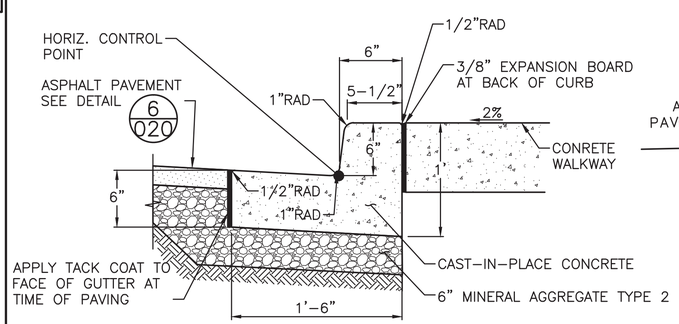

VERTICAL CURB AND GUTTER 9 018B
NTS

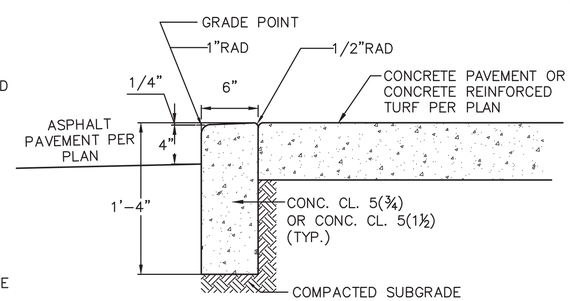

DEPRESSED CURB 10 018B
NTS

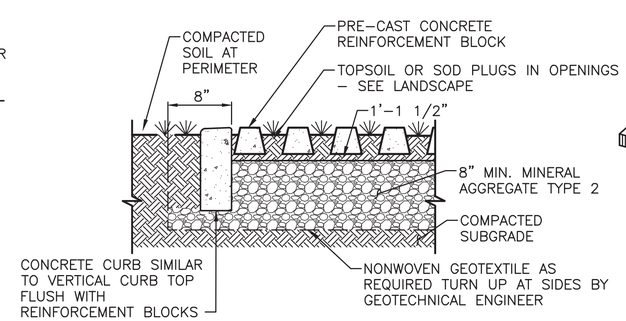

CONCRETE REINFORCED TURF PAVING 11 018B
NTS

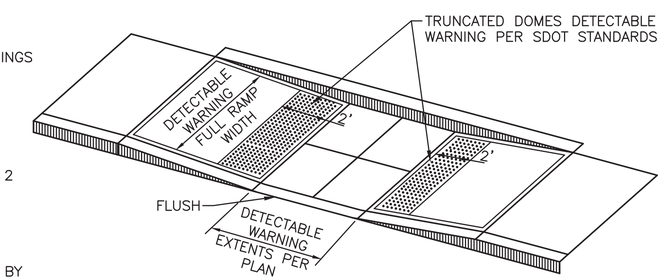

ACCESS RAMP 12 018B
NTS

MUP SUBMITTAL

CSO FACILITY 8A–SITE DETAILS–SHEET 1 OF 2

VAULT SERIAL NO.	DATE	MARK	NATURE REVISIONS	MADE	CHK'D	REV'D

C:\pwworking\sea\d0883918\020 C304102-P-DETL-440008.dwg
jims Nov-20-13 12:00pm

HDR Engineering, Inc.

LPD engineering pllc — 911 Western Ave, Suite 420, Seattle, WA 98104, p. 206.725.1211, f. 206.973.5344, www.lpdengineering.com

0 ½ 1 — IF THIS BAR DOES NOT MEASURE 1" THEN DRAWING IS NOT PLOTTED TO ORIGINAL SCALE.

APPROVED FOR ADVERTISING
NANCY LOCKE
DEPARTMENT OF FINANCE & ADMINISTRATIVE SERVICES
SEATTLE, WASHINGTON 20
BY: PURCHASING & CONTRACTING SERVICES DIRECTOR

NAME OR INITIALS AND DATE
DESIGNED JAS
CHECKED
DRAWN DMB
CHECKED

INITIALS AND DATE
REVIEWED:
DES. CONST.
SDOT PROJ. MGR.
RECEIVED
REVISED AS BUILT

ALL WORK SHALL BE DONE IN ACCORDANCE WITH THE CITY OF SEATTLE STANDARD PLANS AND SPECIFICATIONS AND OTHER DOCUMENTS CALLED FOR IN SECTION 0–02.3 OF THE PROJECT MANUAL.

LAURIE J. PEAKE — STATE OF WASHINGTON — 30786 — REGISTERED PROFESSIONAL ENGINEER

Seattle Public Utilities
City of Seattle
Ray Hoffman, Director
ORDINANCE NO. APPROVED
FUND:
SCALE: AS NOTED INSPECTOR'S BOOK

HENDERSON NORTH CSO REDUCTION

JOB NO. PC C304102 R/W CO C304102
VAULT PLAN NO.
SHEET 020 OF 320

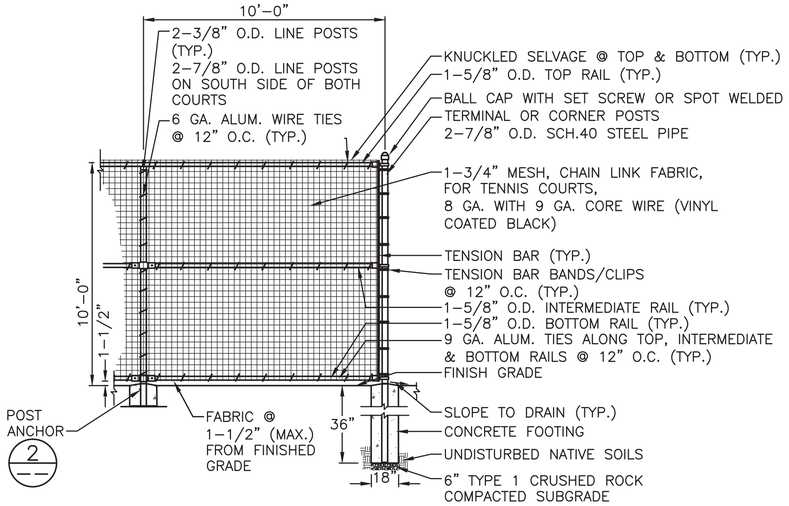

FENCE IN SOIL (1) 018B,018C
NTS

ANCHOR DIAMETERS	
TENNIS COURT HARDWARE	
CENTER STRAP ANCHOR	1.9"OD
NET POST	3.0"ID
FENCE POST	
TERMINAL OR CORNER LINE	2–7/8"ID 2–3/8"ID

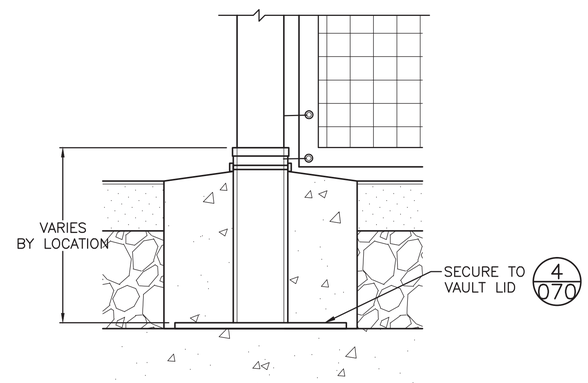

POST ANCHOR (2) 018B,018C
NTS

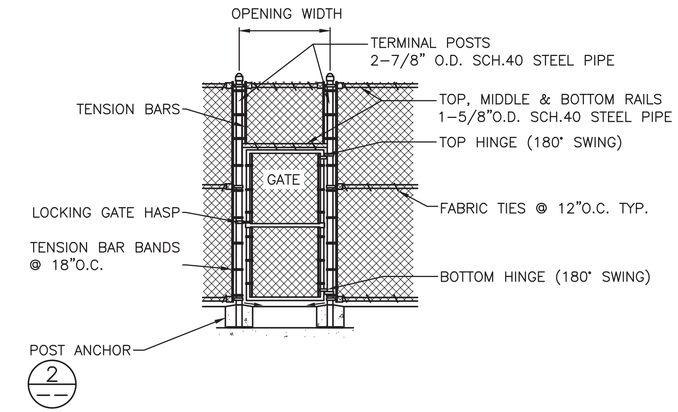

TENNIS COURT GATE (3) 018B,018C
NTS

NOTE:
1. ALL STRIPING DIMENSIONS ARE TO THE OUTSIDE EDGE OF LINES.
2. ALL PLAYING LINES ARE 2" IN WIDTH EXCEPT THE BASE LINES ARE 3" IN WIDTH.

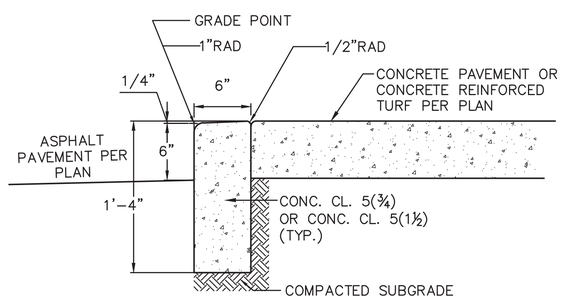

VERTICAL CURB (4) 018B,018C
NTS

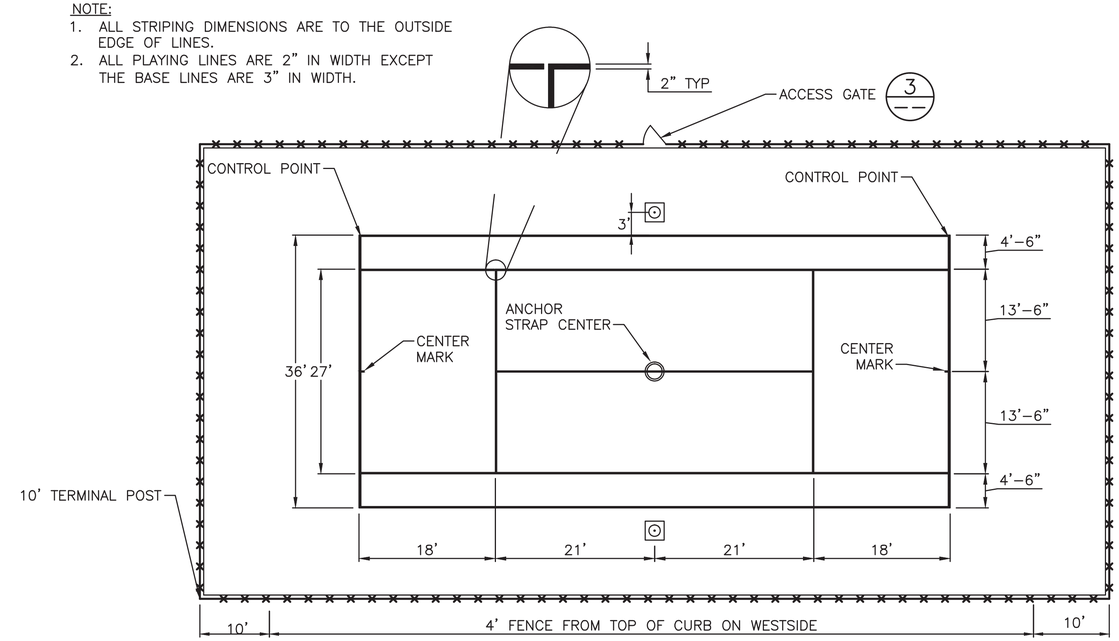

TENNIS COURT STRIPING PLAN (6) 018B,018C
NTS

NATURE REVISIONS	MADE	CHK'D	REV'D

VAULT SERIAL NO.	DATE	MARK

C:\pwworking\sea\d0883918\020A C304102-P-DETL-44C008a.dwg
dianneb Nov-20-13 9:31am

MUP SUBMITTAL

CSO FACILITY 8A–SITE DETAILS–SHEET 2 OF 2

HDR Engineering, Inc.

LPD engineering pllc
911 Western Ave
Suite 420
Seattle, WA 98104
p. 206.725.1211
f. 206.973.5344
www.lpdengineering.com

0 ½ 1
IF THIS BAR DOES NOT MEASURE 1" THEN DRAWING IS NOT PLOTTED TO ORIGINAL SCALE.

APPROVED FOR ADVERTISING
NANCY LOCKE
DEPARTMENT OF FINANCE & ADMINISTRATIVE SERVICES
SEATTLE, WASHINGTON 20
BY:
PURCHASING & CONTRACTING SERVICES DIRECTOR

NAME OR INITIALS AND DATE	INITIALS AND DATE
DESIGNED JAS	REVIEWED: DES. CONST. SDOT PROJ. MGR.
CHECKED	
DRAWN DMB	RECEIVED
CHECKED	REVISED AS BUILT

ALL WORK SHALL BE DONE IN ACCORDANCE WITH THE CITY OF SEATTLE STANDARD PLANS AND SPECIFICATIONS AND OTHER DOCUMENTS CALLED FOR IN SECTION 0–02.3 OF THE PROJECT MANUAL.

LAURIE J. PEARR
STATE OF WASHINGTON
30766
REGISTERED PROFESSIONAL ENGINEER

Seattle Public Utilities
City of Seattle
Ray Hoffman, Director
ORDINANCE NO.
FUND:
SCALE: AS NOTED
APPROVED
INSPECTOR'S BOOK

HENDERSON NORTH CSO REDUCTION

JOB NO. PC C304102 R/W CO C304102
VAULT PLAN NO.
SHEET 020A OF 320

NOTES TO REVIEWER:

1. BIORETENTION PLANTER REQUIREMENTS AND LOCATIONS ARE BEING COORDINATED WITH THE DEPARTMENT OF PARKS AND REC.

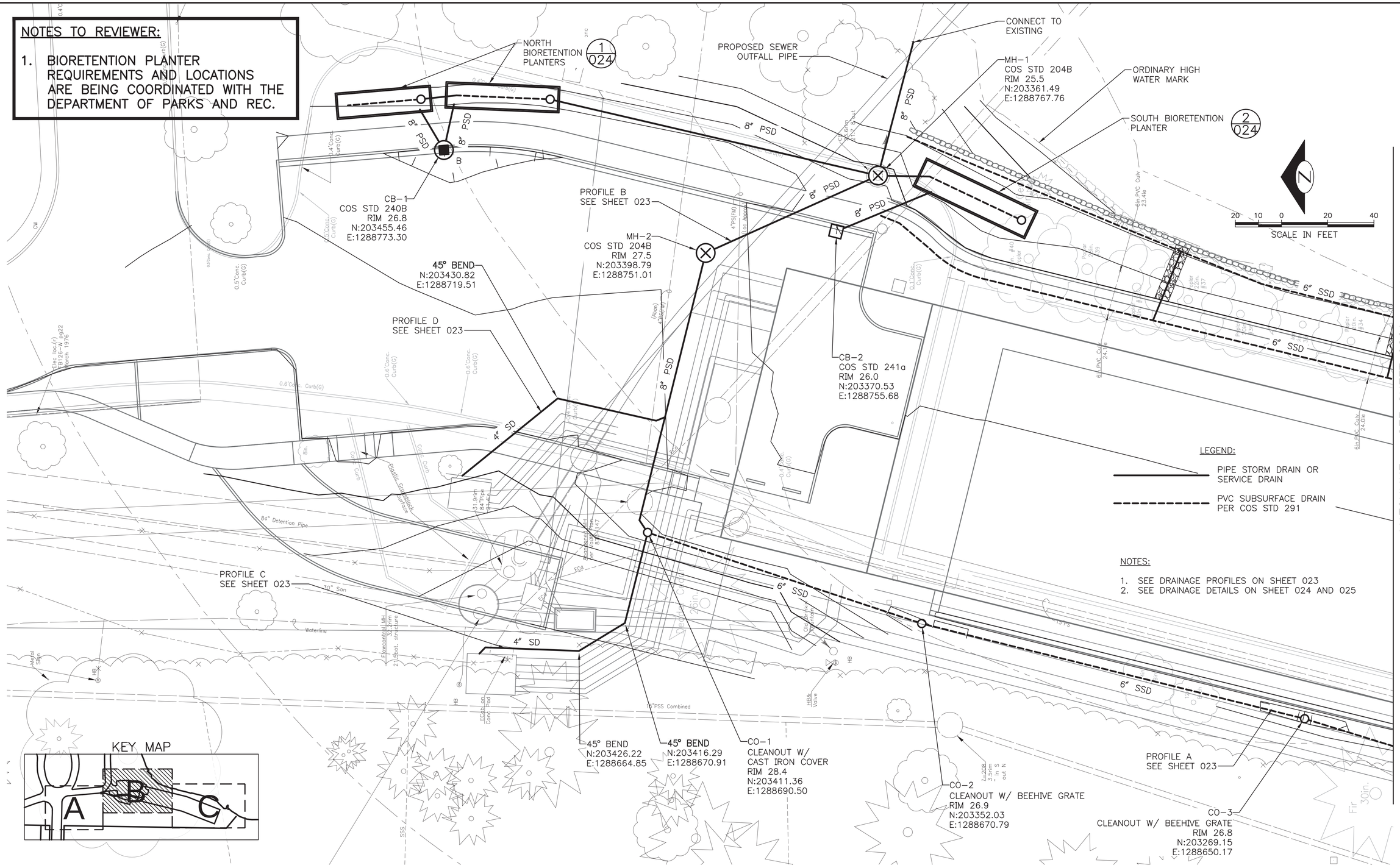

LEGEND:

PIPE STORM DRAIN OR SERVICE DRAIN

PVC SUBSURFACE DRAIN PER COS STD 291

NOTES:

1. SEE DRAINAGE PROFILES ON SHEET 023
2. SEE DRAINAGE DETAILS ON SHEET 024 AND 025

MARK	DATE	REVISIONS	MADE	CHK'D	REV'D

VAULT SERIAL NO.

C:\pwworking\sea\d0839918\022 C304102-P-STRM-44C010.dwg
pmilkein Dec-03-13 11:31am

MUP SUBMITTAL

CSO FACILITY 8A–SITE DRAINAGE PLAN–SHEET 1 OF 2

HDR Engineering, Inc.

CH2MHILL

0 ½ 1
IF THIS BAR DOES NOT MEASURE 1" THEN DRAWING IS NOT PLOTTED TO ORIGINAL SCALE.

APPROVED FOR ADVERTISING
NANCY LOCKE
DEPARTMENT OF FINANCE & ADMINISTRATIVE SERVICES
SEATTLE, WASHINGTON 20
BY:
PURCHASING & CONTRACTING SERVICES DIRECTOR

NAME OR INITIALS AND DATE
DESIGNED JE
CHECKED
DRAWN PCW
CHECKED

INITIALS AND DATE
REVIEWED:
DES. CONST.
SDOT PROJ. MGR.
RECEIVED
REVISED AS BUILT

ALL WORK SHALL BE DONE IN ACCORDANCE WITH THE CITY OF SEATTLE STANDARD PLANS AND SPECIFICATIONS AND OTHER DOCUMENTS CALLED FOR IN SECTION 0-02.3 OF THE PROJECT MANUAL.

JOHN A. ERICKSON
STATE OF WASHINGTON
47644
REGISTERED PROFESSIONAL ENGINEER

Seattle Public Utilities
City of Seattle
Ray Hoffman, Director

ORDINANCE NO.
FUND:
SCALE: 1"=10'
APPROVED
INSPECTOR'S BOOK

HENDERSON NORTH
CSO REDUCTION

JOB NO. PC C304102
R/W
CO C304102
VAULT PLAN NO.

SHEET 022 OF 320

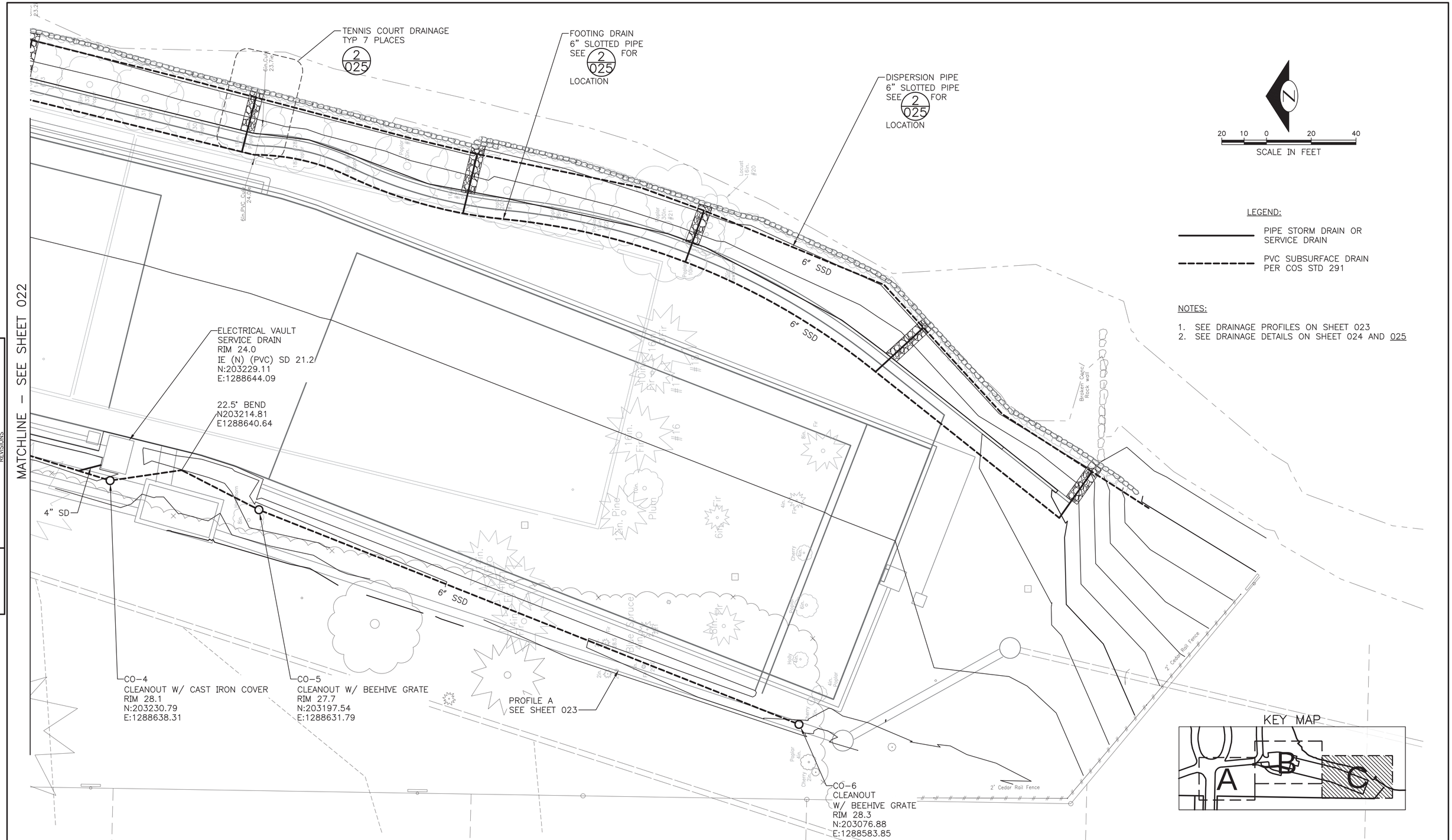

MUP SUBMITTAL

CSO FACILITY 8A–SITE DRAINAGE PLAN–SHEET 2 OF 2

VAULT SERIAL NO.	DATE	MARK	NATURE REVISIONS	MADE	CHK'D	REV'D

HDR Engineering, Inc.

CH2MHILL

0 ½ 1
IF THIS BAR DOES NOT MEASURE 1" THEN DRAWING IS NOT PLOTTED TO ORIGINAL SCALE.

APPROVED FOR ADVERTISING
NANCY LOCKE
DEPARTMENT OF FINANCE & ADMINISTRATIVE SERVICES
SEATTLE, WASHINGTON 20
BY:
PURCHASING & CONTRACTING SERVICES DIRECTOR

NAME OR INITIALS AND DATE
DESIGNED JE
CHECKED
DRAWN
CHECKED

INITIALS AND DATE
REVIEWED:
DES. CONST.
SDOT PROJ. MGR.
RECEIVED
REVISED AS BUILT

ALL WORK SHALL BE DONE IN ACCORDANCE WITH THE CITY OF SEATTLE STANDARD PLANS AND SPECIFICATIONS AND OTHER DOCUMENTS CALLED FOR IN SECTION 0-02.3 OF THE PROJECT MANUAL.

JOHN A. ERICKSON
STATE OF WASHINGTON
47644
REGISTERED PROFESSIONAL ENGINEER

Seattle Public Utilities
City of Seattle
Ray Hoffman, Director
ORDINANCE NO. APPROVED
FUND:
SCALE: 1"=10' INSPECTOR'S BOOK

HENDERSON NORTH
CSO REDUCTION

JOB NO. PC C304102
R/W
CO C304102
VAULT PLAN NO.
SHEET 022A OF 320

C:\pwworking\sea\d0383918\022A C304102-P-STRM-44C010A.dwg
pwitherm Nov-13-13 1:03pm

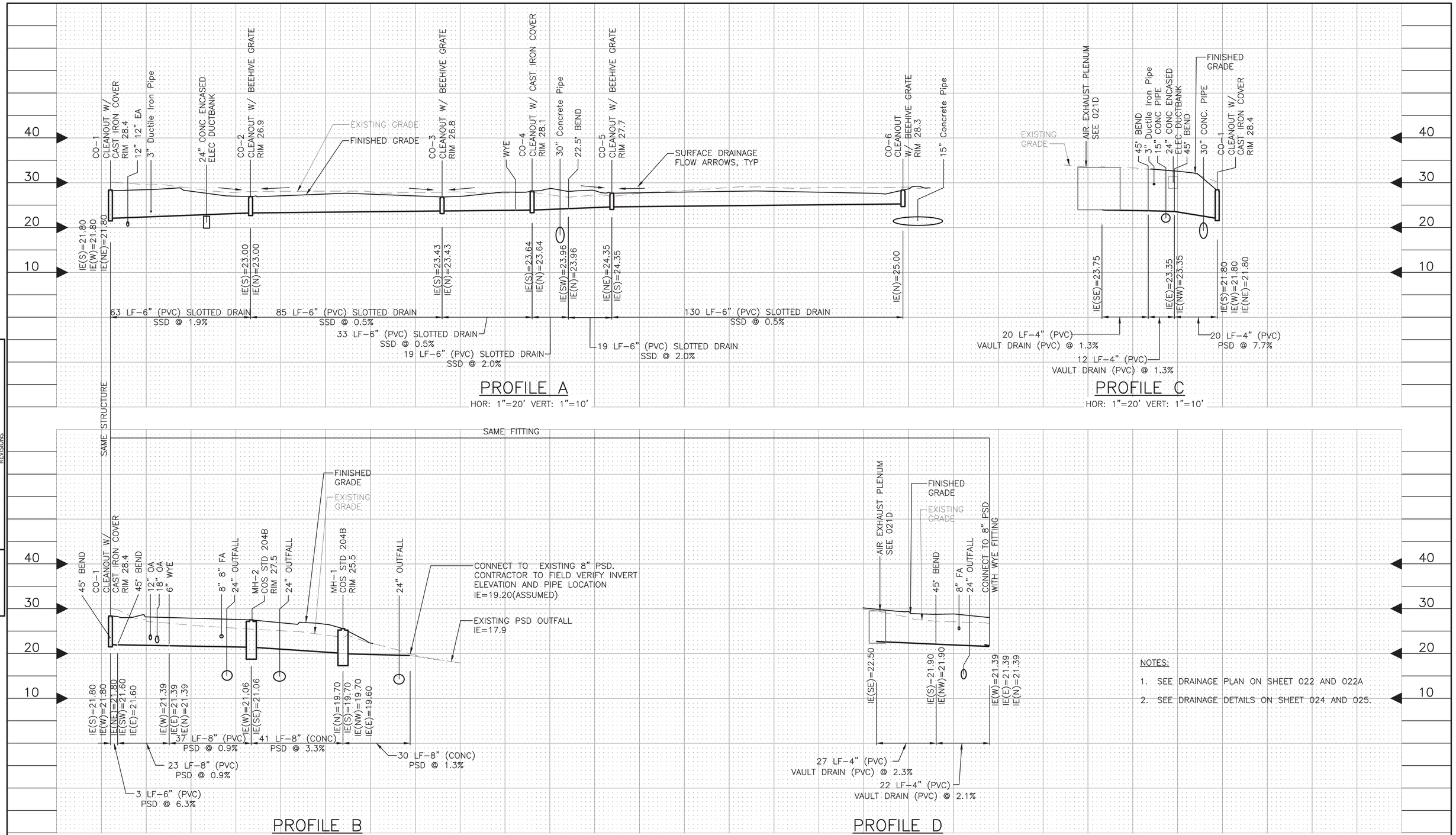

MUP SUBMITTAL

CSO FACILITY 8A–DRAINAGE PROFILE

HDR Engineering, Inc.

CH2MHILL

0 ½ 1
IF THIS BAR DOES NOT MEASURE 1" THEN DRAWING IS NOT PLOTTED TO ORIGINAL SCALE.

APPROVED FOR ADVERTISING
NANCY LOCKE
DEPARTMENT OF FINANCE & ADMINISTRATIVE SERVICES
SEATTLE, WASHINGTON 20
BY:
PURCHASING & CONTRACTING SERVICES DIRECTOR

NAME OR INITIALS AND DATE
DESIGNED
CHECKED
DRAWN PW
CHECKED

INITIALS AND DATE
REVIEWED:
DES. CONST.
SDOT PROJ. MGR.
RECEIVED
REVISED AS BUILT

ALL WORK SHALL BE DONE IN ACCORDANCE WITH THE CITY OF SEATTLE STANDARD PLANS AND SPECIFICATIONS AND OTHER DOCUMENTS CALLED FOR IN SECTION 0-02.3 OF THE PROJECT MANUAL.

JOHN A. ERICKSON STATE OF WASHINGTON 47644 REGISTERED PROFESSIONAL ENGINEER

Seattle Public Utilities
City of Seattle
Ray Hoffman, Director
ORDINANCE NO. APPROVED
FUND:
SCALE: H. 1"=20', V. 1"=10" INSPECTOR'S BOOK

HENDERSON NORTH CSO REDUCTION

JOB NO. PC C304102 R/W CO C304102
VAULT PLAN NO.
SHEET 023 OF 320

VAULT SERIAL NO.	DATE	MARK	NATURE REVISIONS	MADE	CHK'D	REV'D

C:\pwworking\sea\d0883918\023 C304102-P-STRM-44C011.dwg
pwitham Nov-14-13 9:54am

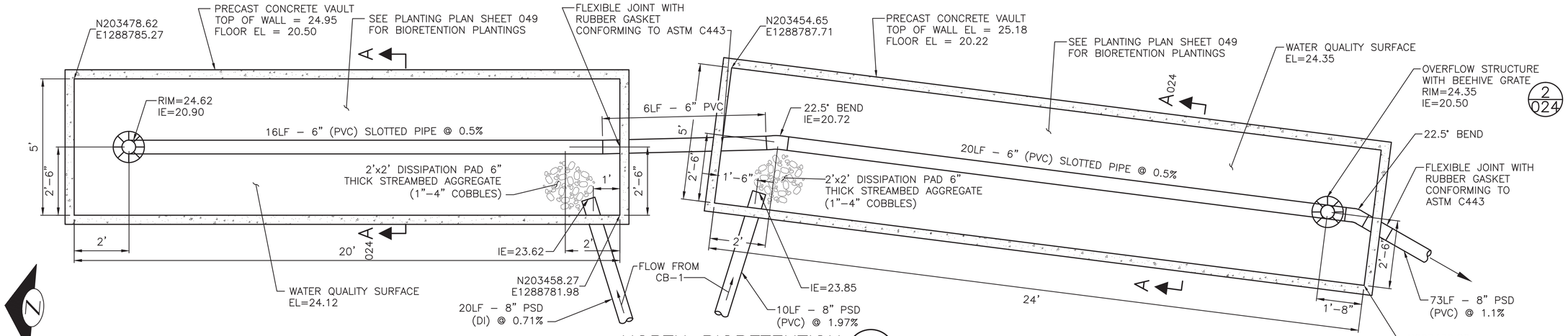

NORTH BIORETENTION PLANTER 1/022

SCALE: 1/2"=1'–0"

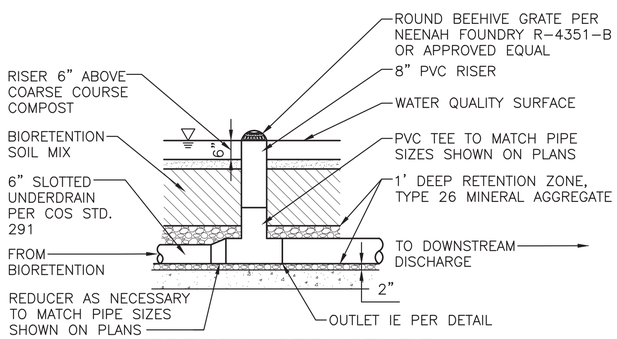

OVERFLOW STRUCTURE WITH BEEHIVE GRATE 2/024

SCALE: 1/2" = 1'–0"

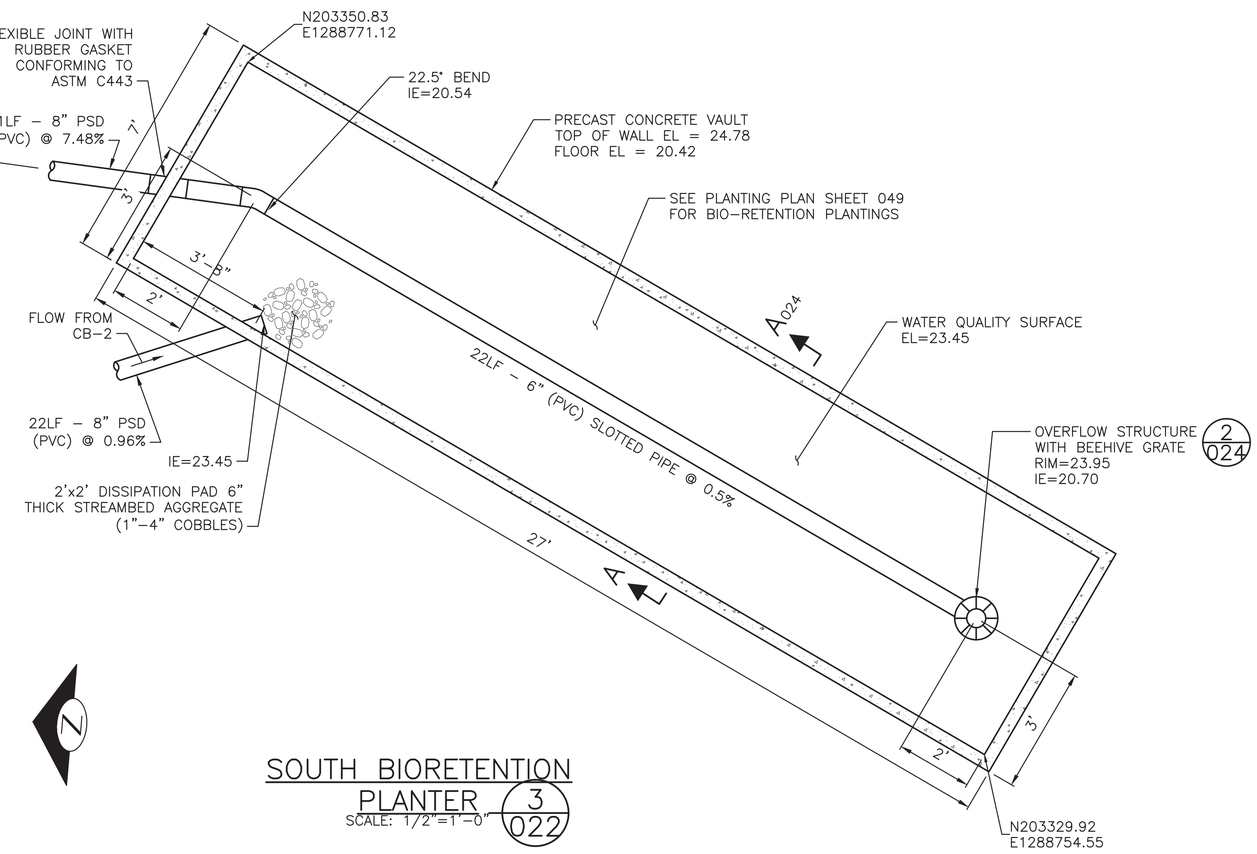

SOUTH BIORETENTION PLANTER 3/022

SCALE: 1/2"=1'–0"

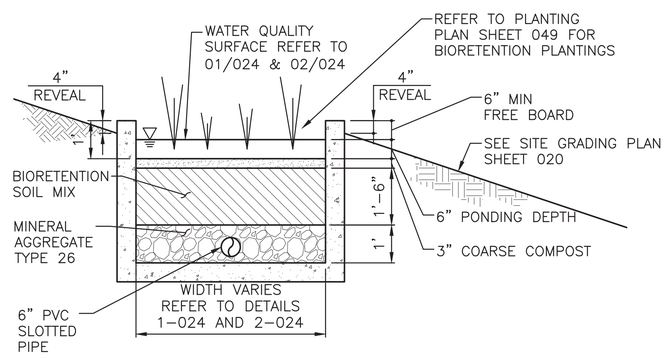

TYPICAL BIORETENTION PLANTER SECTION A–A 024

SCALE: 1/2" = 1'–0"

VAULT SERIAL NO.	DATE	MARK	NATURE REVISIONS	MADE	CHK'D	REV'D

C:\pwworking\sea\c0863918\024 C304102-P-STRM-44C012.dwg
pahlem Nov-12-13 2:36pm

MUP SUBMITTAL

HDR Engineering, Inc.

CH2MHILL

0 ½ 1
IF THIS BAR DOES NOT MEASURE 1" THEN DRAWING IS NOT PLOTTED TO ORIGINAL SCALE.

APPROVED FOR ADVERTISING
NANCY LOCKE
DEPARTMENT OF FINANCE & ADMINISTRATIVE SERVICES
SEATTLE, WASHINGTON 20
BY:
PURCHASING & CONTRACTING SERVICES DIRECTOR

NAME OR INITIALS AND DATE
DESIGNED
CHECKED
DRAWN PW
CHECKED

INITIALS AND DATE
REVIEWED:
DES. CONST.
SDOT PROJ. MGR.
RECEIVED
REVISED AS BUILT

ALL WORK SHALL BE DONE IN ACCORDANCE WITH THE CITY OF SEATTLE STANDARD PLANS AND SPECIFICATIONS AND OTHER DOCUMENTS CALLED FOR IN SECTION 0–02.3 OF THE PROJECT MANUAL.

JOHN A. ERICKSON
STATE OF WASHINGTON
47644
REGISTERED PROFESSIONAL ENGINEER

Seattle Public Utilities
City of Seattle
Ray Hoffman, Director
ORDINANCE NO.
FUND:
SCALE: AS NOTED
APPROVED
INSPECTOR'S BOOK

CSO FACILITY 8A–SITE DRAINAGE DETAILS–SHEET 1 OF 2

HENDERSON NORTH
CSO REDUCTION

JOB NO. PC C304102
R/W
CO C304102
VAULT PLAN NO.
SHEET 024 OF 320

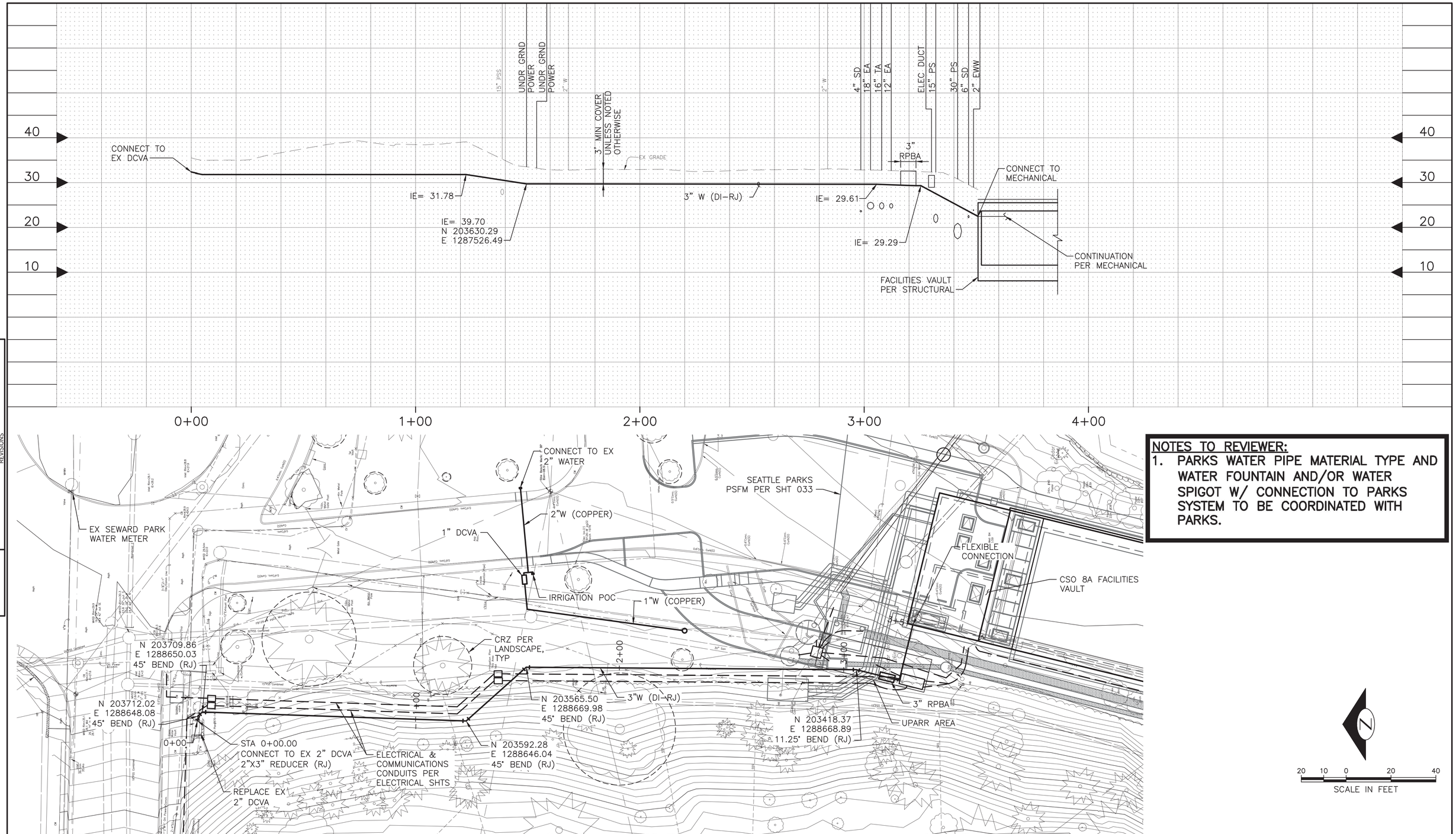

NOTES TO REVIEWER:

1. PARKS WATER PIPE MATERIAL TYPE AND WATER FOUNTAIN AND/OR WATER SPIGOT W/ CONNECTION TO PARKS SYSTEM TO BE COORDINATED WITH PARKS.

VAULT SERIAL NO.	DATE	MARK	NATURE REVISIONS	MADE	CHK'D	REV'D

C:\PWworking\SEA\d0883918\034 C304102-P-WATR-44C022.dwg
dyang1 Nov-18-13 1:48pm

MUP SUBMITTAL

CSO FACILITY 8A–WATER SERVICE PLAN AND PROFILE

HDR Engineering, Inc.

CH2MHILL

0 ½ 1
IF THIS BAR DOES NOT MEASURE 1" THEN DRAWING IS NOT PLOTTED TO ORIGINAL SCALE.

APPROVED FOR ADVERTISING
NANCY LOCKE
DEPARTMENT OF FINANCE & ADMINISTRATIVE SERVICES
SEATTLE, WASHINGTON 20
BY:
PURCHASING & CONTRACTING SERVICES DIRECTOR

NAME OR INITIALS AND DATE
DESIGNED JLW
CHECKED BOS
DRAWN DJK
CHECKED JLW

INITIALS AND DATE
REVIEWED:
DES. CONST.
SDOT PROJ. MGR.
RECEIVED
REVISED AS BUILT

ALL WORK SHALL BE DONE IN ACCORDANCE WITH THE CITY OF SEATTLE STANDARD PLANS AND SPECIFICATIONS AND OTHER DOCUMENTS CALLED FOR IN SECTION 0-02.3 OF THE PROJECT MANUAL.

JESSE WILLIAMS
STATE OF WASHINGTON
45577
REGISTERED
PROFESSIONAL ENGINEER

Seattle Public Utilities
City of Seattle
Ray Hoffman, Director
ORDINANCE NO. APPROVED
FUND:
SCALE: H. 1"=20', V. 1"=10' INSPECTOR'S BOOK

HENDERSON NORTH
CSO REDUCTION

JOB NO. PC C304102
R/W
CO C304102
VAULT PLAN NO.
SHEET 034 OF 320

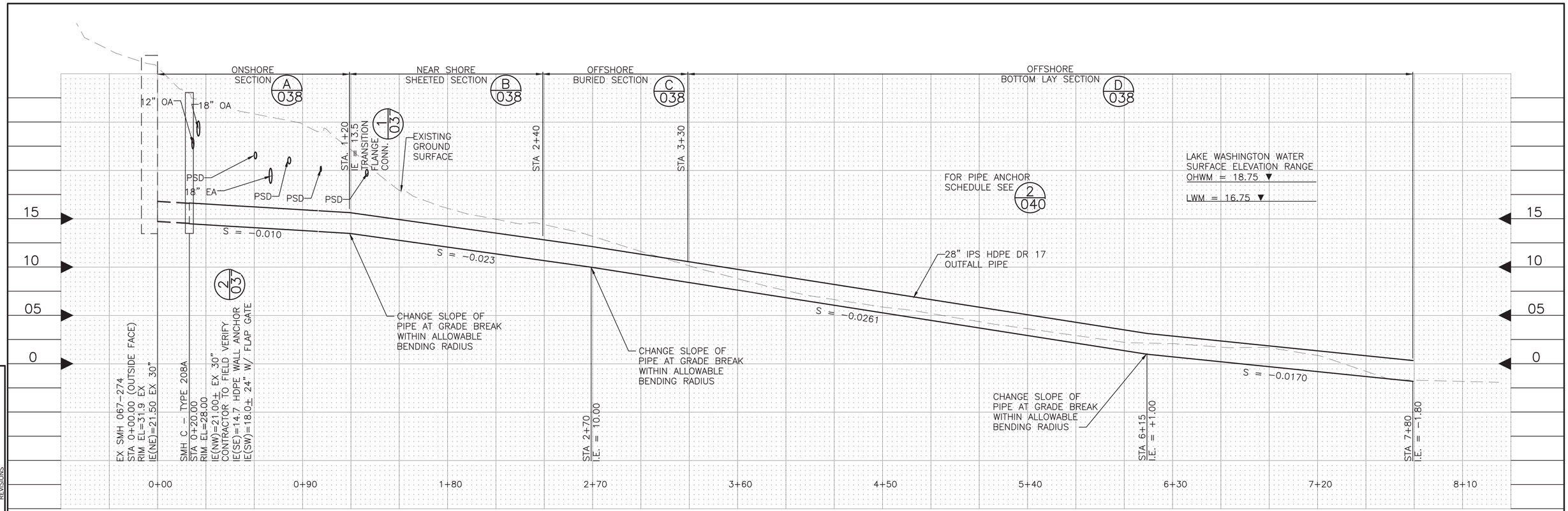

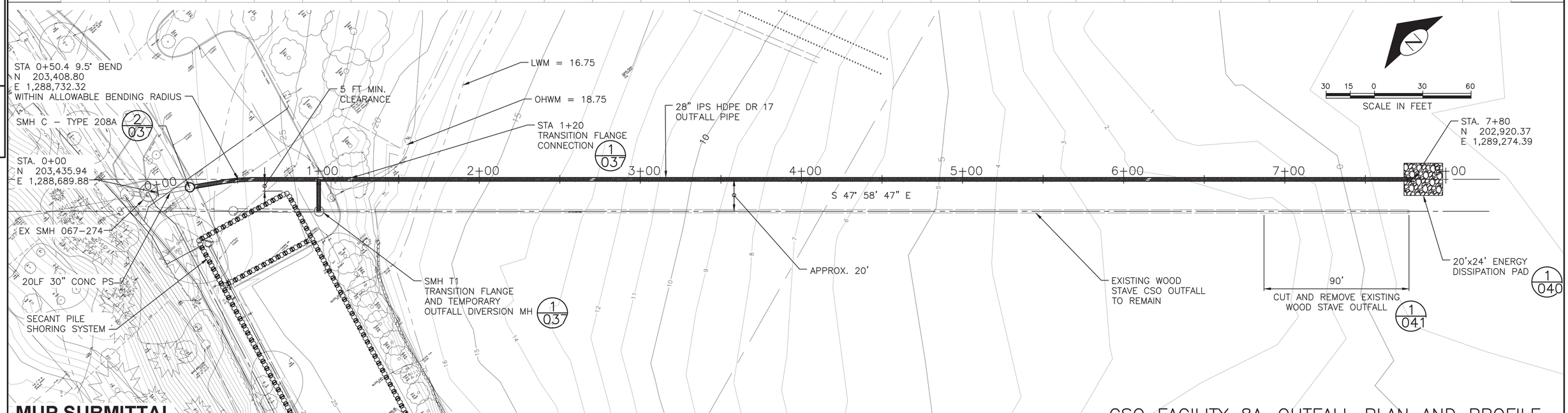

MUP SUBMITTAL

CSO FACILITY 8A–OUTFALL PLAN AND PROFILE

VAULT SERIAL NO.	DATE	MARK	NATURE REVISIONS	MADE	CHK'D	REV'D

HDR Engineering, Inc.

COSMOPOLITAN ENGINEERING GROUP

0 Ø 1
IF THIS BAR DOES NOT MEASURE 1" THEN DRAWING IS NOT PLOTTED TO ORIGINAL SCALE.

APPROVED FOR ADVERTISING
NANCY LOCKE
DEPARTMENT OF FINANCE & ADMINISTRATIVE SERVICES
SEATTLE, WASHINGTON 20
BY:
PURCHASING & CONTRACTING SERVICES DIRECTOR

NAME OR INITIALS AND DATE	INITIALS AND DATE
DESIGNED WPF	REVIEWED:
CHECKED JVG	DES. CONST. SDOT PROJ. MGR.
DRAWN JJM	RECEIVED
CHECKED JVG	REVISED AS BUILT

ALL WORK SHALL BE DONE IN ACCORDANCE WITH THE CITY OF SEATTLE STANDARD PLANS AND SPECIFICATIONS AND OTHER DOCUMENTS CALLED FOR IN SECTION 0-02.3 OF THE PROJECT MANUAL.

WILLIAM P. FOX
STATE OF WASHINGTON
23463
REGISTERED
PROFESSIONAL ENGINEER

Seattle Public Utilities
City of Seattle
Ray Hoffman, Director
ORDINANCE NO.
FUND:
SCALE: 1"=30'-0"
APPROVED
INSPECTOR'S BOOK

HENDERSON NORTH CSO REDUCTION

JOB NO. PC C304102 R/W CO C304102
VAULT PLAN NO.
SHEET 036 OF 320

C:\pwworking\sea\d0853918\036 C304102-P-Site-44C024.dwg
Admin Nov-15-13 1:50pm

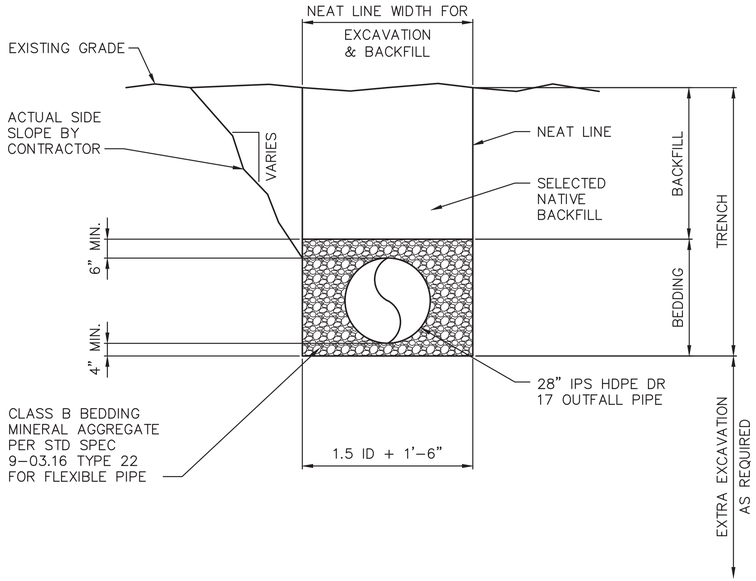

TYPICAL ONSHORE SECTION (A / 036)
NO SCALE

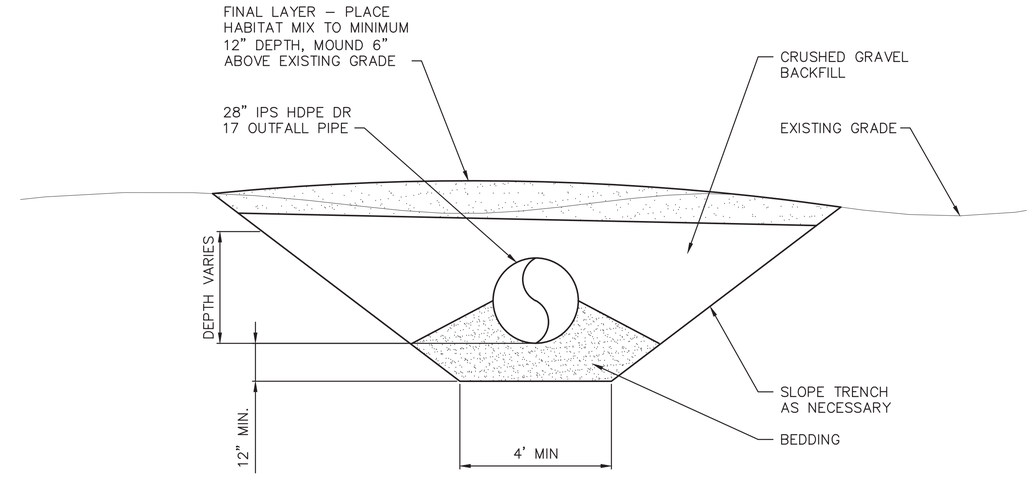

TYPICAL OFFSHORE BURIED SECTION (C / 036)
NO SCALE

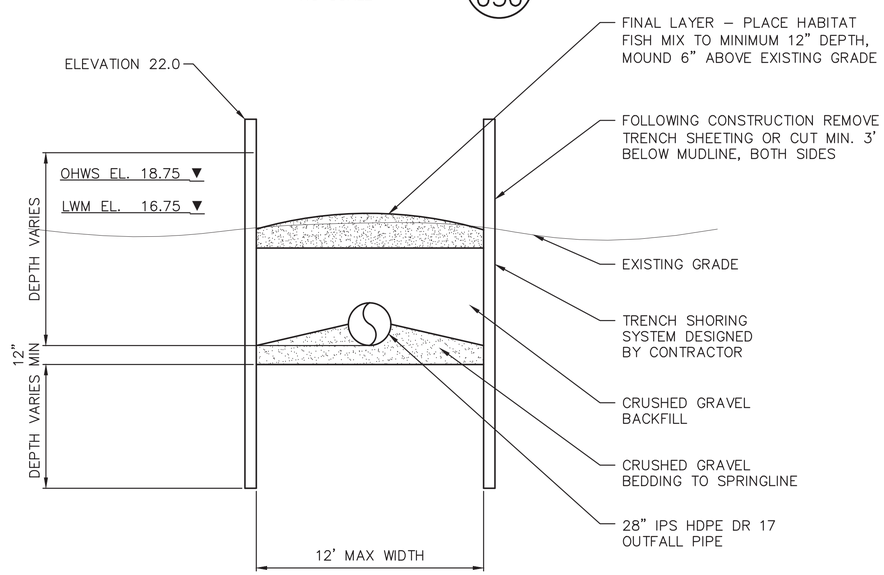

TYPICAL NEARSHORE SHEETED SECTION (B / 036)
NO SCALE

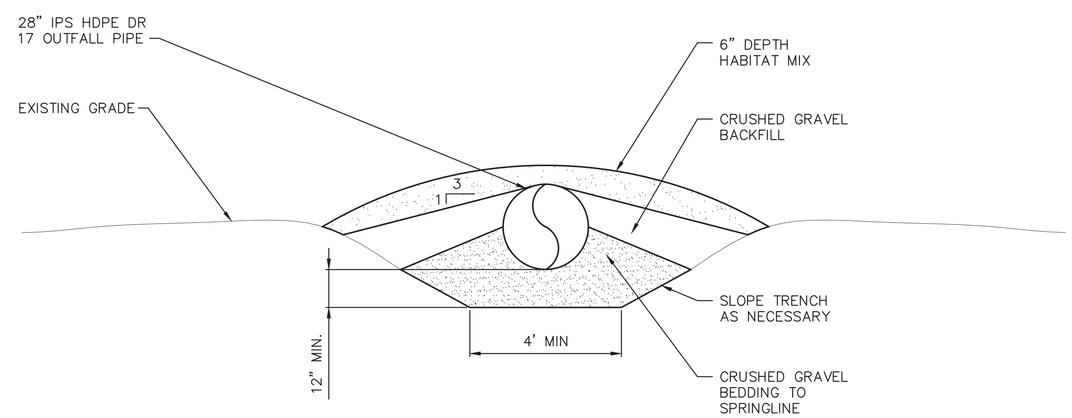

TYPICAL OFFSHORE BOTTOM LAY SECTION (D / 036)
NO SCALE

MUP SUBMITTAL

CSO FACILITY 8A-OUTFALL SECTIONS

HDR Engineering, Inc.

COSMOPOLITAN ENGINEERING GROUP

0 Ø 1
IF THIS BAR DOES NOT MEASURE 1" THEN DRAWING IS NOT PLOTTED TO ORIGINAL SCALE.

APPROVED FOR ADVERTISING
NANCY LOCKE
DEPARTMENT OF FINANCE & ADMINISTRATIVE SERVICES
SEATTLE, WASHINGTON 20
BY:
PURCHASING & CONTRACTING SERVICES DIRECTOR

NAME OR INITIALS AND DATE	INITIALS AND DATE
DESIGNED WPF	REVIEWED: DES. CONST. SDOT PROJ. MGR.
CHECKED JVG	
DRAWN JJM	RECEIVED
CHECKED JVG	REVISED AS BUILT

ALL WORK SHALL BE DONE IN ACCORDANCE WITH THE CITY OF SEATTLE STANDARD PLANS AND SPECIFICATIONS AND OTHER DOCUMENTS CALLED FOR IN SECTION 0-02.3 OF THE PROJECT MANUAL.

WILLIAM P. FOX
STATE OF WASHINGTON
23463
REGISTERED
PROFESSIONAL ENGINEER

Seattle Public Utilities
City of Seattle
Ray Hoffman, Director
ORDINANCE NO. APPROVED
FUND:
SCALE: H. 1"=20', V. 1"=10' INSPECTOR'S BOOK

HENDERSON NORTH
CSO REDUCTION

JOB NO. PC C304102 R/W CO C304102
VAULT PLAN NO.
SHEET 038 OF 320

VAULT	SERIAL NO.	DATE	MARK	NATURE REVISIONS	MADE	CHK'D	REV'D

C:\pwworking\sea\d0683918\038 C304102-P-Site-44C026.dwg
Admin Nov-15-13 1:35pm

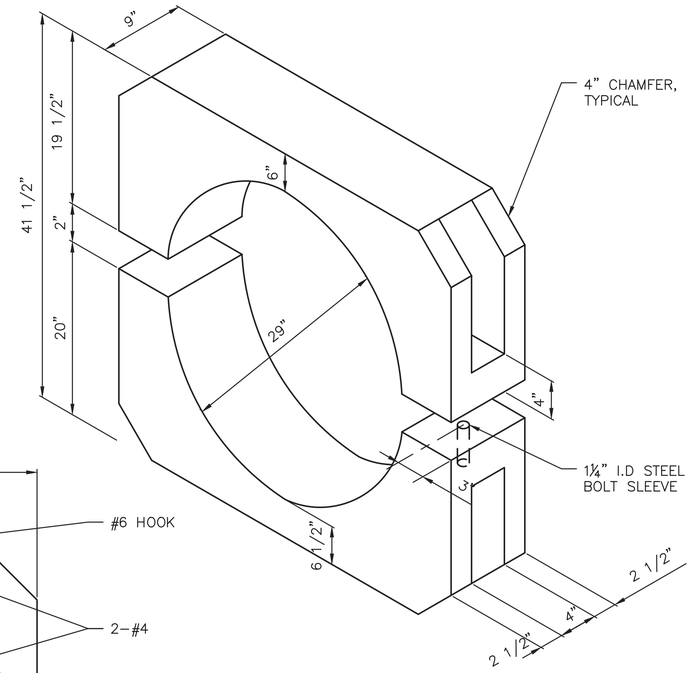

ISOMETRIC VIEW

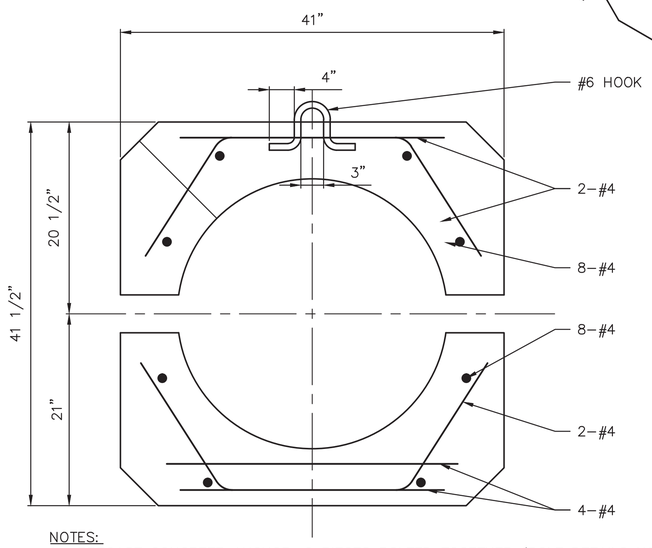

NOTES:

1. PRECAST CONCRETE ANCHOR, 2 PIECES BOLTED TOGETHER (BOLT DETAILS NOT SHOWN)
2. ALL REBAR TO BE GRADE 60. REINFORCEMENT TO BE 2" FROM EXTERIOR SURFACE.
3. CONCRETE SHALL BE CLASS 4000
4. 1/2" NEOPRENE PAD, CEMENT TO ANCHORS ALL AROUND PIPE, FULL ANCHOR WIDTH.
5. BOLTS SHALL BE 316 SS, 1"ø, 2 LARGE OD FLAT WASHERS, NUT(S). MAY USE ALL–THREAD ROD.

REBAR PLACEMENT

CONCRETE BOLT–ON ANCHOR DETAIL (1/040)
NO SCALE

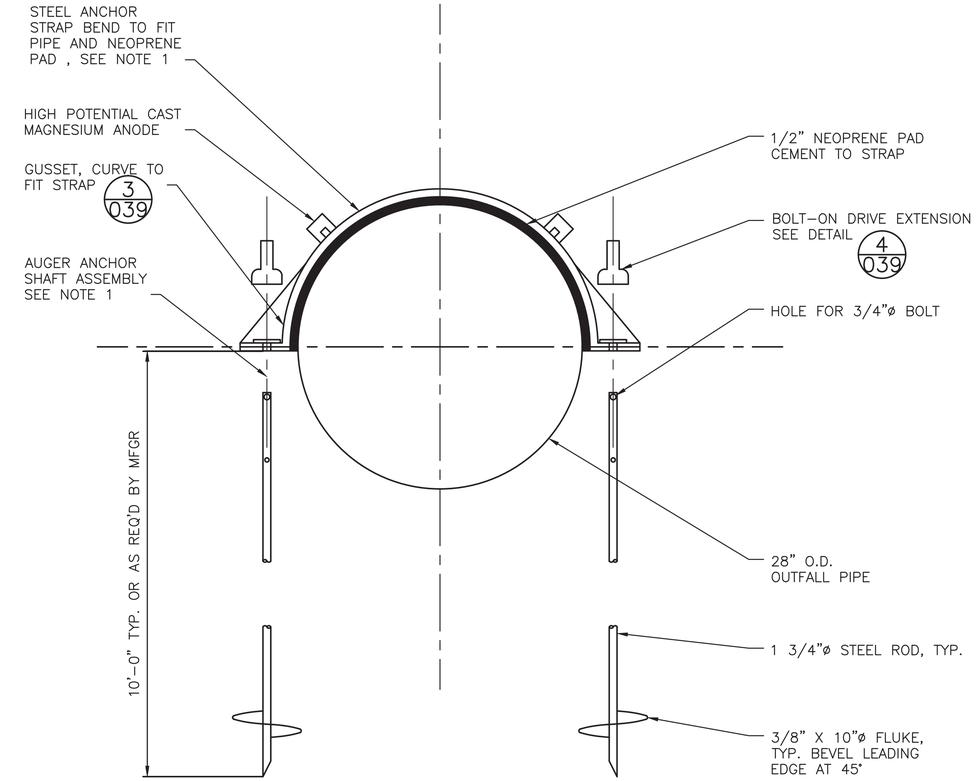

NOTES:
1. HOT DIP GALVANIZE AFTER FABRICATION EXCEPT ANODE STUDS

MECHANICAL AUGER ANCHOR DETAIL (2/040)
NO SCALE

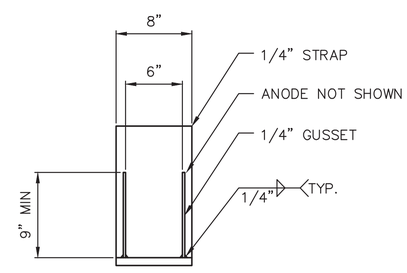

GUSSET DETAIL (3/039)
NO SCALE

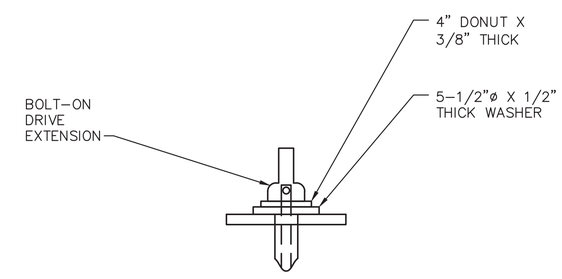

ANCHOR FASTENING DETAIL (4/039)
NO SCALE

MUP SUBMITTAL

CSO FACILITY 8A–OUTFALL ANCHOR DETAILS

MARK	DATE	VAULT SERIAL NO.	NATURE REVISIONS	MADE	CHK'D	REV'D

HDR Engineering, Inc.

COSMOPOLITAN ENGINEERING GROUP

0 Ø 1
IF THIS BAR DOES NOT MEASURE 1" THEN DRAWING IS NOT PLOTTED TO ORIGINAL SCALE.

APPROVED FOR ADVERTISING
NANCY LOCKE
DEPARTMENT OF FINANCE & ADMINISTRATIVE SERVICES
SEATTLE, WASHINGTON 20
BY:
PURCHASING & CONTRACTING SERVICES DIRECTOR

NAME OR INITIALS AND DATE	INITIALS AND DATE
DESIGNED WPF	REVIEWED: DES. CONST. SDOT PROJ. MGR.
CHECKED JVG	
DRAWN JJM	RECEIVED
CHECKED JVG	REVISED AS BUILT

ALL WORK SHALL BE DONE IN ACCORDANCE WITH THE CITY OF SEATTLE STANDARD PLANS AND SPECIFICATIONS AND OTHER DOCUMENTS CALLED FOR IN SECTION 0–02.3 OF THE PROJECT MANUAL.

WILLIAM P. FOX, STATE OF WASHINGTON, 23463, REGISTERED PROFESSIONAL ENGINEER

Seattle Public Utilities
City of Seattle
Ray Hoffman, Director
ORDINANCE NO. APPROVED
FUND:
SCALE: H. 1"=20', V. 1"=10' INSPECTOR'S BOOK

HENDERSON NORTH CSO REDUCTION

JOB NO. PC C304102 R/W CO C304102
VAULT PLAN NO.
SHEET 039 OF 320

C:\pwworking\sea\d0883918\039 C304102-P-Site-44C027.dwg
Admin Nov-13-13 1:31pm

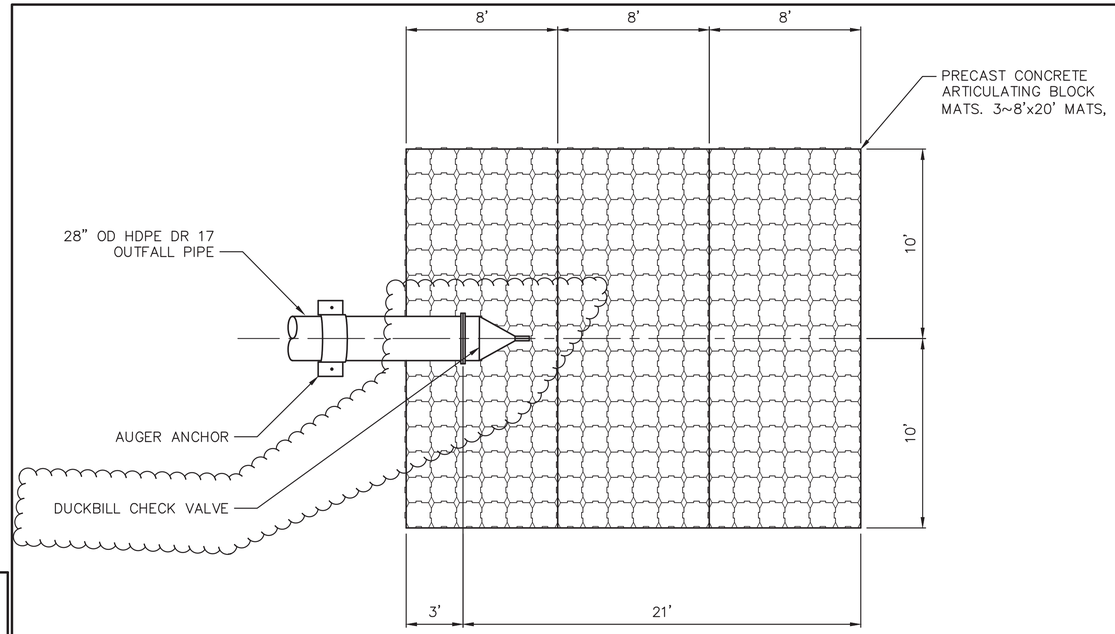

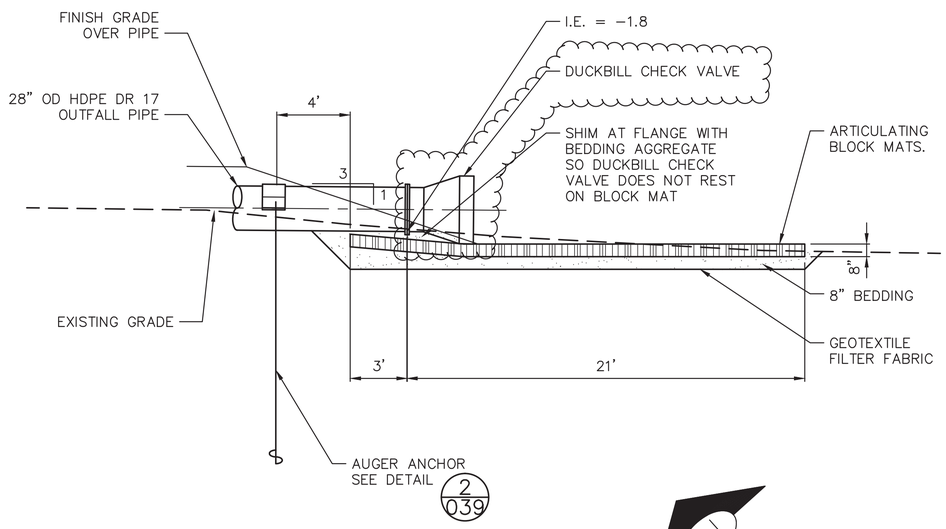

ENERGY DISSIPATION PAD DETAIL 1/036

NO SCALE

DISTANCE FROM OUTFALL TERMINUS	PRECAST CONCRETE BOLT–ON ANCHOR STATION SEE DETAIL 1/039	MECHANICAL AUGER STATION SEE DETAIL 2/039
10	–	7+70
25	7+55	–
40	–	7+40
55	7+25	–
70	–	7+10
85	6+95	–
100	–	6+80
115	6+65	–
130	–	6+50
145	6+35	
160	–	6+20
175	6+05	–
190	–	5+90
205	5+75	–
220	–	5+60
235	5+45	–
250	–	5+30
265	5+15	–
280	–	5+00
295	4+85	–
310	–	4+70
325	4+55	–
340	–	4+40
355	4+25	–
370	–	4+10
385	3+95	–
400	–	3+80
415	3+65	
430	3+50	
445	3+35	
460	3+20	
475	3+05	
490	2+90	
505	2+75	
520	2+60	
535	2+45	
550	2+30	
565	2+15	
580	2+00	
595	1+85	
610	1+70	
625	1+55	
640	1+40	
655	1+25	

PIPE ANCHOR SCHEDULE 2/036

NO SCALE

VAULT SERIAL NO.	DATE	MARK	NATURE REVISIONS	MADE	CHK'D	REV'D

C:\pwworking\sea\d0883918\040 C304102-P-Site-44C028.dwg, 2/20/2014 6:59:33 PM, DWG To PDF.pc3
C:\pwworking\sea\d0863918\040 C304102-P-Site-44C028.dwg
Admin Feb-20-14 6:59pm

MUP SUBMITTAL

CSO FACILITY 8A–OUTFALL TERMINUS DETAILS

HDR Engineering, Inc.

COSMOPOLITAN ENGINEERING GROUP

0 1/2 1
IF THIS BAR DOES NOT MEASURE 1" THEN DRAWING IS NOT PLOTTED TO ORIGINAL SCALE.

APPROVED FOR ADVERTISING
NANCY LOCKE
DEPARTMENT OF FINANCE & ADMINISTRATIVE SERVICES
SEATTLE, WASHINGTON 20
BY:
PURCHASING & CONTRACTING SERVICES DIRECTOR

NAME OR INITIALS AND DATE
DESIGNED WPF
CHECKED JVD
DRAWN JJM
CHECKED JVG

INITIALS AND DATE
REVIEWED:
DES. CONST.
SDOT PROJ. MGR.
RECEIVED
REVISED AS BUILT

ALL WORK SHALL BE DONE IN ACCORDANCE WITH THE CITY OF SEATTLE STANDARD PLANS AND SPECIFICATIONS AND OTHER DOCUMENTS CALLED FOR IN SECTION 0–02.3 OF THE PROJECT MANUAL.

WILLIAM P. FOX
STATE OF WASHINGTON
23463
REGISTERED
PROFESSIONAL ENGINEER

Seattle Public Utilities
City of Seattle
Ray Hoffman, Director
ORDINANCE NO.
FUND:
SCALE: AS NOTED
APPROVED
INSPECTOR'S BOOK

HENDERSON NORTH CSO REDUCTION

JOB NO. PC C304102 R/W CO C304102
VAULT PLAN NO.
SHEET 040 OF 320

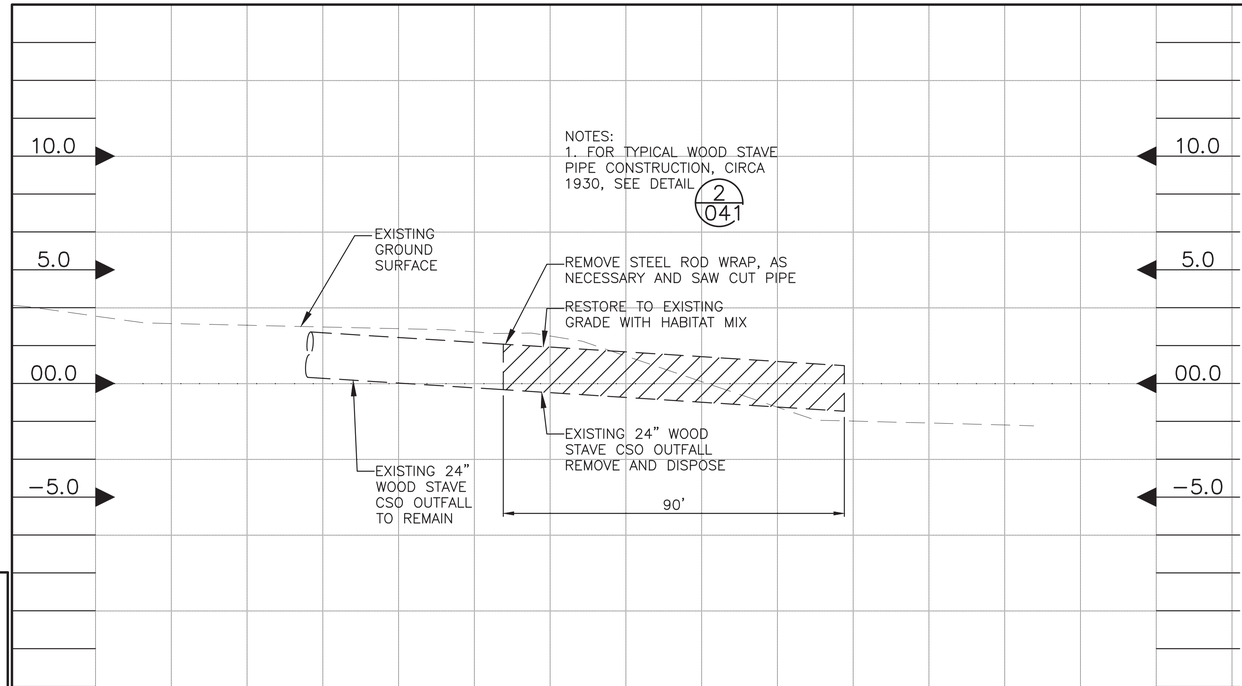

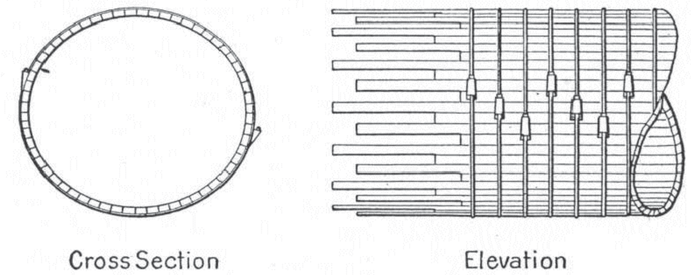

WOOD STAVE PIPE ILLUSTRATION
DETAIL 2/041
NO SCALE

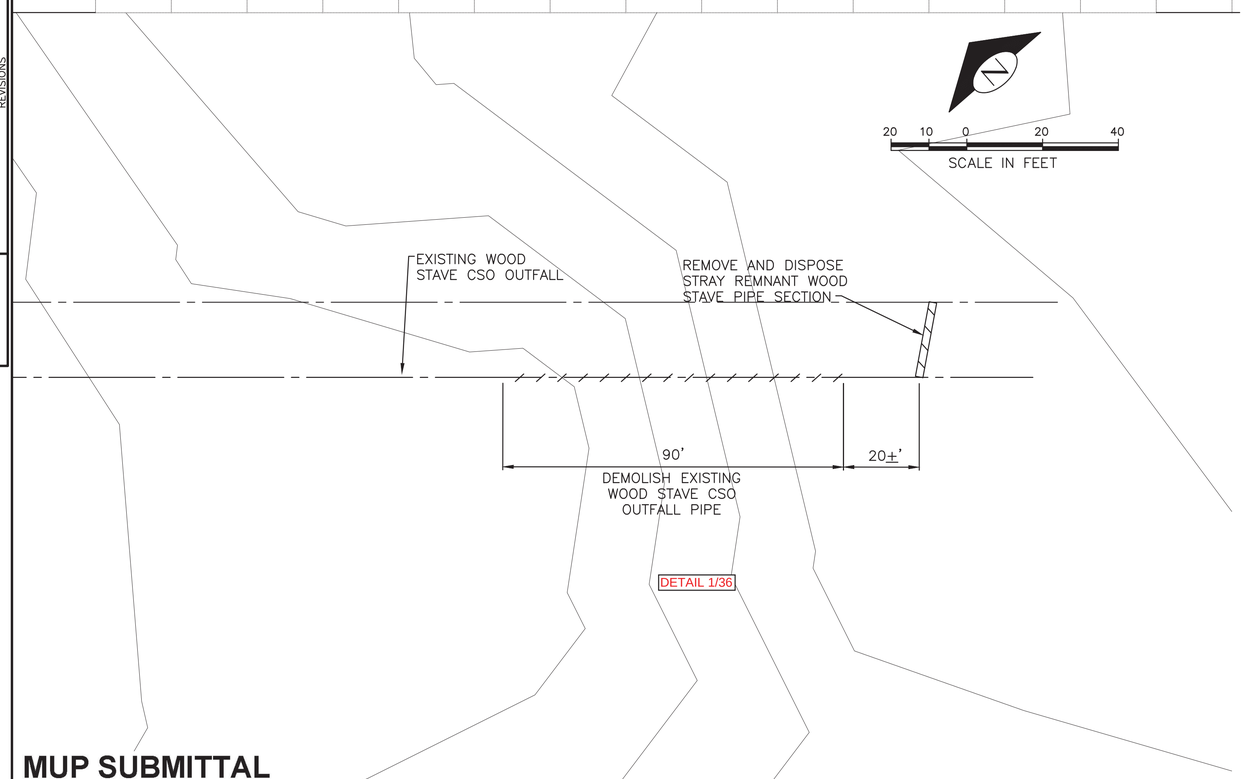

VAULT SERIAL NO.	DATE	MARK	NATURE REVISIONS	MADE	CHK'D	REV'D

MUP SUBMITTAL

CSO FACILITY 8A–WOOD STAVE OUTFALL PIPE REMOVAL

0 1/2 1
IF THIS BAR DOES NOT MEASURE 1" THEN DRAWING IS NOT PLOTTED TO ORIGINAL SCALE.

APPROVED FOR ADVERTISING
NANCY LOCKE
DEPARTMENT OF FINANCE & ADMINISTRATIVE SERVICES
SEATTLE, WASHINGTON 20
BY:
PURCHASING & CONTRACTING SERVICES DIRECTOR

NAME OR INITIALS AND DATE	INITIALS AND DATE
DESIGNED WPF	REVIEWED: DES. CONST. SDOT PROJ. MGR.
CHECKED JVG	
DRAWN JJM	RECEIVED
CHECKED JVG	REVISED AS BUILT

ALL WORK SHALL BE DONE IN ACCORDANCE WITH THE CITY OF SEATTLE STANDARD PLANS AND SPECIFICATIONS AND OTHER DOCUMENTS CALLED FOR IN SECTION 0-02.3 OF THE PROJECT MANUAL.

WILLIAM P. FOX
STATE OF WASHINGTON
23463
REGISTERED
PROFESSIONAL ENGINEER

Seattle Public Utilities
City of Seattle
Ray Hoffman, Director
ORDINANCE NO. APPROVED
FUND:
SCALE: H. 1"=20', V. 1"=10' INSPECTOR'S BOOK

HENDERSON NORTH CSO REDUCTION

JOB NO. PC C304102 R/W CO C304102
VAULT PLAN NO.
SHEET 041 OF 320

C:\pwworking\sea\d0863918\041 C304102-P-Site-44C029.dwg
Admin Nov-13-13 1:23pm

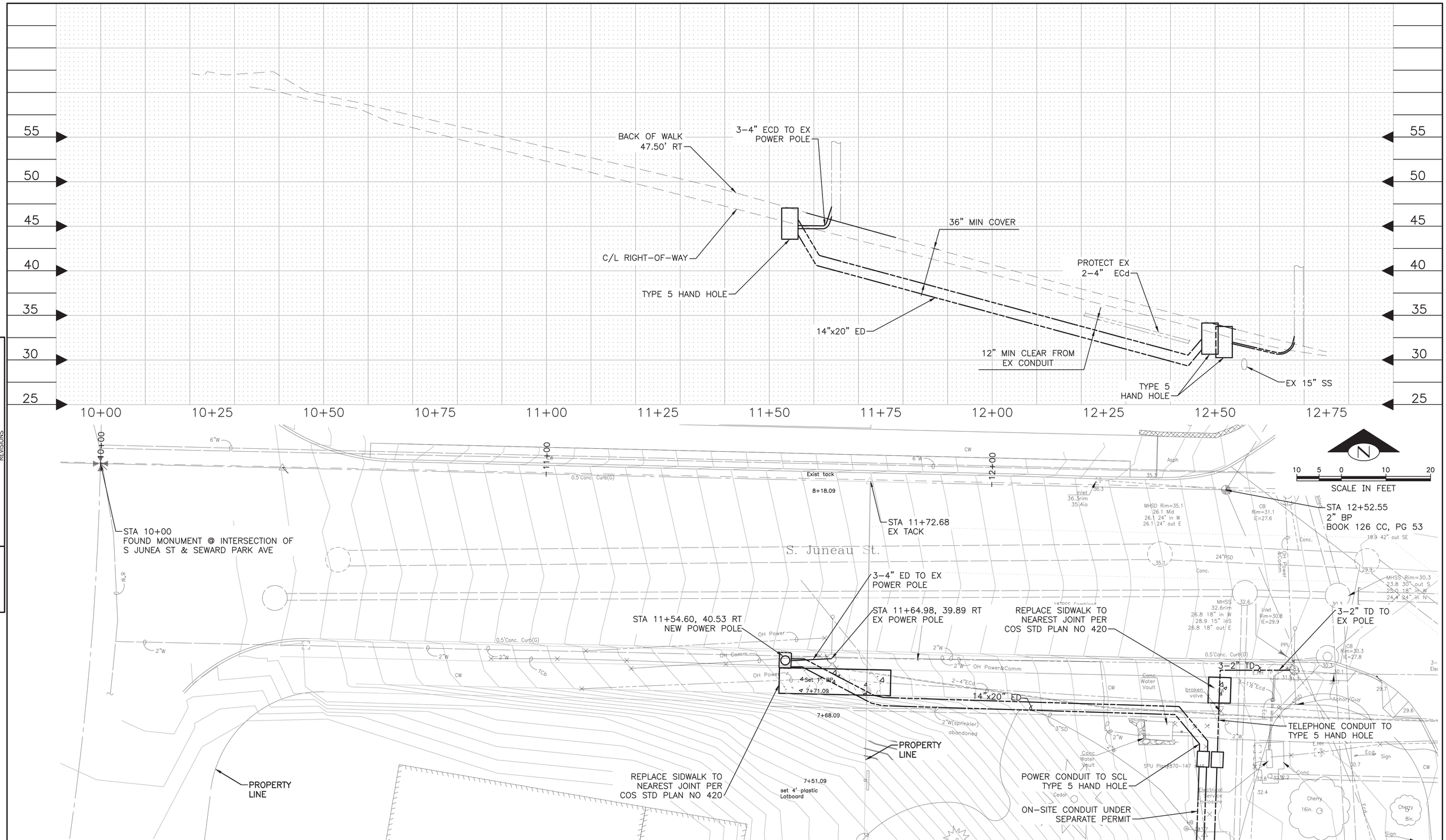

VAULT SERIAL NO.	DATE	MARK	NATURE REVISIONS	MADE	CHK'D	REV'D

C:\pwworking\sea\d0883918\043 C304102-P-SITE-44C0031.dwg
diamneb Nov-25-13 8:14am

MUP SUBMITTAL

CSO FACILITY 8A–JUNEAU STREET IMPROVEMENT PLAN

HDR Engineering, Inc.

LPD engineering pllc

REVIEWED BY SPU/WATER ENGINEERING ..... 20.....

REVIEWED BY SPU/DRAINAGE ..... 20.....

APPROVED BY SDOT STREET IMPROVEMENT PERMITTING ..... 20.....

APPROVED FOR ADVERTISING
NANCY LOCKE
DEPARTMENT OF FINANCE & ADMINISTRATIVE SERVICES
SEATTLE, WASHINGTON 20

BY:
PURCHASING & CONTRACTING SERVICES DIRECTOR

NAME OR INITIALS AND DATE	INITIALS AND DATE
DESIGNED JAS	REVIEWED: DES. CONST. SDOT PROJ. MGR.
CHECKED NFH	
DRAWN DMB	RECEIVED
CHECKED NFH	REVISED AS BUILT

ALL WORK SHALL BE DONE IN ACCORDANCE WITH THE CITY OF SEATTLE STANDARD PLANS AND SPECIFICATIONS AND OTHER DOCUMENTS CALLED FOR IN SECTION 0-02.3 OF THE PROJECT MANUAL.

LAURIE J. PEARR
STATE OF WASHINGTON
30766
REGISTERED
PROFESSIONAL ENGINEER

Seattle Public Utilities

City of Seattle
Ray Hoffman, Director

ORDINANCE NO.
FUND:
SCALE: 1"=10'

APPROVED
INSPECTOR'S BOOK

HENDERSON NORTH CSO REDUCTION

JOB NO. PC C304102 R/W CO C304102

VAULT PLAN NO.

SHEET 043 OF 320

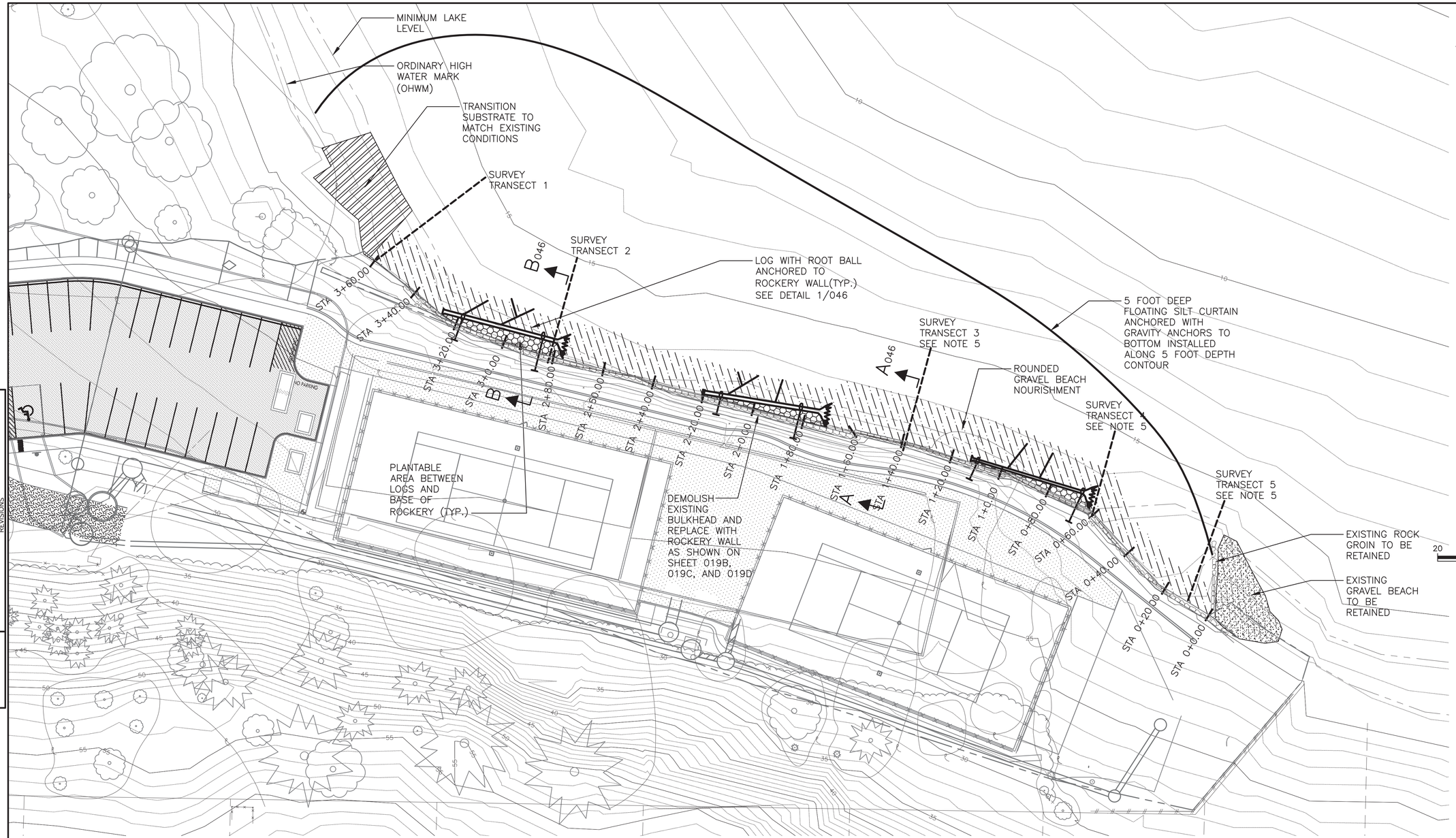

NOTES:

1. ROUNDED GRAVEL BEACH NOURISHMENT MATERIAL SHALL BE OF THE SIZE, SHAPE, AND QUALITY AS SPECIFIED IN THE SPECIFICATIONS. NO MORE THAN 300 CY OF MATERIAL WILL BE ADDED BELOW THE OHWM.
2. LOGS WITH ROOT BALLS SHALL BE DEODORA CEDAR OR DOUGLAS FIR TREES TO BE REMOVED FROM THE ADJACENT UPLAND AREA AS PART OF THE PROJECT AS SHOWN ON SHEET 17 AND PER THE SPECIFICATIONS. BOTH ENDS OF THE LOGS SHALL BE INSTALLED SUCH THAT THEY REST AGAINST THE BASE OF THE ROCKERY WALL.
3. THE LOGS SHALL BE ANCHORED WITH TWO DEAD MAN ANCHORS FOR EACH LOG AS SHOWN ON SHEET 046 AND PER THE SPECIFICATIONS.
4. PLANTABLE SOIL PER THE SPECIFICATIONS.
5. THE CONTRACTOR SHALL SURVEY THE SHORELINE PRIOR TO CONSTRUCTION AND AFTER COMPLETION OF THE SHORELINE ENHANCEMENT WORK PER THE SPECIFICATIONS.

VAULT SERIAL NO.	DATE	MARK	NATURE REVISIONS	MADE	CHK'D	REV'D

C:\pwworking\sea\d0383918\044 C304102-P-MISC-440032.dwg
bdeffrees Nov-15-13 11:07am

MUP SUBMITTAL

HDR Engineering, Inc.

CH2MHILL

0 ½ 1
IF THIS BAR DOES NOT MEASURE 1" THEN DRAWING IS NOT PLOTTED TO ORIGINAL SCALE.

APPROVED FOR ADVERTISING
NANCY LOCKE
DEPARTMENT OF FINANCE & ADMINISTRATIVE SERVICES
SEATTLE, WASHINGTON 20
BY:
PURCHASING & CONTRACTING SERVICES DIRECTOR

NAME OR INITIALS AND DATE	INITIALS AND DATE
DESIGNED	REVIEWED: DES. CONST. SDOT PROJ. MGR.
CHECKED	
DRAWN PW	RECEIVED
CHECKED	REVISED AS BUILT

ALL WORK SHALL BE DONE IN ACCORDANCE WITH THE CITY OF SEATTLE STANDARD PLANS AND SPECIFICATIONS AND OTHER DOCUMENTS CALLED FOR IN SECTION 0-02.3 OF THE PROJECT MANUAL.

CSO FACILITY 8A–SHORELINE ENHANCEMENT PLAN–SHEET 1 OF 2

Seattle Public Utilities
City of Seattle
Ray Hoffman, Director

ORDINANCE NO. APPROVED
FUND:
SCALE: 1"=20' INSPECTOR'S BOOK

HENDERSON NORTH CSO REDUCTION

JOB NO. PC C304102 R/W CO C304102
VAULT PLAN NO.
SHEET 044 OF 320

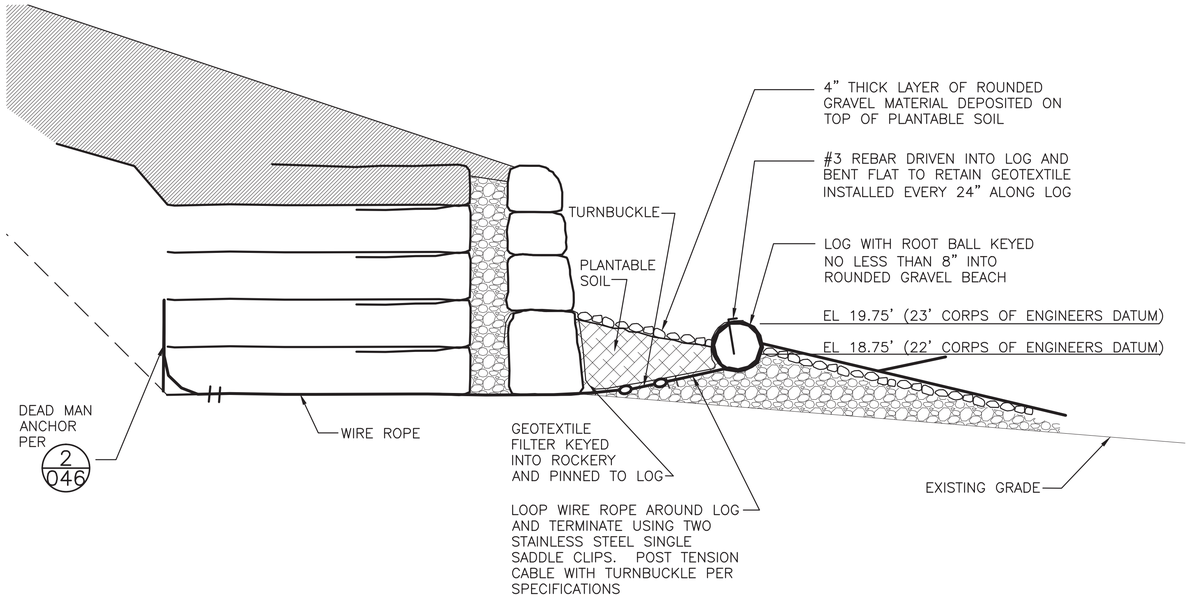

TYPICAL DETAIL 1/046
SCALE: 1/2" = 1'-0"

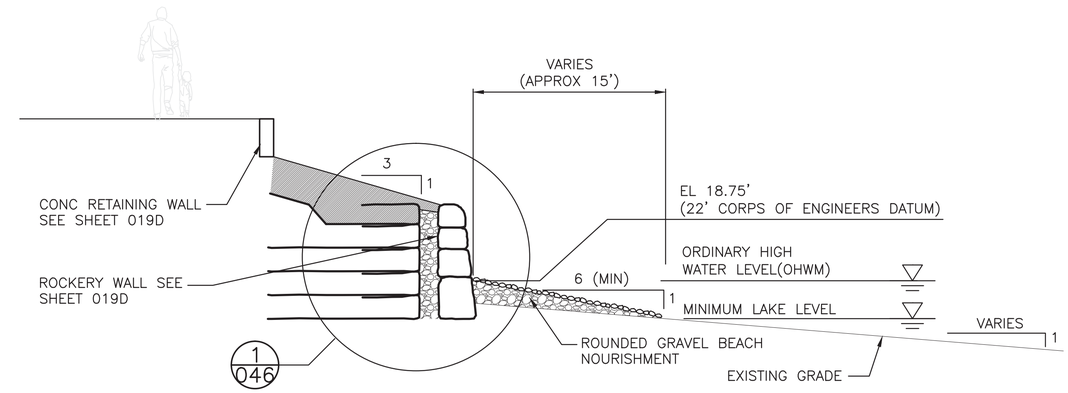

TYPICAL SECTION A-A046
SCALE: 1/4"=1'-0"_XREF

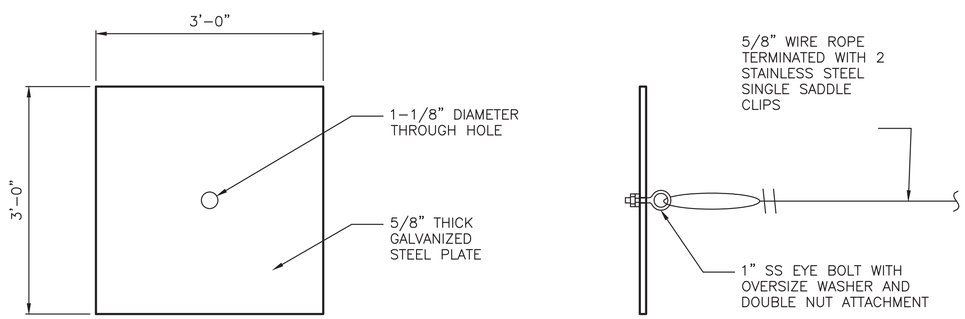

PLAN

PROFILE

DEAD MAN ANCHOR TYPICAL DETAIL 2/046
SCALE: 1" = 1'-0"

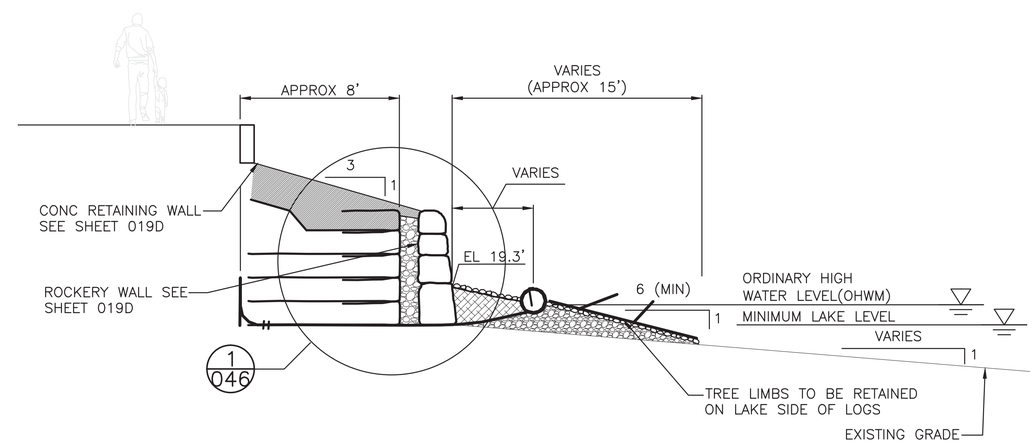

TYPICAL SECTION B-B046
SCALE: 1/4"=1'-0"_XREF

VAULT SERIAL NO.	DATE	MARK	NATURE REVISIONS	MADE	CHK'D	REV'D

C:\pwworking\sea\d0838318\046 C304102-P-MISC-440034.dwg
bdefrees Nov-15-15 12:00pm

MUP SUBMITTAL

HDR Engineering, Inc.

CH2MHILL

0 ½ 1
IF THIS BAR DOES NOT MEASURE 1" THEN DRAWING IS NOT PLOTTED TO ORIGINAL SCALE.

APPROVED FOR ADVERTISING
NANCY LOCKE
DEPARTMENT OF FINANCE & ADMINISTRATIVE SERVICES
SEATTLE, WASHINGTON 20
BY:
PURCHASING & CONTRACTING SERVICES DIRECTOR

NAME OR INITIALS AND DATE	INITIALS AND DATE
DESIGNED	REVIEWED: DES. CONST. SDOT PROJ. MGR.
CHECKED	
DRAWN	RECEIVED
CHECKED	REVISED AS BUILT

ALL WORK SHALL BE DONE IN ACCORDANCE WITH THE CITY OF SEATTLE STANDARD PLANS AND SPECIFICATIONS AND OTHER DOCUMENTS CALLED FOR IN SECTION 0-02.3 OF THE PROJECT MANUAL.

CSO FACILITY 8A-SHORELINE ENHANCEMENT SECTIONS

Seattle Public Utilities
City of Seattle
Ray Hoffman, Director

ORDINANCE NO. APPROVED
FUND:
SCALE: AS NOTED INSPECTOR'S BOOK

HENDERSON NORTH CSO REDUCTION

JOB NO. PC C304102 R/W CO C304102
VAULT PLAN NO.
SHEET 046 OF 320

PERMITTING DATA:

WITHIN 100' ECA BUFFER
-NATIVE PLANTINGS 10,600 SF
-SEED LAWN 6,600 SF
NEARSHORE (EAST OF OHWM)
-NATIVE PLANTINGS 423 SF

NOTES:

1. SEE SHEET 051 FOR PLANTING SCHEDULE & PLANTING NOTES.
2. FOR EXISTING TREES TO REMAIN AND TREES TO BE REMOVED, SEE SHEET 017A, 017B, & 017C TYP.

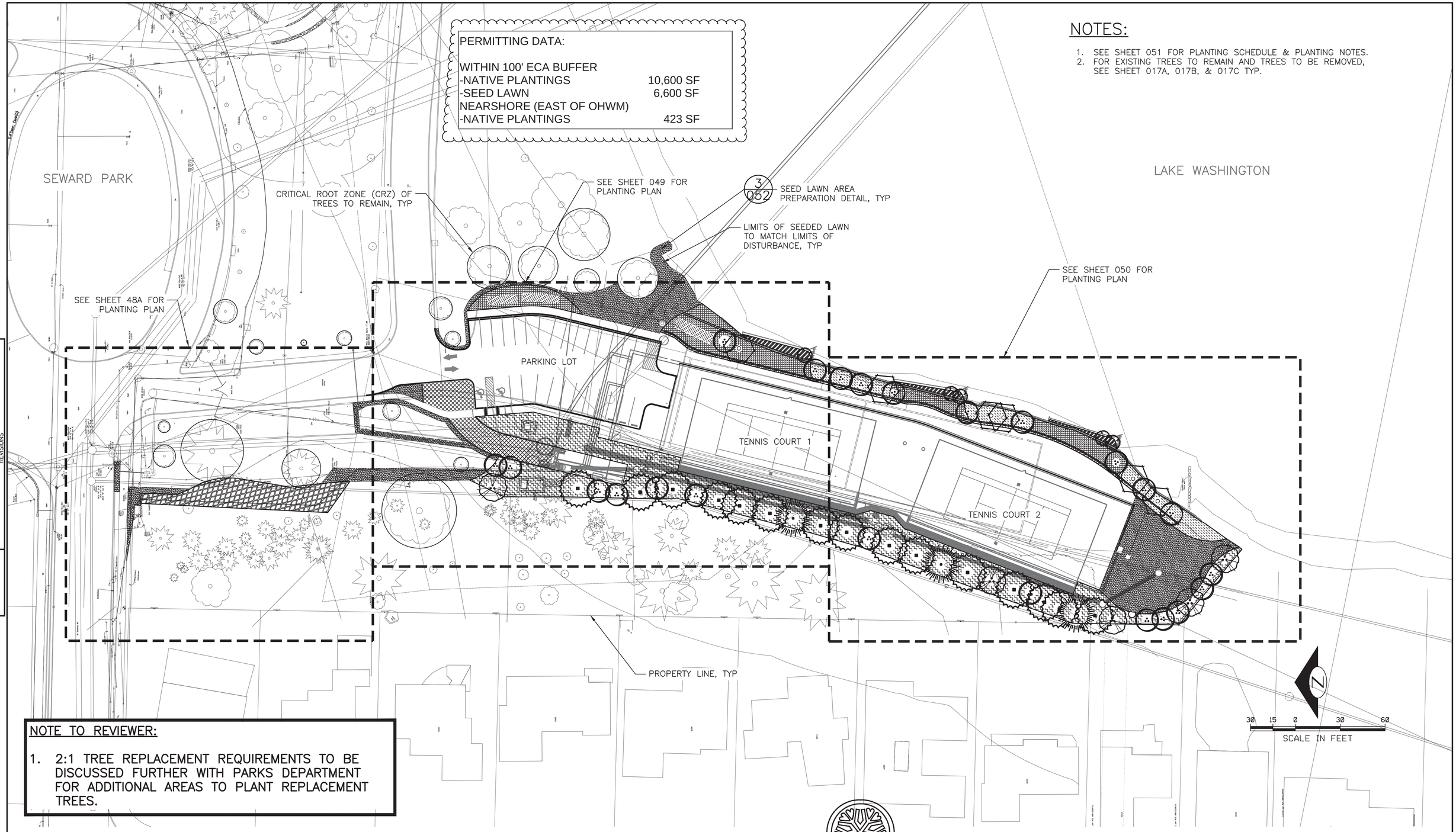

NOTE TO REVIEWER:

1. 2:1 TREE REPLACEMENT REQUIREMENTS TO BE DISCUSSED FURTHER WITH PARKS DEPARTMENT FOR ADDITIONAL AREAS TO PLANT REPLACEMENT TREES.

VAULT SERIAL NO.	DATE	MARK	NATURE REVISIONS	MADE	CHK'D	REV'D

P:\2010 projects\2010-180\basin 44 - seward park\Graphics\AutoCAD\60%\048 C304102-P-VEGE-44L001.dwg
bschneider Nov-13-13 1:27pm

MUP SUBMITTAL

CSO FACILITY 8A–PLANTING PLAN OVERVIEW

HDR Engineering, Inc.

HBB LANDSCAPE ARCHITECTURE

0 1/2 1
IF THIS BAR DOES NOT MEASURE 1" THEN DRAWING IS NOT PLOTTED TO ORIGINAL SCALE.

APPROVED FOR ADVERTISING
NANCY LOCKE
DEPARTMENT OF FINANCE & ADMINISTRATIVE SERVICES
SEATTLE, WASHINGTON 20
BY:
PURCHASING & CONTRACTING SERVICES DIRECTOR

NAME OR INITIALS AND DATE
DESIGNED A. LUOMA
CHECKED D. KOONTS
DRAWN B. SCHNEIDER
CHECKED D. KOONTS

INITIALS AND DATE
REVIEWED:
DES. CONST.
SDOT PROJ. MGR.
RECEIVED
REVISED AS BUILT

ALL WORK SHALL BE DONE IN ACCORDANCE WITH THE CITY OF SEATTLE STANDARD PLANS AND SPECIFICATIONS AND OTHER DOCUMENTS CALLED FOR IN SECTION 0-02.3 OF THE PROJECT MANUAL.

STATE OF WASHINGTON LICENSED LANDSCAPE ARCHITECT
JULIET B. VONG
LICENSE NO. 857
EXPIRES ON _____

Seattle Public Utilities
City of Seattle
Ray Hoffman, Director
ORDINANCE NO. APPROVED
FUND:
SCALE: H. 1"=30' INSPECTOR'S BOOK

HENDERSON NORTH CSO REDUCTION

JOB NO. PC C304102 R/W CO C304102
VAULT PLAN NO.
SHEET 048 OF 320

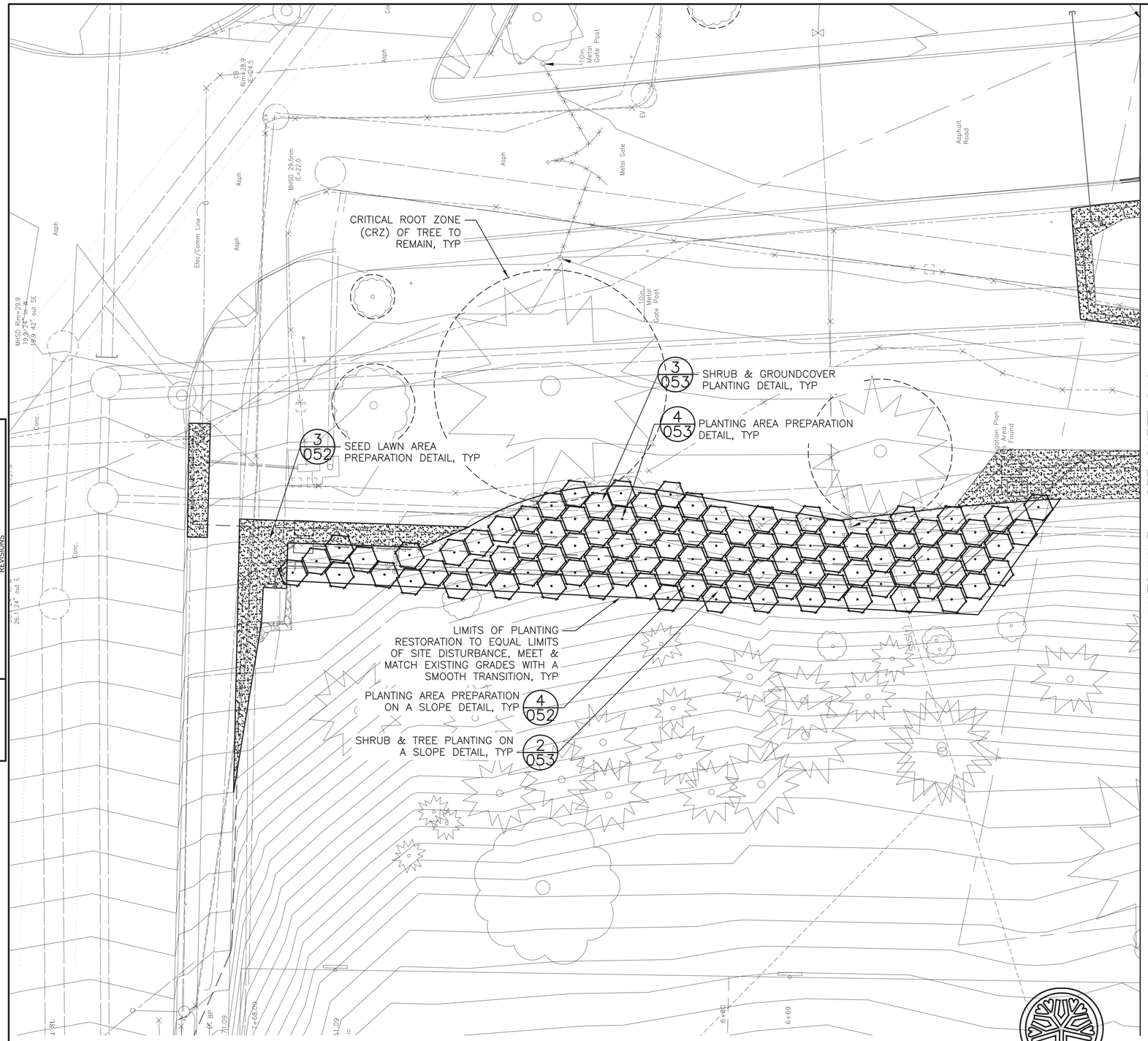

NOTES:

1. SEE SHEET 051 FOR PLANTING SCHEDULE & PLANTING NOTES.
2. FOR EXISTING TREES TO REMAIN AND TREES TO BE REMOVED, SEE SHEET 017A, TYP.
3. SEE SHEET 044 & 046 FOR SHORELINE ENHANCEMENT DETAILS.

VAULT SERIAL NO.	DATE	MARK	NATURE REVISIONS	MADE	CHK'D	REV'D

MUP SUBMITTAL

CSO FACILITY 8A–PLANTING PLAN–SHEET 1 OF 3

HDR Engineering, Inc.

HBB LANDSCAPE ARCHITECTURE

0 1/2 1
IF THIS BAR DOES NOT MEASURE 1" THEN DRAWING IS NOT PLOTTED TO ORIGINAL SCALE.

APPROVED FOR ADVERTISING
NANCY LOCKE
DEPARTMENT OF FINANCE & ADMINISTRATIVE SERVICES
SEATTLE, WASHINGTON 20
BY: PURCHASING & CONTRACTING SERVICES DIRECTOR

NAME OR INITIALS AND DATE	INITIALS AND DATE
DESIGNED A. LUOMA	REVIEWED: DES. CONST. SDOT PROJ. MGR.
CHECKED D. KOONTS	
DRAWN B. SCHNEIDER	RECEIVED
CHECKED D. KOONTS	REVISED AS BUILT

ALL WORK SHALL BE DONE IN ACCORDANCE WITH THE CITY OF SEATTLE STANDARD PLANS AND SPECIFICATIONS AND OTHER DOCUMENTS CALLED FOR IN SECTION 0-02.3 OF THE PROJECT MANUAL.

STATE OF WASHINGTON LICENSED LANDSCAPE ARCHITECT
JULIET B. VONG
LICENSE NO. 857
EXPIRES ON _____

Seattle Public Utilities
City of Seattle
Ray Hoffman, Director
ORDINANCE NO.
FUND:
SCALE: AS NOTED
APPROVED
INSPECTOR'S BOOK

HENDERSON NORTH CSO REDUCTION

JOB NO. PC C304102 R/W CO C304102
VAULT PLAN NO.
SHEET 48A OF 320

P:\2010 projects\2010-180\basin 44 – seward park\Graphics\AutoCAD\60%\048A C304102-P-VEGE-44L001B.dwg
bschneider Nov-13-13 4:46pm

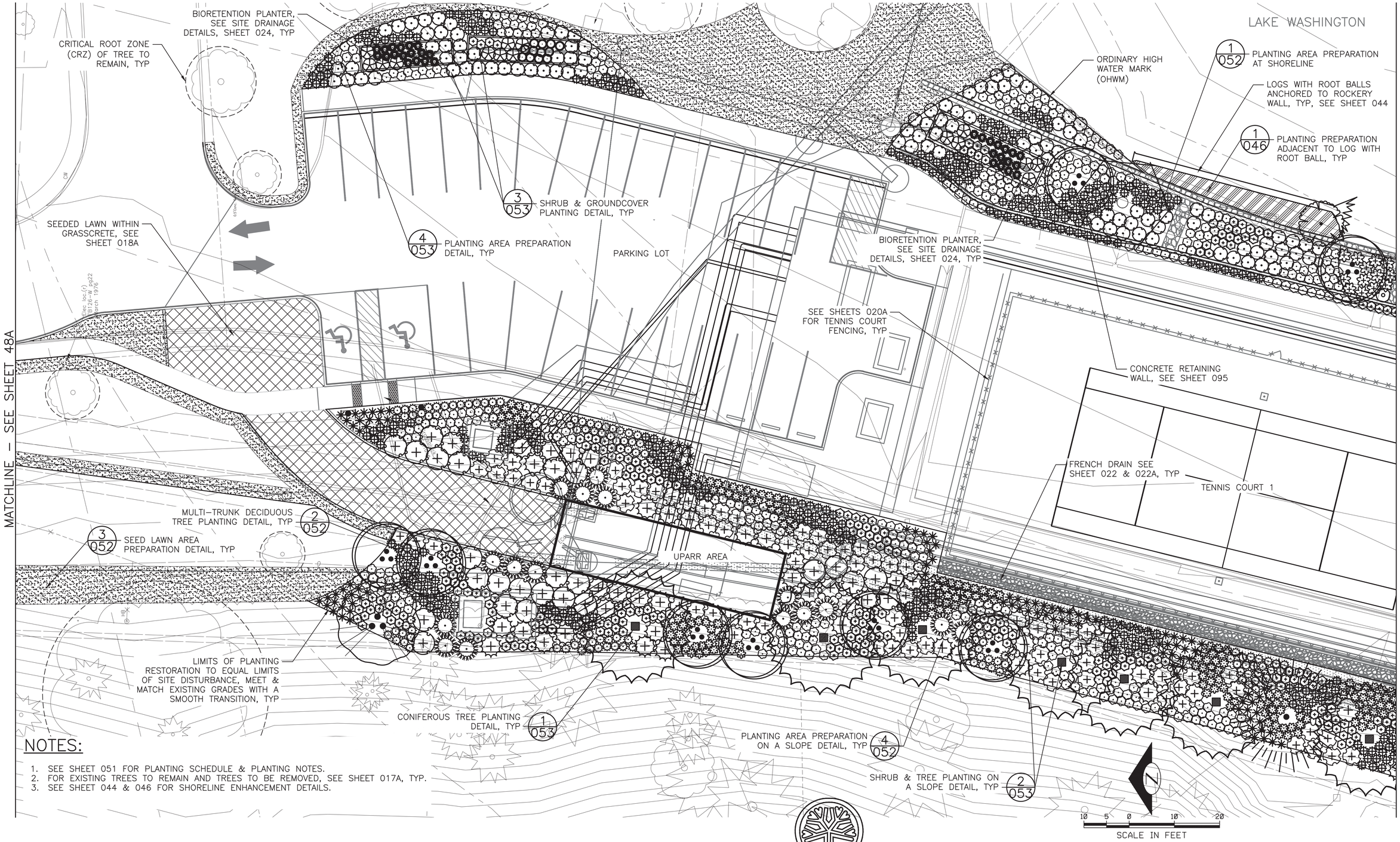

NOTES:

1. SEE SHEET 051 FOR PLANTING SCHEDULE & PLANTING NOTES.
2. FOR EXISTING TREES TO REMAIN AND TREES TO BE REMOVED, SEE SHEET 017A, TYP.
3. SEE SHEET 044 & 046 FOR SHORELINE ENHANCEMENT DETAILS.

MUP SUBMITTAL

CSO FACILITY 8A–PLANTING PLAN–SHEET 2 OF 3

VAULT SERIAL NO.	DATE	MARK	NATURE REVISIONS	MADE	CHK'D	REV'D

HDR Engineering, Inc.

HBB LANDSCAPE ARCHITECTURE

0 1/2 1 — IF THIS BAR DOES NOT MEASURE 1" THEN DRAWING IS NOT PLOTTED TO ORIGINAL SCALE.

APPROVED FOR ADVERTISING
NANCY LOCKE
DEPARTMENT OF FINANCE & ADMINISTRATIVE SERVICES
SEATTLE, WASHINGTON 20
BY: PURCHASING & CONTRACTING SERVICES DIRECTOR

NAME OR INITIALS AND DATE	INITIALS AND DATE
DESIGNED A. LUOMA	REVIEWED: DES. CONST. SDOT PROJ. MGR.
CHECKED D. KOONTS	
DRAWN B. SCHNEIDER	RECEIVED
CHECKED D. KOONTS	REVISED AS BUILT

ALL WORK SHALL BE DONE IN ACCORDANCE WITH THE CITY OF SEATTLE STANDARD PLANS AND SPECIFICATIONS AND OTHER DOCUMENTS CALLED FOR IN SECTION 0-02.3 OF THE PROJECT MANUAL.

STATE OF WASHINGTON LICENSED LANDSCAPE ARCHITECT
JULIET B. VONG
LICENSE NO. 857
EXPIRES ON _____

Seattle Public Utilities
City of Seattle
Ray Hoffman, Director
ORDINANCE NO. APPROVED
FUND:
SCALE: H. 1"=10' INSPECTOR'S BOOK

HENDERSON NORTH CSO REDUCTION

JOB NO. PC C304102 R/W CO C304102
VAULT PLAN NO.
SHEET 049 OF 320

P:\2010 projects\2010-180\basin 44 - seward park\Graphics\AutoCAD\60%\049 C304102-P-VEGE-44L002.dwg
bschneider Nov-13-13 4:42pm

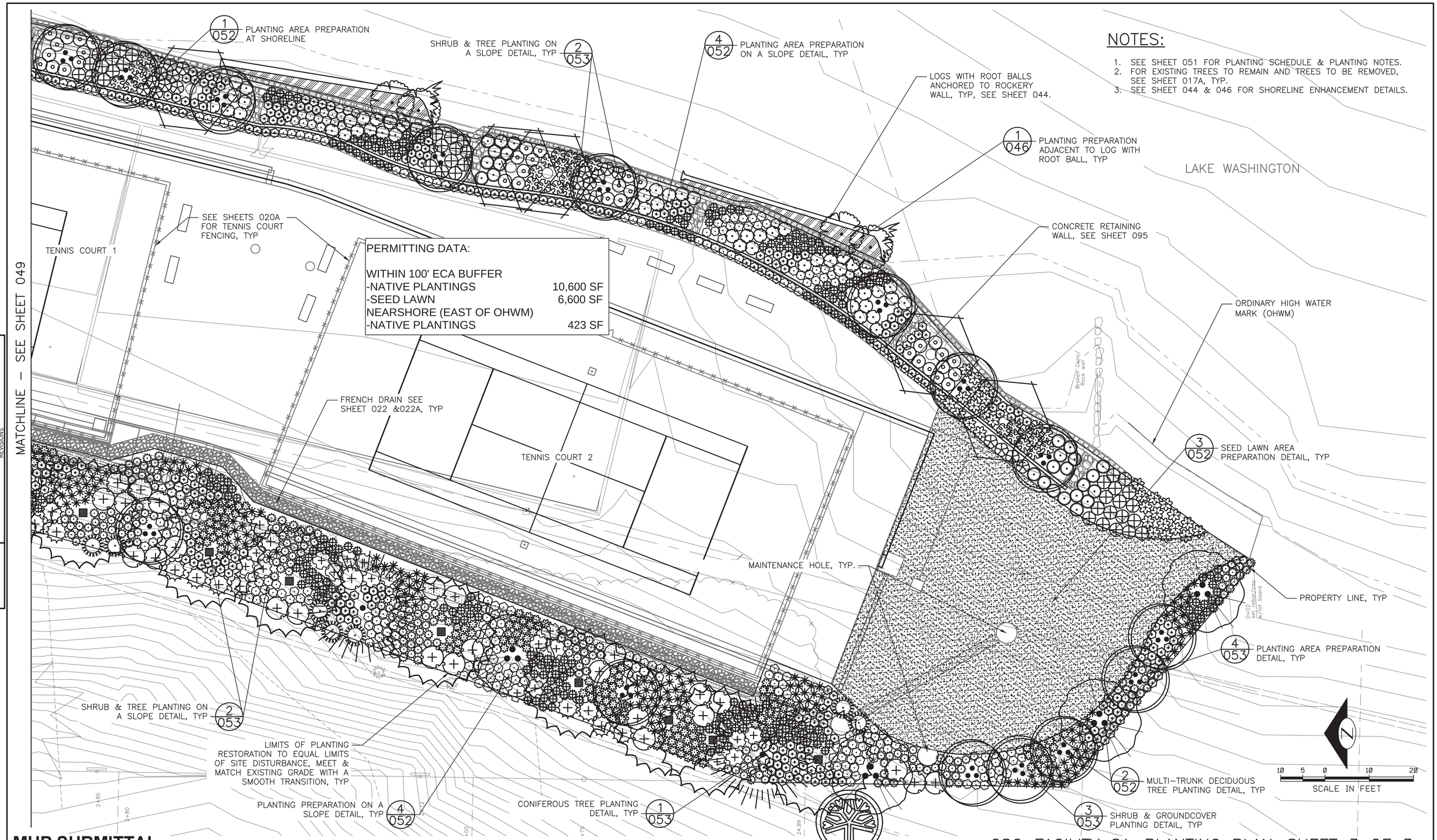

PERMITTING DATA:

WITHIN 100' ECA BUFFER	
-NATIVE PLANTINGS	10,600 SF
-SEED LAWN	6,600 SF
NEARSHORE (EAST OF OHWM)	
-NATIVE PLANTINGS	423 SF

NOTES:

1. SEE SHEET 051 FOR PLANTING SCHEDULE & PLANTING NOTES.
2. FOR EXISTING TREES TO REMAIN AND TREES TO BE REMOVED, SEE SHEET 017A, TYP.
3. SEE SHEET 044 & 046 FOR SHORELINE ENHANCEMENT DETAILS.

MUP SUBMITTAL

CSO FACILITY 8A–PLANTING PLAN–SHEET 3 OF 3

VAULT SERIAL NO.	DATE	MARK	NATURE REVISIONS	MADE	CHK'D	REV'D

P:\2010 projects\2010-180\basin 44 – seward park\Graphics\AutoCAD\60%\050 C304102-P-VEGE-44L003.dwg
beschneider Nov-13-13 4:43pm

HDR Engineering, Inc.

HBB LANDSCAPE ARCHITECTURE

0 1/2 1
IF THIS BAR DOES NOT MEASURE 1" THEN DRAWING IS NOT PLOTTED TO ORIGINAL SCALE.

APPROVED FOR ADVERTISING
NANCY LOCKE
DEPARTMENT OF FINANCE & ADMINISTRATIVE SERVICES
SEATTLE, WASHINGTON 20
BY:
PURCHASING & CONTRACTING SERVICES DIRECTOR

NAME OR INITIALS AND DATE	INITIALS AND DATE
DESIGNED A. LUOMA	REVIEWED: DES. CONST. SDOT PROJ. MGR.
CHECKED D. KOONTS	
DRAWN B. SCHNEIDER	RECEIVED
CHECKED D. KOONTS	REVISED AS BUILT

ALL WORK SHALL BE DONE IN ACCORDANCE WITH THE CITY OF SEATTLE STANDARD PLANS AND SPECIFICATIONS AND OTHER DOCUMENTS CALLED FOR IN SECTION 0-02.3 OF THE PROJECT MANUAL.

STATE OF WASHINGTON LICENSED LANDSCAPE ARCHITECT
JULIET B. VONG
LICENSE NO. 857
EXPIRES ON _____

Seattle Public Utilities
City of Seattle
Ray Hoffman, Director

ORDINANCE NO. APPROVED
FUND:
SCALE: H. 1"=10' INSPECTOR'S BOOK

HENDERSON NORTH CSO REDUCTION

JOB NO. PC C304102 R/W CO C304102
VAULT PLAN NO.
SHEET 050 OF 320

PLANTING SCHEDULE

SYM	QTY	SCIENTIFIC/COMMON NAME	SIZE/REMARKS
		DECIDUOUS TREES	
	23	ACER CIRCINATUM / VINE MAPLE	5'–6' HT; B&B; FULL & WELL BRANCHED. MULTI TRUNKED W/ MIN THREE TRUNKS.
	5	AMELANCHIER ALNIFOLIA / SERVICEBERRY	5'–6' HT; B&B; FULL & WELL BRANCHED. MULTI TRUNKED W/ MIN THREE TRUNKS.
	6	CRATAEGUS DOUGLASII / DOUGLAS HAWTHORN	2" CAL; B&B; FULL & WELL BRANCHED. SINGLE TRUNK & SYMMETRICAL BRANCHING HABIT.
		EVERGREEN TREES	
	3	THUJA PLICATA / WESTERN RED CEDAR	6'–8' HT; B&B/CONT; STRAIGHT TRUNK NOT SHEARED. SYMMETRICAL FULL & WELL BRANCHED.
	15	PSEUDOTSUGA MENZIESII / DOUGLAS FIR	6'–8' HT; B&B/CONT; STRAIGHT TRUNK NOT SHEARED. SYMMETRICAL FULL & WELL BRANCHED.

SYM	QTY	GROUPINGS	SCIENTIFIC/COMMON NAME	SIZE/REMARKS
			NEAR SHORE MIX	
	30	5–10	CAREX OBNUPTA / SLOUGH SEDGE	1 GAL CONT; FULL, & WELL ROOTED, TRIANGULAR SPACING @ 24" OC W/ 12" OFFSET FROM EDGE OF WALL OR WOODY DEBRIS. INTERMIX PLANTS
	20	3–6	JUNCUS TENUIS / SLENDER RUSH	
	12	3–6	SISYRINCHIUM CALIFORNICUM / GOLDEN EYE GRASS	
	12	3–6	ALISMA PLANTAGO–AQUATICA / COMMON WATER–PLANTAIN	
	25	5–10	SCHOENOPLECTUS TABERNAEMONTANI / SOFT–STEM BULRUSH	
	24	5–10	SCHOENOPLECTUS ACUTUS / HARD–STEM BULRUSH	
	5		SALIX SITCHENSIS / SITKA WILLOW	2 GAL CONT; FULL, WELL BRANCHED & WELL ROOTED.
			TALL SHORELINE SHRUB & GROUNDCOVER MIX	
	40		CORNUS SERICEA / RED–OSIER DOGWOOD	1 GAL CONT; FULL, WELL BRANCHED & WELL ROOTED, W/ 18" OFFSET FROM EDGE OF WALL OR PAVING.
	26		RIBES SANGUINEUM / RED FLOWERING CURRANT	
	21		SPIRAEA DOUGLASII / HARDHACK	
	36		RUBUS SPECTABILIS / SALMONBERRY	
	80		SYMPHORICARPOS ALBUS / SNOWBERRY	
	42		PHYSOCARPUS CAPITATUS / PACIFIC NINEBARK (3 LEADERS MIN)	
	30		HOLODISCUS DISCOLOR / OCEANSPRAY	
			LOW SHRUB & GROUNDCOVER MIX	
	264		ROSA GYMNOCARPA / BALDHIP ROSE	1 GAL CONT; FULL, WELL BRANCHED & WELL ROOTED, W/ 12" OFFSET FROM EDGE OF WALL, PAVING OR FRENCH DRAIN.
	253		GAULTHERIA SHALLON / SALAL	
	148		* CORNUS SERICEA 'KELSYEI' / KELSEYI DOGWOOD	
	84		SYMPHORICARPOS ALBUS / SNOWBERRY	
			OTHER	
	1,636 SF		* GRASS CRETE SEEDED LAWN	SEE SPECS
	8,249 SF		* SEEDED LAWN	SEE SPECS
	94		HYDRANGEA MACROPHYLLA / ALL SUMMER BEAUTY HYDRANGEA SHRUBS	5 GAL CONT; FULL, WELL BRANCHED, @ 5' OC

SYM	QTY	SCIENTIFIC/COMMON NAME	SIZE/REMARKS
		BIORETENTION PLANTER MIX	
	10	* CORNUS SERICEA 'KELSEYI' / KELSEYI DOGWOOD	1 GAL CONT; FULL, WELL BRANCHED & WELL ROOTED, TRIANGULAR SPACING @ 24" OC W/ 12" OFFSET FROM EDGE BIORETENTION PLANTER.
	15	SPIRAEA DOUGLASII / HARDHACK	
	32	JUNCUS EFFUSUS / COMMON RUSH	
	11	SYMPHORICARPOS ALBUS / SNOWBERRY	
	12	JUNCUS TENUIS / SLENDER RUSH	
		UPLAND SHRUBS & GROUNDCOVER MIX	
	319	POLYSTICHUM MUNITUM / SWORD FERN	1 GAL CONT; FULL, WELL BRANCHED & WELL ROOTED, TRIANGULAR SPACING @ 36" OC W/ 18" OFFSET FROM EDGE OF FRENCH DRAIN OR PAVING. NO BROWN FRONDS AND MIN 3 FRONDS ON SWORD FERN.
	358	GAULTHERIA SHALLON / SALAL	
	348	SYMPHORICARPOS ALBUS / SNOWBERRY	
	316	MAHONIA NERVOSA / LOW OREGON GRAPE	
	90	VACCINIUM OVATUM / EVERGREEN HUCKLEBERRY	
	53	PHILADELPHUS LEWISII / MOCK ORANGE	
	338	ROSA GYMNOCARPA / BALDHIP ROSE	
	274	ARCTOSTAPHYLOS UVA–URSI / KINNIKINICK	
	52	OEMLERIA CERASIFORMIS / INDIAN PLUM	
	23	ARCTOSTAPHYLOS COLUMBIANA / HAIRY MANZANITA	

PLANTING ABBREVIATIONS

#/NO.	NUMBER	EX	EXISTING
%	PERCENT	GAL	GALLON
&	AND	HT	HEIGHT
@	AT	MAX	MAXIMUM
B&B	BALLED AND BURLAPPED	MFR'S	MANUFACTURERS
℄	CENTER LINE	MIN	MINIMUM
CAL	CALIPER	NTS	NOT TO SCALE
CLR	CLEARANCE	OC	ON CENTER
CONT	CONTAINER	QTY	QUANTITY
DIA/Ø	DIAMETER	SF	SQUARE FOOT
DWG,DWGS	DRAWING(S)	SPECS	SPECIFICATIONS
ELEV	ELEVATION	STA	STATION
ENG	ENGINEER	SYM	SYMBOL
		TYP	TYPICAL
		W/	WITH

PLANTING LEGEND

1 / 051 — DETAIL IDENTIFICATION / SHEET IDENTIFICATION

PLANTING NOTES

1. ANY DISCREPANCIES W/ THE DWG'S AND/OR SPECS & SITE CONDITIONS SHALL BE BROUGHT TO THE ATTENTION OF ENG PRIOR TO PROCEEDING W/ CONSTRUCTION.
2. THE CONTRACTOR IS RESPONSIBLE FOR LOCATING UTILITIES PRIOR TO BEGINNING CONSTRUCTION
3. PLANT MATERIAL LOCATIONS SHALL BE COORDINATED W/ SPRINKLER IRRIGATION HEAD LOCATIONS TO AVOID ANY CONFLICTS.
4. LAYOUT OF PLANT MATERIAL TO BE REVIEWED WITH ENGINEER PRIOR TO CONSTRUCTION.
5. ALL PLANTS ARE NATIVE TO THE PACIFIC NORTHWEST AND FOUND IN THE PUGET SOUND REGION UNLESS OTHERWISE INDICATED WITH AN *.
6. PLANTING DRAWING IS BASED UPON BASE DRAWINGS DATED 11/13/2013. PREPARED BY:

HDR ENGINEERING, INC
500 108TH AVE NE, SUITE 1200
BELLEVUE, WA 98004–5549
(425) 450–6200

VAULT	SERIAL NO.	DATE	MARK	NATURE REVISIONS	MADE	CHK'D	REV'D

P:\2010 projects\2010-160\basin 44 - seward park\graphics\AutoCAD\60R\051 C304102-P-VEGE-44L004.dwg
bschneider Nov-20-13 11:25am

MUP SUBMITTAL

HBB LANDSCAPE ARCHITECTURE

HDR Engineering, Inc.

Ø 1/2 1
IF THIS BAR DOES NOT MEASURE 1" THEN DRAWING IS NOT PLOTTED TO ORIGINAL SCALE.

APPROVED FOR ADVERTISING
NANCY LOCKE
DEPARTMENT OF FINANCE & ADMINISTRATIVE SERVICES
SEATTLE, WASHINGTON 20
BY:
PURCHASING & CONTRACTING SERVICES DIRECTOR

NAME OR INITIALS AND DATE	INITIALS AND DATE
DESIGNED A. LUOMA	REVIEWED: DES. CONST. SDOT PROJ. MGR.
CHECKED D. KOONTS	
DRAWN B. SCHNEIDER	RECEIVED
CHECKED D. KOONTS	REVISED AS BUILT

ALL WORK SHALL BE DONE IN ACCORDANCE WITH THE CITY OF SEATTLE STANDARD PLANS AND SPECIFICATIONS AND OTHER DOCUMENTS CALLED FOR IN SECTION 0-02.3 OF THE PROJECT MANUAL.

STATE OF WASHINGTON LICENSED LANDSCAPE ARCHITECT
JULIET B. VONG
LICENSE NO. 857
EXPIRES ON _____

Seattle Public Utilities
City of Seattle
Ray Hoffman, Director
ORDINANCE NO.
FUND:
SCALE: NTS
APPROVED
INSPECTOR'S BOOK

CSO FACILITY 8A–PLANTING SCHEDULE

HENDERSON NORTH CSO REDUCTION

JOB NO. PC C304102 R/W CO C304102
VAULT PLAN NO.
SHEET 051 OF 320

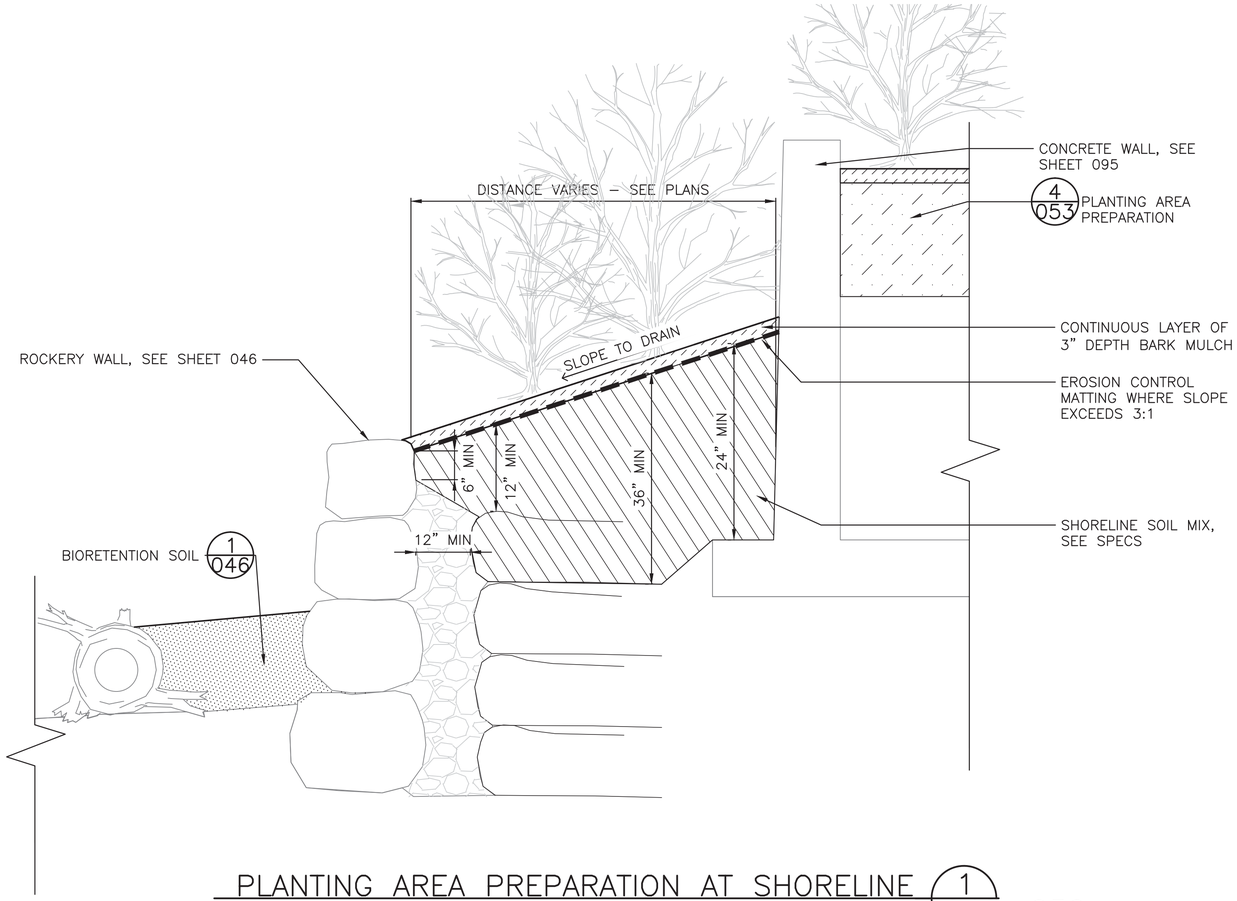

PLANTING AREA PREPARATION AT SHORELINE (1 049, 050)

SCALE: NTS

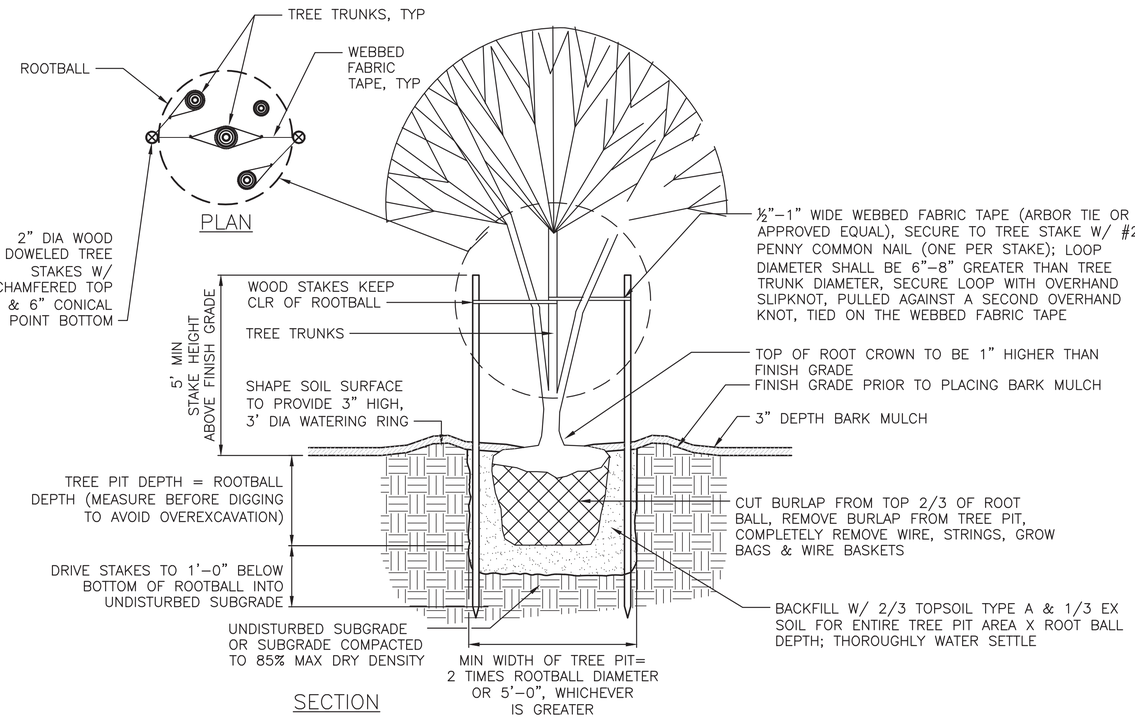

MULTI–TRUNK DECIDUOUS TREE PLANTING (2 049,050)

SCALE: NTS

NOTES:

1. SCARIFY SUBGRADE TO A 12" DEPTH PRIOR TO PLACING TOPSOIL TYPE A, EXCEPT WHERE SCARIFICATION WOULD DAMAGE EXISTING TREE ROOTS.
2. A MINIMUM OF 18" COMPACTED DEPTH OF TOPSOIL TYPE A SHALL BE INSTALLED, PER SPEC.
3. INSTALL EROSION CONTROL MATTING WHEN SLOPE EXCEEDS 3:1, PER SPEC.
4. CUT ONE SLIT PER PLANT IN EROSION CONTROL MATTING PERPENDICULAR TO SLOPE DIRECTION, ABOUT TWICE SIZE OF ROOTBALL, SPREAD MATTING OPEN, PLANT PER PLANTING DETAILS, AND FOLD MATTING TOGETHER AFTER PLANTING.
5. MULCH WITH 3 INCHES OF BARK MULCH FLUSH WITH TOP OF ADJACENT PAVING OR SIDEWALK EDGE.

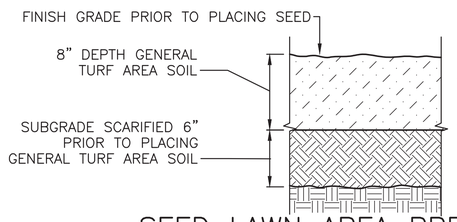

NOTES:

1. SCARIFY SUBGRADE TO A 6" DEPTH PRIOR TO PLACING GENERAL TURF AREA SOIL, EXCEPT WHERE SCARIFICATION WOULD DAMAGE EXISTING TREE ROOTS.
2. A MINIMUM OF 8" GENERAL TURF AREA SOIL SHALL BE INSTALLED, PER SPEC.
3. INSTALL SEED PER SPEC.

SEED LAWN AREA PREPARATION (3 48A,049,050)

SCALE: NTS

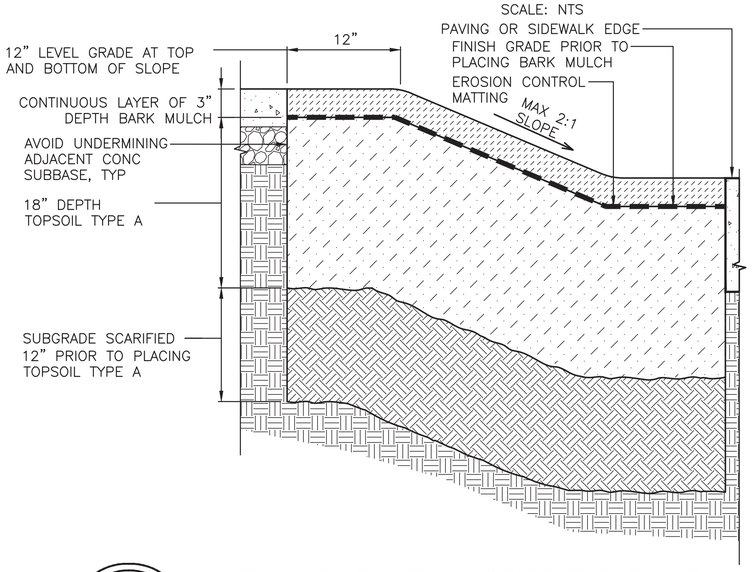

PLANTING AREA PREPARATION ON A SLOPE (4 48A,049,050)

SCALE: NTS

MUP SUBMITTAL

CSO FACILITY 8A–PLANTING DETAILS–SHEET 1 OF 2

HBB LANDSCAPE ARCHITECTURE | HDR Engineering, Inc.

Ø 1/2 1 — IF THIS BAR DOES NOT MEASURE 1" THEN DRAWING IS NOT PLOTTED TO ORIGINAL SCALE.

APPROVED FOR ADVERTISING
NANCY LOCKE
DEPARTMENT OF FINANCE & ADMINISTRATIVE SERVICES
SEATTLE, WASHINGTON 20
BY: PURCHASING & CONTRACTING SERVICES DIRECTOR

NAME OR INITIALS AND DATE	INITIALS AND DATE
DESIGNED A. LUOMA	REVIEWED: DES. CONST. SDOT PROJ. MGR.
CHECKED D. KOONTS	
DRAWN B. SCHNEIDER	RECEIVED
CHECKED D. KOONTS	REVISED AS BUILT

ALL WORK SHALL BE DONE IN ACCORDANCE WITH THE CITY OF SEATTLE STANDARD PLANS AND SPECIFICATIONS AND OTHER DOCUMENTS CALLED FOR IN SECTION 0–02.3 OF THE PROJECT MANUAL.

STATE OF WASHINGTON LICENSED LANDSCAPE ARCHITECT
JULIET B. VONG
LICENSE NO. 857
EXPIRES ON

Seattle Public Utilities — City of Seattle — Ray Hoffman, Director
ORDINANCE NO. APPROVED
FUND:
SCALE: NTS INSPECTOR'S BOOK

HENDERSON NORTH CSO REDUCTION

JOB NO. PC C304102 R/W CO C304102
VAULT PLAN NO.
SHEET 052 OF 320

VAULT SERIAL NO.	DATE	MARK	NATURE REVISIONS	MADE	CHK'D	REV'D

P:\2010 projects\2010–180\basin 44 – seward park\Graphics\AutoCAD\&0%\052 C304102–P–VEGE–441.005.dwg
bschneider Nov–13–13 4:45pm

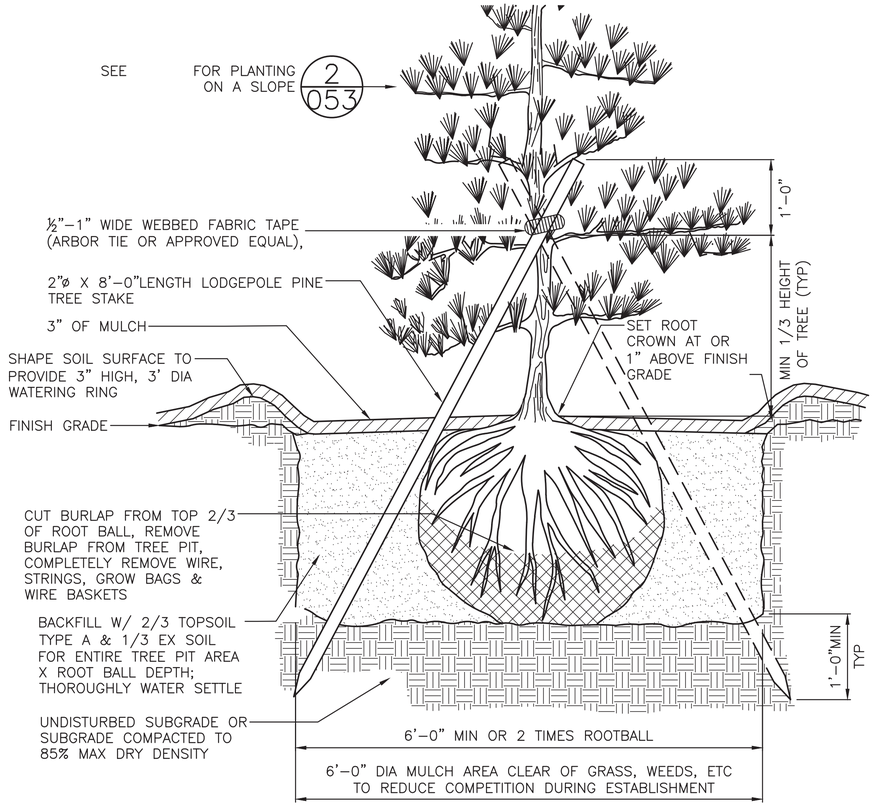

CONIFEROUS TREE PLANTING

SCALE: NTS

1
049,050

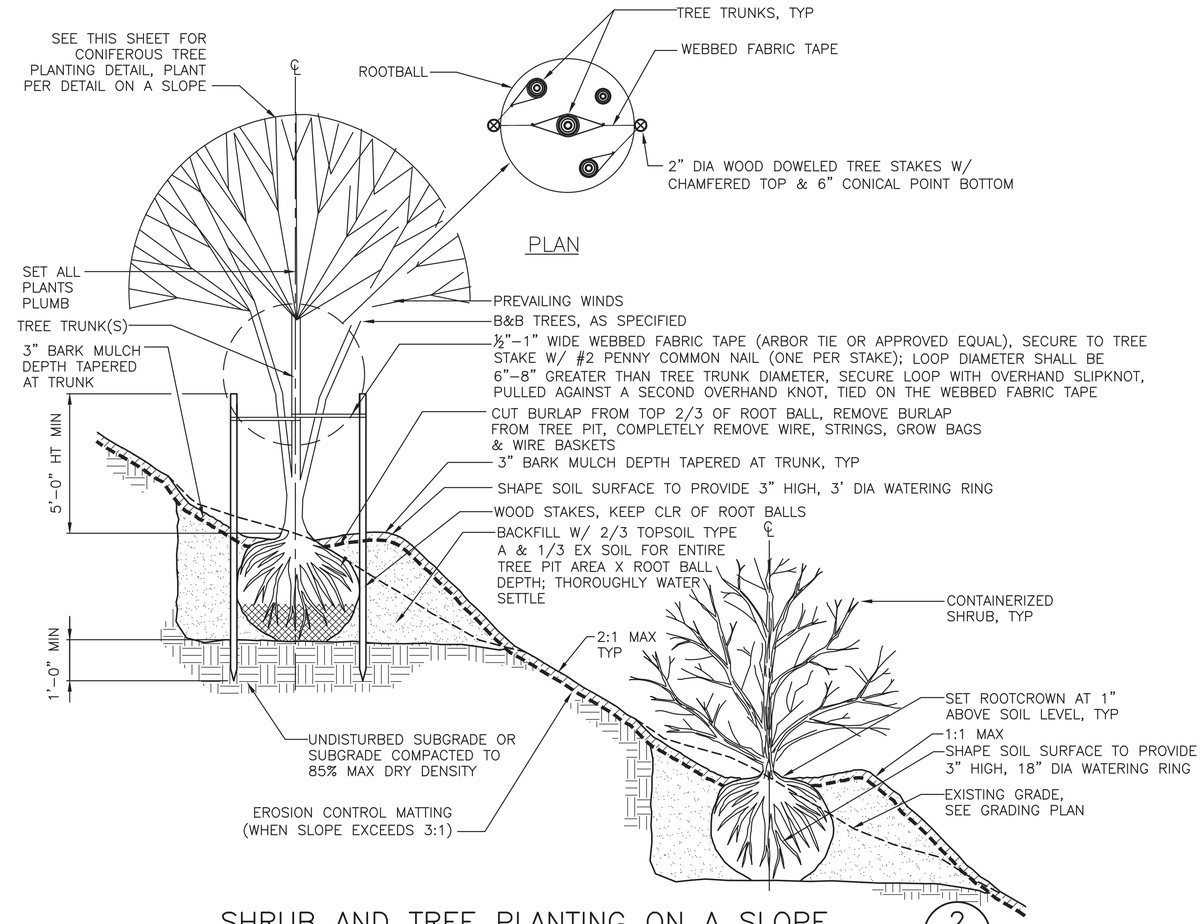

SHRUB AND TREE PLANTING ON A SLOPE

SCALE: NTS

2
48A,049,050

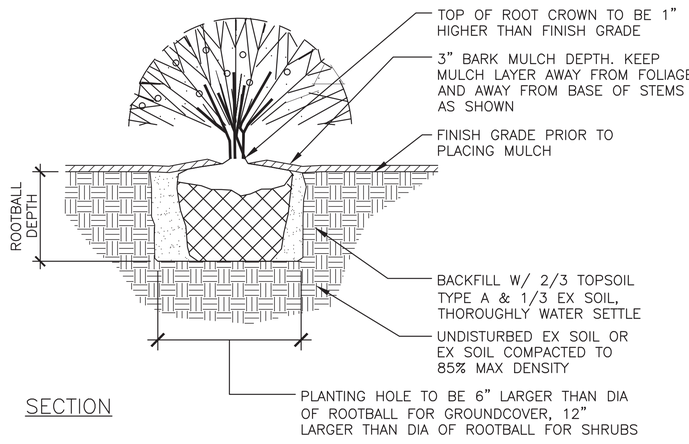

SHRUB AND GROUNDCOVER PLANTING

SCALE: NTS

3
48A,049,050

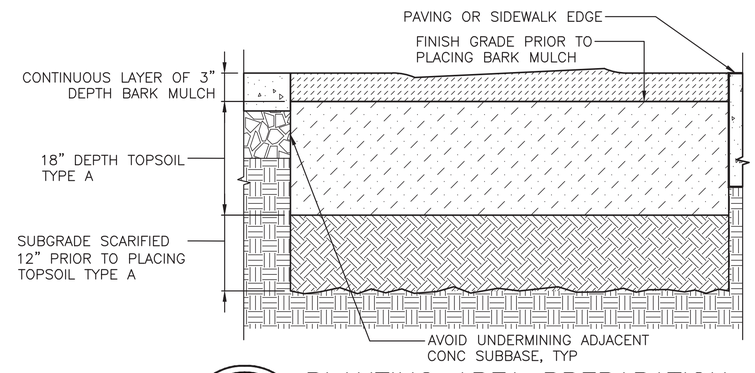

NOTES:

1. SCARIFY SUBGRADE TO A 12" DEPTH PRIOR TO PLACING TOPSOIL TYPE A, EXCEPT WHERE SCARIFICATION WOULD DAMAGE EXISTING TREE ROOTS.
2. A MINIMUM OF 18" COMPACTED DEPTH OF TOPSOIL TYPE A SHALL BE INSTALLED, PER SPEC.
3. INSTALL PLANTS PER DETAILS.
4. PROVIDE MULCH LATER AFTER PLANTING, WITH 3 INCHES OF COMPACTED BARK MULCH FLUSH WITH TOP OF ADJACENT PAVING OR SIDEWALK EDGE.

PLANTING AREA PREPARATION

SCALE: NTS

4
48A,049,050

MUP SUBMITTAL

CSO FACILITY 8A–PLANTING DETAILS–SHEET 2 OF 2

VAULT SERIAL NO.	DATE	MARK	NATURE REVISIONS	MADE	CHK'D	REV'D

P:\2010 projects\2010-180\basin 44 – seward park\Graphics\AutoCAD\60%\053 C304102-P-VEGE-44L006.dwg
bschneider Nov-13-13 1:30pm

HBB LANDSCAPE ARCHITECTURE

HDR Engineering, Inc.

0 1/2 1
IF THIS BAR DOES NOT MEASURE 1" THEN DRAWING IS NOT PLOTTED TO ORIGINAL SCALE.

APPROVED FOR ADVERTISING
NANCY LOCKE
DEPARTMENT OF FINANCE & ADMINISTRATIVE SERVICES
SEATTLE, WASHINGTON 20
BY:
PURCHASING & CONTRACTING SERVICES DIRECTOR

NAME OR INITIALS AND DATE	INITIALS AND DATE
DESIGNED A. LUOMA	REVIEWED: DES. CONST. SDOT PROJ. MGR.
CHECKED D. KOONTS	
DRAWN B. SCHNEIDER	RECEIVED
CHECKED D. KOONTS	REVISED AS BUILT

ALL WORK SHALL BE DONE IN ACCORDANCE WITH THE CITY OF SEATTLE STANDARD PLANS AND SPECIFICATIONS AND OTHER DOCUMENTS CALLED FOR IN SECTION 0-02.3 OF THE PROJECT MANUAL.

STATE OF WASHINGTON LICENSED LANDSCAPE ARCHITECT
JULIET B. VONG
LICENSE NO. 857
EXPIRES ON _____

Seattle Public Utilities
City of Seattle
Ray Hoffman, Director
ORDINANCE NO. APPROVED
FUND:
SCALE: NTS INSPECTOR'S BOOK

HENDERSON NORTH CSO REDUCTION

JOB NO. PC C304102 R/W CO C304102
VAULT PLAN NO.
SHEET 053 OF 320

NOTES:

1. SEE SHEET 057 FOR IRRIGATION SCHEDULE & IRRIGATION NOTES.

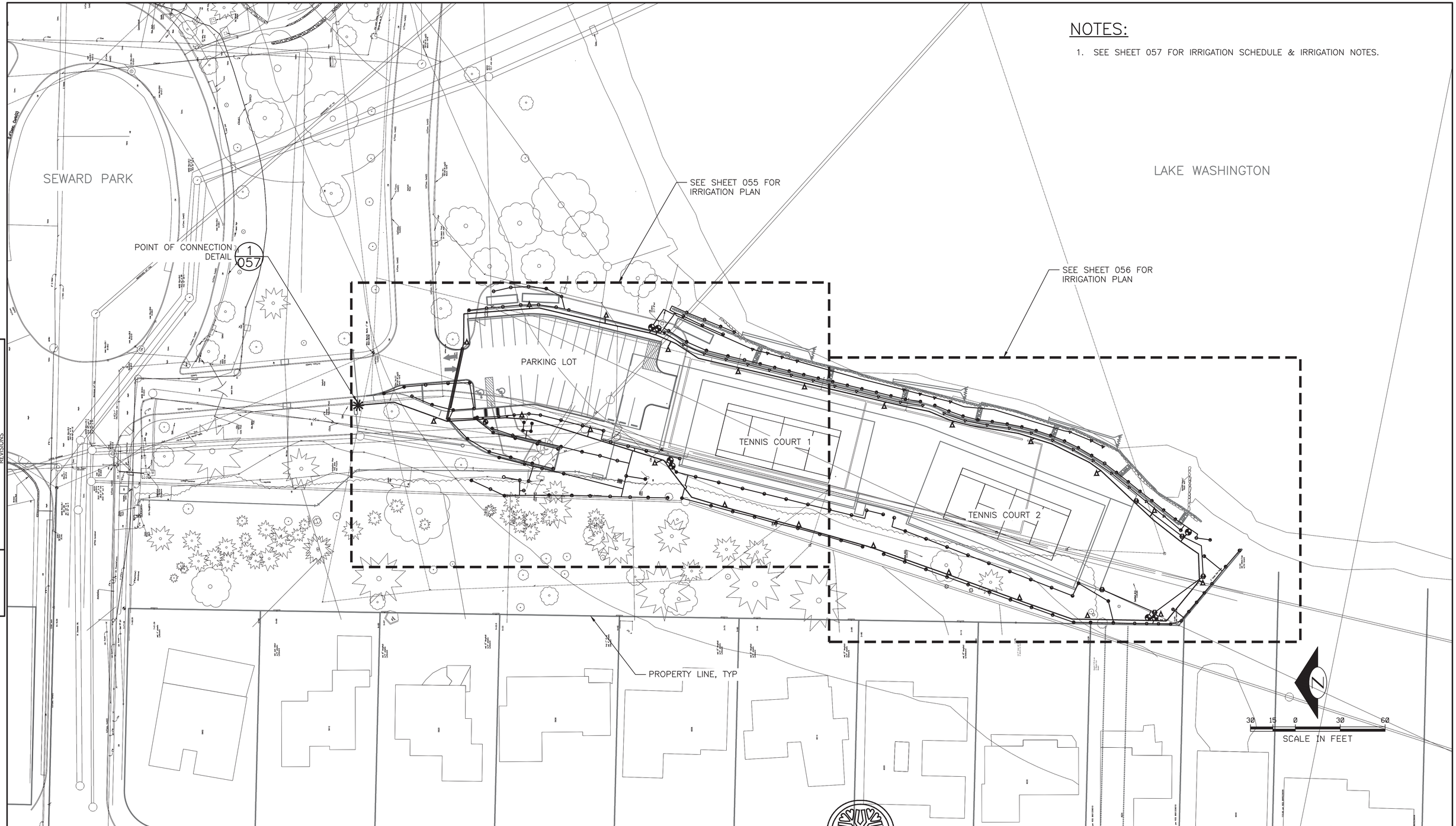

VAULT SERIAL NO.	DATE	MARK	NATURE REVISIONS	MADE	CHK'D	REV'D

P:\2010 projects\2010-180\basin 44 - seward park\graphics\AutoCAD\608\054 C304102-P-IRRG-441007.dwg
bschneider Nov-15-13 1:30pm

MUP SUBMITTAL

HDR Engineering, Inc.

HBB LANDSCAPE ARCHITECTURE

0 1/2 1
IF THIS BAR DOES NOT MEASURE 1" THEN DRAWING IS NOT PLOTTED TO ORIGINAL SCALE.

APPROVED FOR ADVERTISING
NANCY LOCKE
DEPARTMENT OF FINANCE & ADMINISTRATIVE SERVICES
SEATTLE, WASHINGTON 20
BY:
PURCHASING & CONTRACTING SERVICES DIRECTOR

NAME OR INITIALS AND DATE	INITIALS AND DATE
DESIGNED A. LUOMA	REVIEWED: DES. CONST. SDOT PROJ. MGR.
CHECKED D. KOONTS	
DRAWN B. SCHNEIDER	RECEIVED
CHECKED D. KOONTS	REVISED AS BUILT

ALL WORK SHALL BE DONE IN ACCORDANCE WITH THE CITY OF SEATTLE STANDARD PLANS AND SPECIFICATIONS AND OTHER DOCUMENTS CALLED FOR IN SECTION 0-02.3 OF THE PROJECT MANUAL.

STATE OF WASHINGTON LICENSED LANDSCAPE ARCHITECT
JULIET B. VONG
LICENSE NO. 857
EXPIRES ON _____

Seattle Public Utilities
City of Seattle
Ray Hoffman, Director
ORDINANCE NO. APPROVED
FUND:
SCALE: H. 1"=30' INSPECTOR'S BOOK

CSO FACILITY 8A–IRRIGATION PLAN OVERVIEW

HENDERSON NORTH CSO REDUCTION

JOB NO. PC C304102 R/W CO C304102
VAULT PLAN NO.
SHEET 054 OF 320

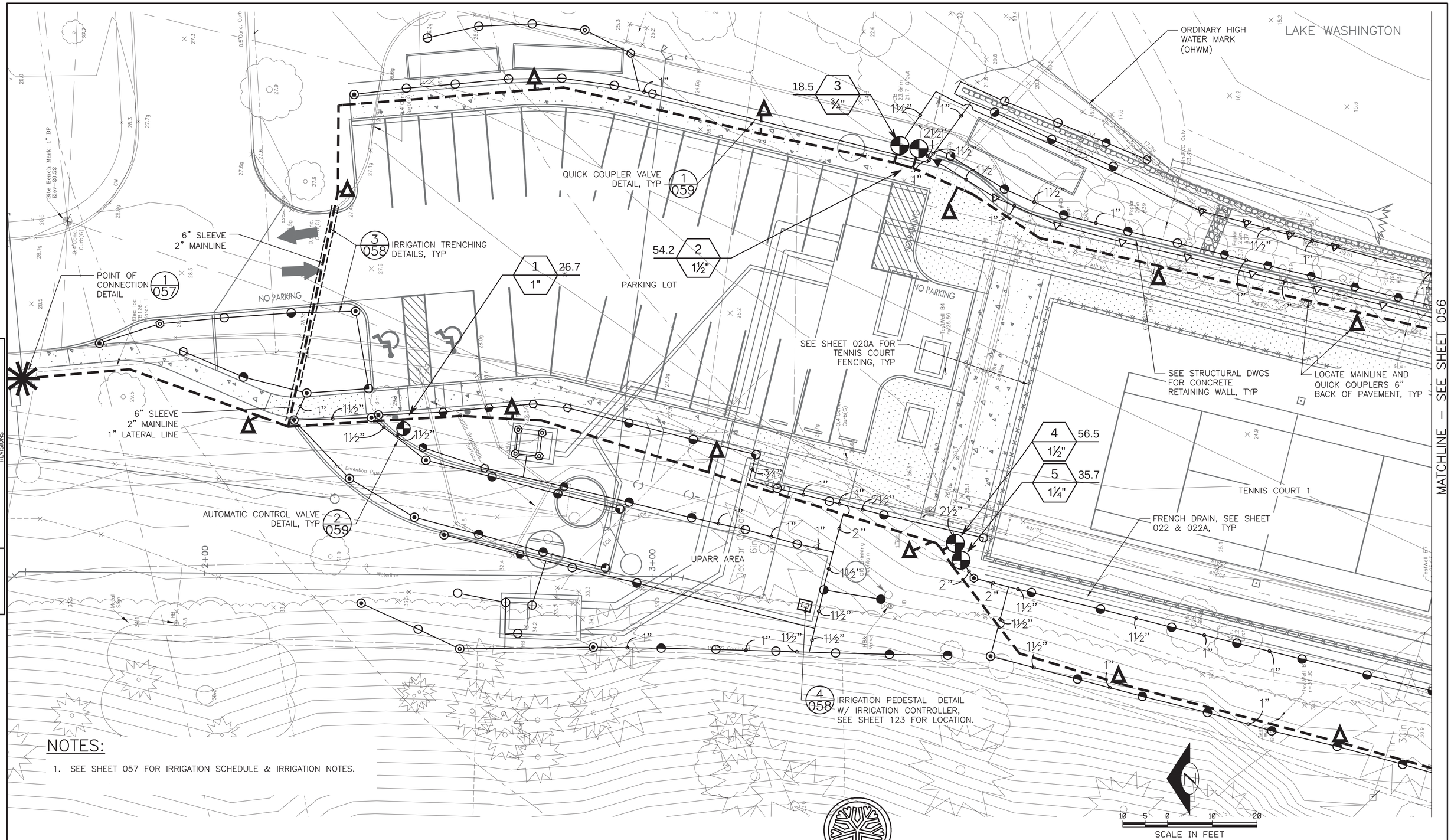

NOTES:

1. SEE SHEET 057 FOR IRRIGATION SCHEDULE & IRRIGATION NOTES.

MUP SUBMITTAL

CSO FACILITY 8A–IRRIGATION PLAN–SHEET 1 OF 2

VAULT SERIAL NO.	DATE	MARK	NATURE REVISIONS	MADE	CHK'D	REV'D

P:\2010 projects\2010-180\basin 44 - seward park\graphics\AutoCAD\60X\055 C304102-P-IRRG-44L008.dwg
bschneider Nov-13-13 1:31pm

HDR Engineering, Inc.

HBB LANDSCAPE ARCHITECTURE

0 1/2 1 — IF THIS BAR DOES NOT MEASURE 1" THEN DRAWING IS NOT PLOTTED TO ORIGINAL SCALE.

APPROVED FOR ADVERTISING
NANCY LOCKE
DEPARTMENT OF FINANCE & ADMINISTRATIVE SERVICES
SEATTLE, WASHINGTON 20
BY: PURCHASING & CONTRACTING SERVICES DIRECTOR

NAME OR INITIALS AND DATE
DESIGNED A. LUOMA
CHECKED D. KOONTS
DRAWN B. SCHNEIDER
CHECKED D. KOONTS

INITIALS AND DATE
REVIEWED: DES. CONST. SDOT PROJ. MGR.
RECEIVED
REVISED AS BUILT

ALL WORK SHALL BE DONE IN ACCORDANCE WITH THE CITY OF SEATTLE STANDARD PLANS AND SPECIFICATIONS AND OTHER DOCUMENTS CALLED FOR IN SECTION 0-02.3 OF THE PROJECT MANUAL.

STATE OF WASHINGTON LICENSED LANDSCAPE ARCHITECT
JULIET B. VONG
LICENSE NO. 857
EXPIRES ON _____

Seattle Public Utilities
City of Seattle
Ray Hoffman, Director
ORDINANCE NO.
FUND:
SCALE: H. 1"=10'
APPROVED
INSPECTOR'S BOOK

HENDERSON NORTH CSO REDUCTION

JOB NO. PC C304102 R/W CO C304102
VAULT PLAN NO.
SHEET 055 OF 320

NOTES:

1. SEE SHEET 057 FOR IRRIGATION SCHEDULE & IRRIGATION NOTES.

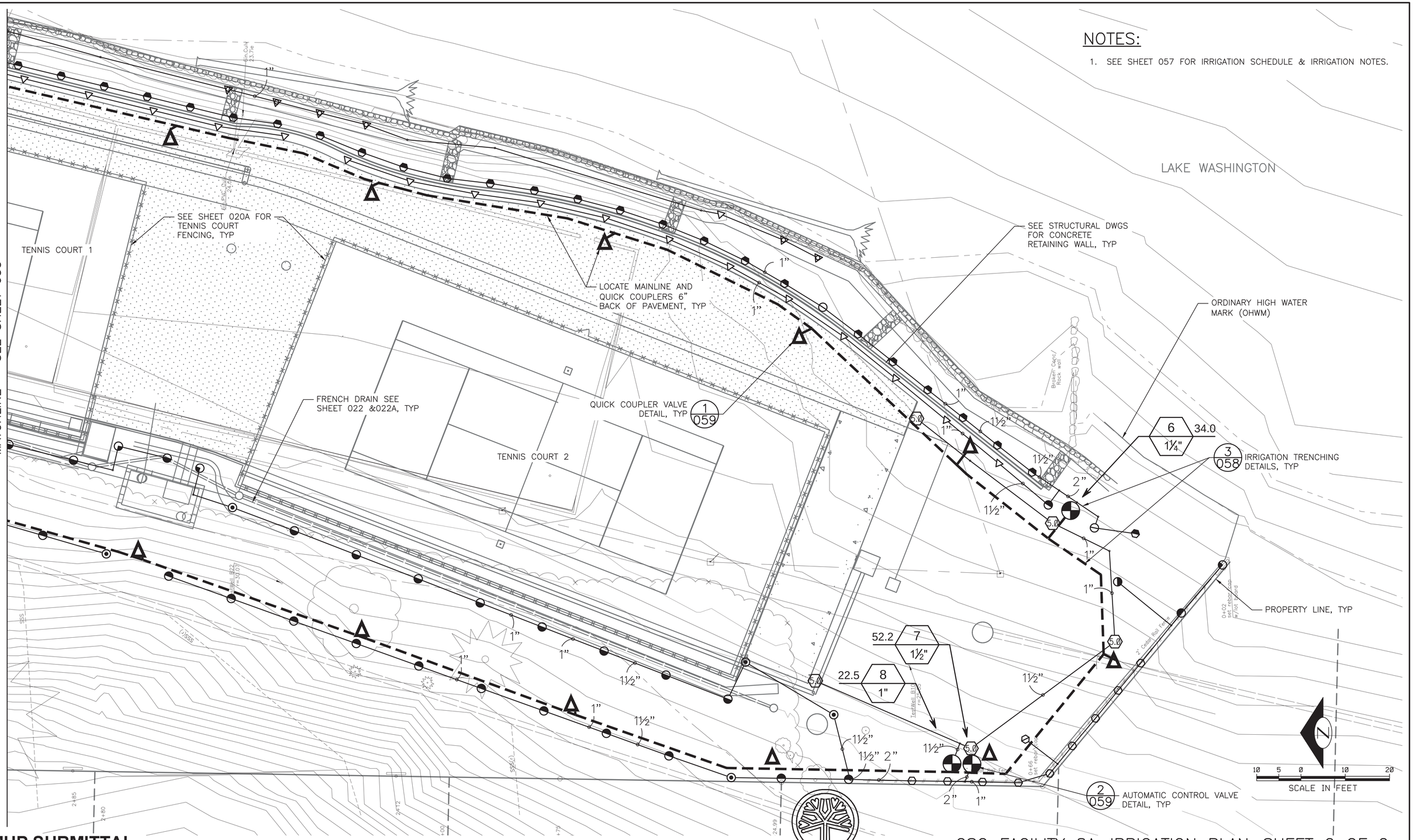

MUP SUBMITTAL

CSO FACILITY 8A–IRRIGATION PLAN–SHEET 2 OF 2

MARK	DATE	REVISIONS	MADE	CHK'D	REV'D

VAULT SERIAL NO.

HDR Engineering, Inc.

HBB LANDSCAPE ARCHITECTURE

0 1/2 1 — IF THIS BAR DOES NOT MEASURE 1" THEN DRAWING IS NOT PLOTTED TO ORIGINAL SCALE.

APPROVED FOR ADVERTISING
NANCY LOCKE
DEPARTMENT OF FINANCE & ADMINISTRATIVE SERVICES
SEATTLE, WASHINGTON 20
BY:
PURCHASING & CONTRACTING SERVICES DIRECTOR

NAME OR INITIALS AND DATE	INITIALS AND DATE
DESIGNED A. LUOMA	REVIEWED: DES. CONST. SDOT PROJ. MGR.
CHECKED D. KOONTS	
DRAWN B. SCHNEIDER	RECEIVED
CHECKED D. KOONTS	REVISED AS BUILT

ALL WORK SHALL BE DONE IN ACCORDANCE WITH THE CITY OF SEATTLE STANDARD PLANS AND SPECIFICATIONS AND OTHER DOCUMENTS CALLED FOR IN SECTION 0-02.3 OF THE PROJECT MANUAL.

STATE OF WASHINGTON LICENSED LANDSCAPE ARCHITECT
JULIET B. VONG
LICENSE NO. 857
EXPIRES ON _____

Seattle Public Utilities
City of Seattle
Ray Hoffman, Director
ORDINANCE NO. APPROVED
FUND:
SCALE: H. 1"=10' INSPECTOR'S BOOK

HENDERSON NORTH CSO REDUCTION

JOB NO. PC C304102 R/W CO C304102
VAULT PLAN NO.
SHEET 056 OF 320

P:\2010 projects\2010-180\basin 44 - seward park\Graphics\AutoCAD\60%\056 C304102-P-IRRG-44L009.dwg
bschneider Nov-13-13 1:57pm

IRRIGATION LEGEND

3/058 — PIPE SLEEVES (SCHED 40 PVC)

3/058 — LATERAL LINE (SCHED 40 PVC)

3/058 — 2 1/2" MAINLINE (SCHED 40 PVC)

CIRCUIT NO. — GPM — VALVE SIZE

2/059 — AUTOMATIC CONTROL VALVES – BUCKNER VB/HD SERIES

4/059 — 2" HAMMOND GATE VALVE

1/059 — BUCKNER QB44LRC–10 QUICK COUPLER VALVE W/ TWO (2) KEYS

3/059 — 3/4" MANUAL DRAIN VALVE: MUELLER ORISEAL MARK ii (3/4") DRAIN VALVE PROVIDE OWNER W/ TWO (2) KEYS

4/058 — RAINBIRD ESP–12LXME IRRIGATION CONTROLLER W/ PEDESTAL, SEE ELEC DWG'S FOR ELEC CONNECTION & SHEET 123

6/059, 5/059 — 1 1/2" FEBCO 850U DOUBLE CHECK VALVE ASSEMBLY W/ 1–1/2" WILKINS 600 PRESSURE REDUCING VALVE

1/054,055 — IRRIGATION POINT OF CONNECTION

IRRIGATION SCHEDULE

POP–UP SPRAY HEAD DETAIL (2/058)

SYMBOL	DESCRIPTION	RADIUS	PRESSURE	GPM + 10%
	RAINBIRD RD–12–SST–P30–F 15	4'X30'	30	1.33
	RAINBIRD RD–12–SST–P30–F 15	9'X18'	30	1.90
	RAINBIRD RD–12–S–P30–H–8–MPR	8'	30	0.57
	RAINBIRD RD–12–S–P30–H–10–MPR	10'	30	0.87
	RAINBIRD RD–12–S–P30–Q–12–MPR	12'	30	0.72
	RAINBIRD RD–12–S–P30–H–12–MPR	12'	30	1.43
	RAINBIRD RD–12–S–P30–F–12–MPR	12'	30	2.86
	RAINBIRD RD–12–S–P30–Q–15–MPR	15'	30	1.01
	RAINBIRD RD–12–S–P30–H–15–MPR	15'	30	2.04
	RAINBIRD RD–12–S–P30–F–15–MPR	15'	30	4.07
	RAINBIRD RD–12–S–P30–F ADJ	8'	30	0.32–1.29
	RAINBIRD RD–12–S–P30–F ADJ	10'	30	0.50–1.96
	RAINBIRD RD–12–S–P30–F ADJ	12'	30	0.65–2.61
	RAINBIRD RD–12–S–P30–F ADJ	15'	30	1.02–3.38

POP–UP ROTOR HEAD DETAIL (1/058)

5.0	TORO T5–P–CK	41'	35	4.95

IRRIGATION NOTES

1. LOCATE QUICK COUPLING VALVE & AUTOMATIC CONTROL VALVES IN SHRUB/ GROUNDCOVER AREAS AT POINT OF EASY ACCESS.
2. HEAD LOCATION SHALL BE ADJUSTED IN THE FIELD TO COMPLY W/ EXIST'G SITE CONDITIONS & PLANT MATERIALS.
3. CONTRACTOR SHALL COORDINATE IRRIGATION EQUIPMENT W/ PLANT MATERIAL, TO AVOID CONFLICTS, SPRAY BLOCKAGE & ANY OTHER ITEMS DEEMED APPROPRIATE BY THE ENG.
4. EXIST'G STATIC PSI AT IRRIGATION POINT OF CONNECTION IS APPROX. 120 PSI AT WATER MAIN ALONG 65TH STREET. INFORMATION PROVIDED BY ANDY SHEFFER (SEATTLE PARKS DEPARTMENT) RECEIVED ON 05/22/2013. PRIOR TO INSTALLATION OF IRRIGATION SYSTEM, CONTRACTOR SHALL FIELD VERIFY EXIST'G PSI NOTIFY ENG OF ANY DISCREPANCIES BETWEEN THE DESIGN PSI & EXIST'G PSI PRIOR TO PROCEEDING W/ WORK.
5. DRAWING IS SCHEMATIC. ACTUAL LOCATIONS MAY VARY DUE TO PLANT MATERIALS, UTILITIES OR EXIST'G CONDITIONS. CONTRACTOR IS RESPONSIBLE FOR LOCATING UTILITIES PRIOR TO BEGINNING CONSTRUCTION.
6. ALL IRRIGATION SLEEVING TO BE STAKED IN THE FIELD & LOCATED ON DIMENSIONED "AS–BUILT" DRAWING TO ALLOW FUTURE LOCATION & USE. SLEEVE LOCATIONS SHOWN ON IRRIGATION DRAWINGS ARE APPROXIMATE. SEE CIVIL DRAWINGS FOR STATIONED SLEEVE LOCATIONS.
7. AIR BLOW IRRIGATION SYSTEM THROUGH QUICK COUPLER TO WINTERIZE IRRIGATION SYSTEM.
8. SEE PLANS FOR PIPE SIZES.

IRRIGATION ABBREVIATIONS

@	AT
%	PERCENT
&	AND
CU	CUBIC
ENG	ENGINEER
EXIST'G/EXIST/EX	EXISTING
GA	GAUGE
GPM	GALLONS PER MINUTE
ID	INSIDE DIAMETER
MAX	MAXIMUM
MIN	MINIMUM
NTS	NOT TO SCALE
OD	OUTSIDE DIAMETER
POC	POINT OF CONNECTION
PVC	POLYVINYLCHLORIDE
PSI, PSI	POUNDS PER SQUARE INCH
REQD	REQUIRED
SCHED/SCH	SCHEDULE
STD	STANDARD
SQ	SQUARE
W/	WITH
YD	YARDS

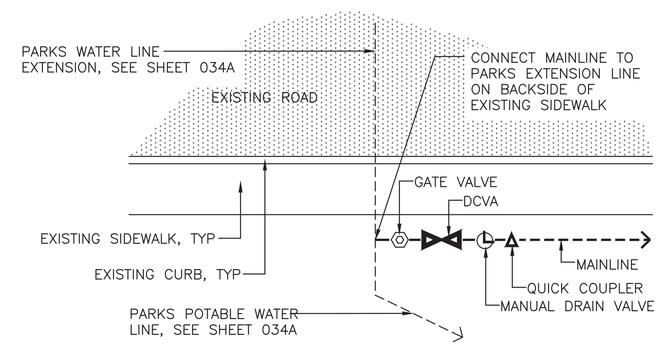

IRRIGATION POINT OF CONNECTION (POC) DETAIL (1/054,055)
SCALE: NTS

VAULT SERIAL NO.	DATE	MARK	NATURE REVISIONS	MADE	CHK'D	REV'D

P:\2010 projects\2010-182\basin 44 - seward park\Graphics\AutoCAD\60% 057 C304102-P-IRRG-44L010.dwg
bschneider Nov-13-13 1:31pm

MUP SUBMITTAL

HDR Engineering, Inc.

HBB LANDSCAPE ARCHITECTURE

0 1/2 1 — IF THIS BAR DOES NOT MEASURE 1" THEN DRAWING IS NOT PLOTTED TO ORIGINAL SCALE.

APPROVED FOR ADVERTISING
NANCY LOCKE
DEPARTMENT OF FINANCE & ADMINISTRATIVE SERVICES
SEATTLE, WASHINGTON 20
BY: PURCHASING & CONTRACTING SERVICES DIRECTOR

NAME OR INITIALS AND DATE	INITIALS AND DATE
DESIGNED A. LUOMA	REVIEWED: DES. CONST. SDOT PROJ. MGR.
CHECKED D. KOONTS	
DRAWN B. SCHNEIDER	RECEIVED
CHECKED D. KOONTS	REVISED AS BUILT

ALL WORK SHALL BE DONE IN ACCORDANCE WITH THE CITY OF SEATTLE STANDARD PLANS AND SPECIFICATIONS AND OTHER DOCUMENTS CALLED FOR IN SECTION 0–02.3 OF THE PROJECT MANUAL.

STATE OF WASHINGTON LICENSED LANDSCAPE ARCHITECT
JULIET B. VONG
LICENSE NO. 857
EXPIRES ON _____

Seattle Public Utilities
City of Seattle
Ray Hoffman, Director
ORDINANCE NO. APPROVED
FUND:
SCALE: NTS INSPECTOR'S BOOK

CSO FACILITY 8A–IRRIGATION SCHEDULE

HENDERSON NORTH CSO REDUCTION

JOB NO. PC C304102 R/W CO C304102
VAULT PLAN NO.
SHEET 057 OF 320

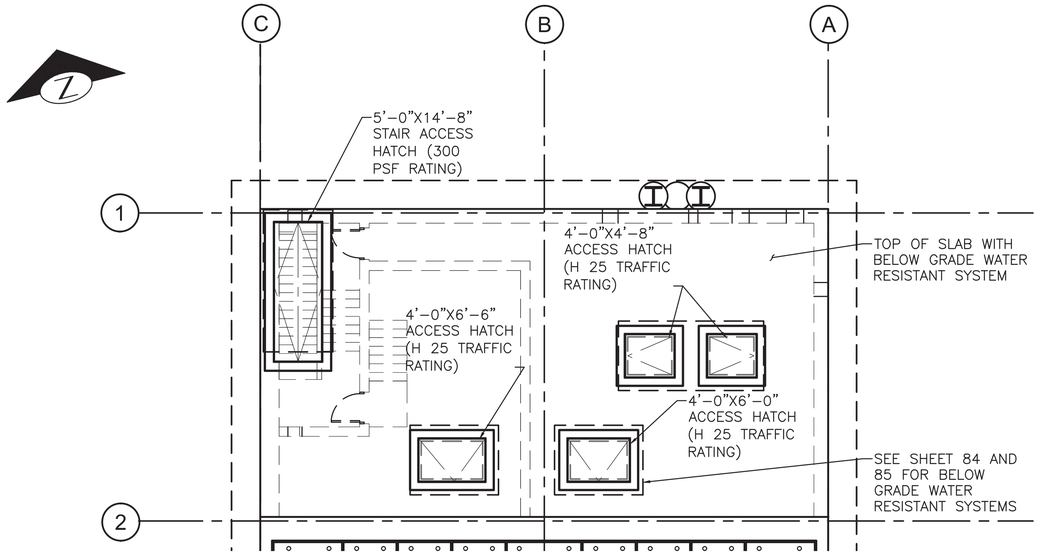

FACILITIES VAULT TOP SLAB PLAN

SCALE: 1/8"=1'–0"

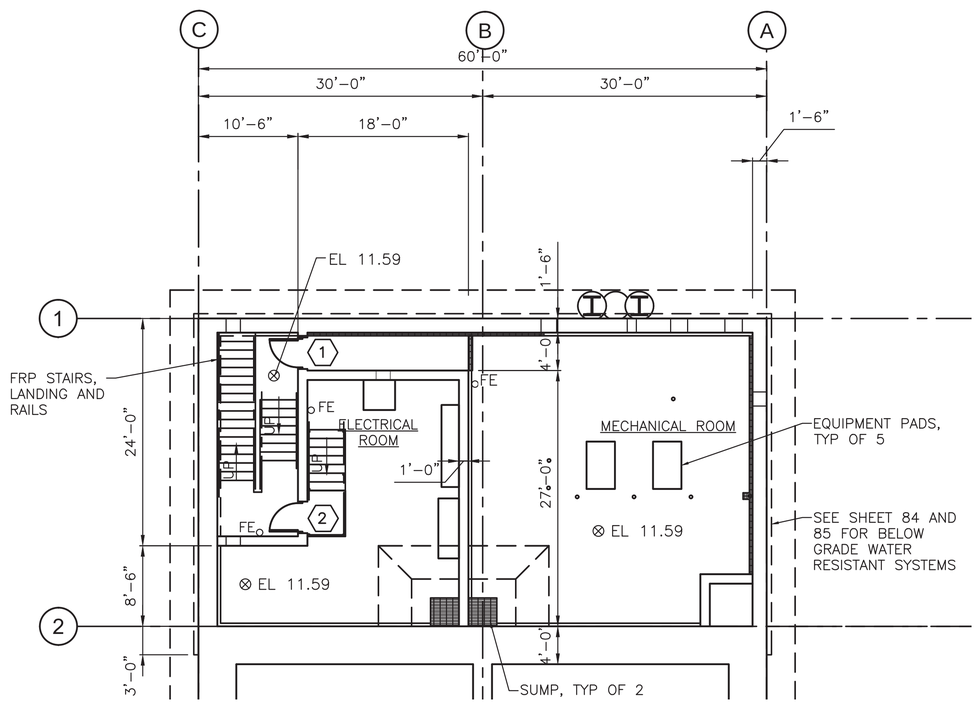

FACILITIES VAULT FLOOR PLAN

SCALE: 1/8"=1'–0"

DOOR SCHEDULE

DOOR #	1	2
DOOR WIDTH	3'–0"	3'–0"
DOOR HGT	6'–8"	6'–8"
FRAME WIDTH	3'–4"	3'–4"
FRAME HGT	6'–10"	6'–10"
HARDWARE	HW–1	HW–1
GLAZING	NONE	NONE
FIRE RATING	NONE	NONE
HEAD/JAMB DETAIL	A / 063	A / 063
SILL DETAIL	B / 063	B / 063
SIGNAGE	MECHANICAL ROOM	ELECTRICAL ROOM

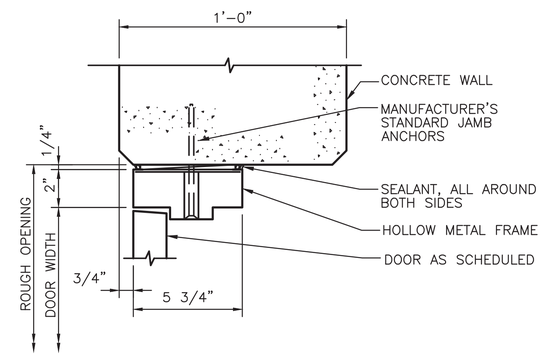

HEAD/JAMB DETAIL (A / VAR)

NTS

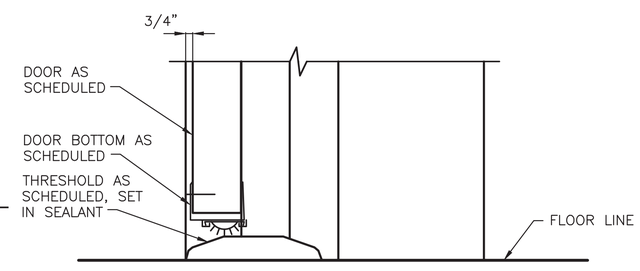

SILL DETAIL (B / VAR)

NTS

BUILDING AND FIRE CODE DATA TABLE

FACILITY NAME: CSO 8A FACILITIES VAULT	
BUILDING CODE:	2012 SBC AND SFC
OCCUPANCY GROUP:	U/UTILITY/MISCELLANEOUS
TYPE OF CONSTRUCTION:	IB NON–COMBUSTIBLE
MAXIMUM STORIES ALLOWED:	3 (SEATTLE ZONING: SF 7200)
ACTUAL NUMBER OF STORIES:	1 (ALL BELOW GRADE)
MAXIMUM HEIGHT ALLOWED:	30FT (LAND USE CODE 23.44.012A)
ACTUAL HEIGHT:	PAD FOR ACCESS HATCHES AT GRADE. FLOOR LEVEL 15'–7" BELOW FINISHED GRADE
MAXIMUM AREA ALLOWED PER FLOOR:	35,500 SQ FT (IBC TABLE 503)
ACTUAL AREA PER FLOOR	1793 SQ FT TOTAL, MECHANICAL RM. @ 1002 SF, ELECTRICAL RM. @ 566 SF AND STAIR WELL @ 225 SF
ALLOWABLE NUMBER OF OCCUPANTS	4 IN MECHANICAL RM @300 SF/OCCUPANT & 6 IN ELECTRICAL RM @ 100 SF/OCCUPANT (INDUSTRIAL SPACE) PER IBC TABLE 1004.1.1
ACTUAL NUMBER OF OCCUPANTS:	NORMALLY UNOCCUPIED, 2–3 MAXIMUM FOR SERVICE IN EACH SPACE
MEANS OF EGRESS	EXIT VIA STAIRWAY AND ACCESS HATCH
FIRE SUPRESSION	HAND HELD FIRE EXTINGUISHERS
ENERGY CODE	NOT APPLICABLE, UNHEATED SPACE

INTERIOR FINISH SCHEDULE

SURFACE/MATERIAL	FINISH	COLOR
TYPICAL WALLS – CONCRETE	PAINT SYSTEM #15	WHITE
CEILINGS – CONCRETE	PAINT SYSTEM #15	WHITE
FLOOR – CONCRETE	PAINT SYSTEM #31	LIGHT GRAY
STAIRS (FRP)	FACTORY	GRAY
HANDRAILS – (FRP)	FACTORY	GRAY
ACCESS HATCHES – ALUMINUM	FACTORY	
DUCTWORK	FACTORY	
EQUIPMENT	FACTORY	

NOTE: SEE SPECIFICATION SECTION 09 91 00 FOR PAINT SYSTEMS.

VAULT SERIAL NO.	DATE	MARK	NATURE REVISIONS	MADE	CHK'D	REV'D

MUP SUBMITTAL

CSO FACILITY 8A–ARCHITECTURAL PLAN AND CODE INFORMATION

HDR Engineering, Inc.

CH2MHILL

Ø ½ 1 IF THIS BAR DOES NOT MEASURE 1" THEN DRAWING IS NOT PLOTTED TO ORIGINAL SCALE.

APPROVED FOR ADVERTISING
NANCY LOCKE
DEPARTMENT OF FINANCE & ADMINISTRATIVE SERVICES
SEATTLE, WASHINGTON 20
BY: PURCHASING & CONTRACTING SERVICES DIRECTOR

NAME OR INITIALS AND DATE: DESIGNED, CHECKED, DRAWN, CHECKED

INITIALS AND DATE: REVIEWED: DES. CONST. SDOT PROJ. MGR.; RECEIVED; REVISED AS BUILT

ALL WORK SHALL BE DONE IN ACCORDANCE WITH THE CITY OF SEATTLE STANDARD PLANS AND SPECIFICATIONS AND OTHER DOCUMENTS CALLED FOR IN SECTION 0–02.3 OF THE PROJECT MANUAL.

9622 REGISTERED ARCHITECT MARK F. SHARP STATE OF WASHINGTON

Seattle Public Utilities — City of Seattle, Ray Hoffman, Director
ORDINANCE NO. APPROVED
FUND:
SCALE: AS NOTED INSPECTOR'S BOOK

HENDERSON NORTH CSO REDUCTION

JOB NO. PC C304102 R/W CO C304102
VAULT PLAN NO.
SHEET 063 OF 320

C:\pwworking\sea\d0863920\063 C304102–P–MISC–444001.dwg
ahukic Nov–18–13 2:00pm

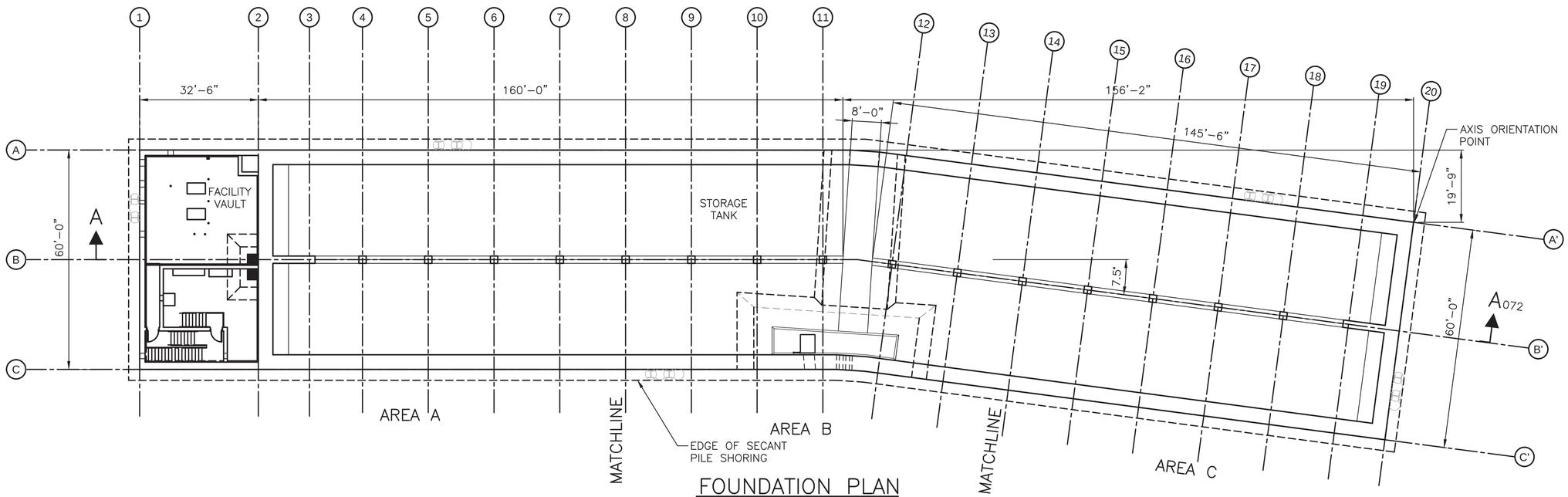

FOUNDATION PLAN

SCALE: 1/16"=1'–0"

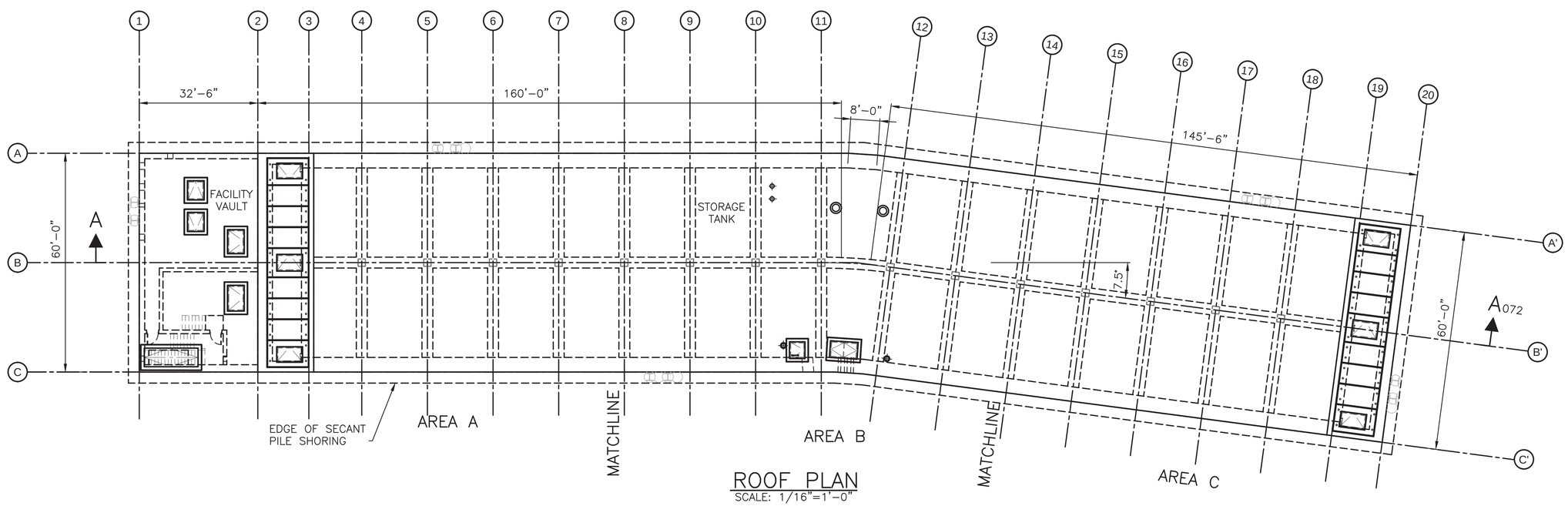

ROOF PLAN

SCALE: 1/16"=1'–0"

VAULT SERIAL NO.	DATE	MARK	NATURE REVISIONS	MADE	CHK'D	REV'D

C:\PWworking\SEA\d0863921\071 C304102-P-STRU-445008.dwg
dyang1 Nov-20-13 3:55pm

MUP SUBMITTAL

CSO FACILITY 8A–STRUCTURAL OVERALL PLANS

HDR Engineering, Inc.

CH2MHILL

0 ½ 1
IF THIS BAR DOES NOT MEASURE 1" THEN DRAWING IS NOT PLOTTED TO ORIGINAL SCALE.

APPROVED FOR ADVERTISING
NANCY LOCKE
DEPARTMENT OF FINANCE & ADMINISTRATIVE SERVICES
SEATTLE, WASHINGTON 20
BY:
PURCHASING & CONTRACTING SERVICES DIRECTOR

NAME OR INITIALS AND DATE
DESIGNED SG
CHECKED LMK
DRAWN AH
CHECKED SG

INITIALS AND DATE
REVIEWED:
DES. CONST.
SDOT PROJ. MGR.
RECEIVED
REVISED AS BUILT

ALL WORK SHALL BE DONE IN ACCORDANCE WITH THE CITY OF SEATTLE STANDARD PLANS AND SPECIFICATIONS AND OTHER DOCUMENTS CALLED FOR IN SECTION 0–02.3 OF THE PROJECT MANUAL.

LINDA M. LOMBARDI
STATE OF WASHINGTON
22864
STRUCTURAL ENGINEER
PROFESSIONAL ENGINEER

Seattle Public Utilities
City of Seattle
Ray Hoffman, Director
ORDINANCE NO.
FUND:
SCALE: 1/16"=1'–0"
APPROVED
INSPECTOR'S BOOK

HENDERSON NORTH CSO REDUCTION

JOB NO. PC C304102 R/W CO C304102
VAULT PLAN NO.
SHEET 071 OF 320

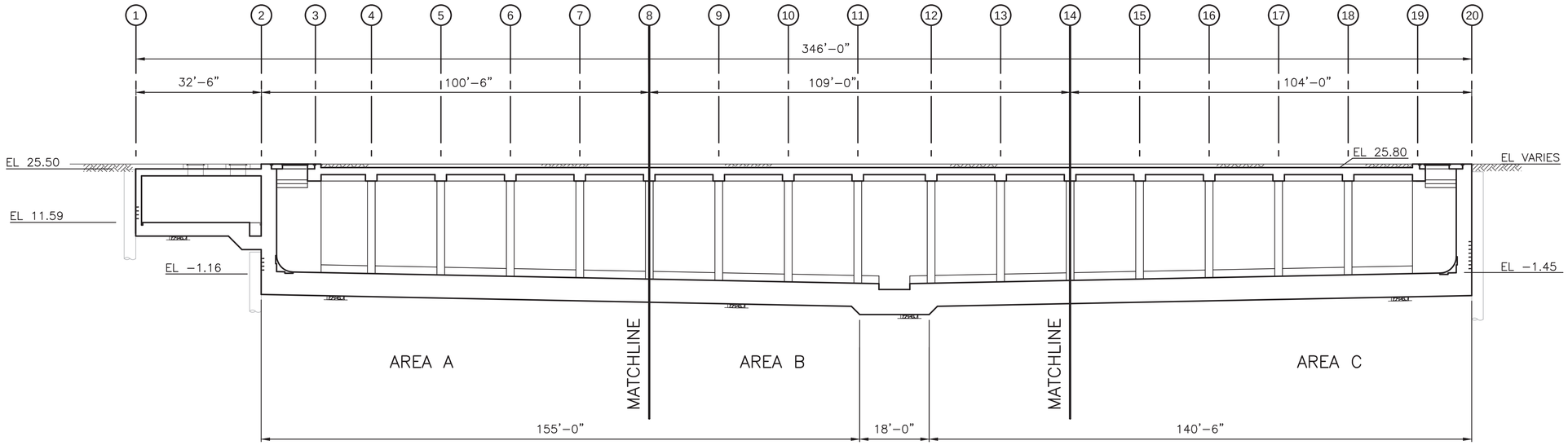

SECTION A-A 071

SCALE: 1/16"=1'-0"

VAULT SERIAL NO.	DATE	MARK	NATURE REVISIONS	MADE	CHK'D	REV'D

C:\pwworking\sea\d0883921\072 C304102-P-STRU-44S008.dwg
athulic Nov-19-13 7:50am

MUP SUBMITTAL

CSO FACILITY 8A-STRUCTURAL OVERALL SECTIONS

HDR Engineering, Inc.

CH2MHILL

0 ½ 1
IF THIS BAR DOES NOT MEASURE 1" THEN DRAWING IS NOT PLOTTED TO ORIGINAL SCALE.

APPROVED FOR ADVERTISING
NANCY LOCKE
DEPARTMENT OF FINANCE & ADMINISTRATIVE SERVICES
SEATTLE, WASHINGTON 20

BY:
PURCHASING & CONTRACTING SERVICES DIRECTOR

NAME OR INITIALS AND DATE
DESIGNED
CHECKED
DRAWN
CHECKED

INITIALS AND DATE
REVIEWED:
DES: CONST.
SDOT PROJ. MGR.
RECEIVED
REVISED AS BUILT

ALL WORK SHALL BE DONE IN ACCORDANCE WITH THE CITY OF SEATTLE STANDARD PLANS AND SPECIFICATIONS AND OTHER DOCUMENTS CALLED FOR IN SECTION 0-02.3 OF THE PROJECT MANUAL.

LIAM M. JOYCE
STATE OF WASHINGTON
22864
STRUCTURAL ENGINEER
PROFESSIONAL ENGINEER

Seattle Public Utilities

City of Seattle
Ray Hoffman, Director

ORDINANCE NO.
FUND:
SCALE: 1/16"=1'0"

APPROVED
INSPECTOR'S BOOK

HENDERSON NORTH
CSO REDUCTION

JOB NO. PC C304102
R/W
CO C304102

VAULT PLAN NO.

SHEET 072 OF 320

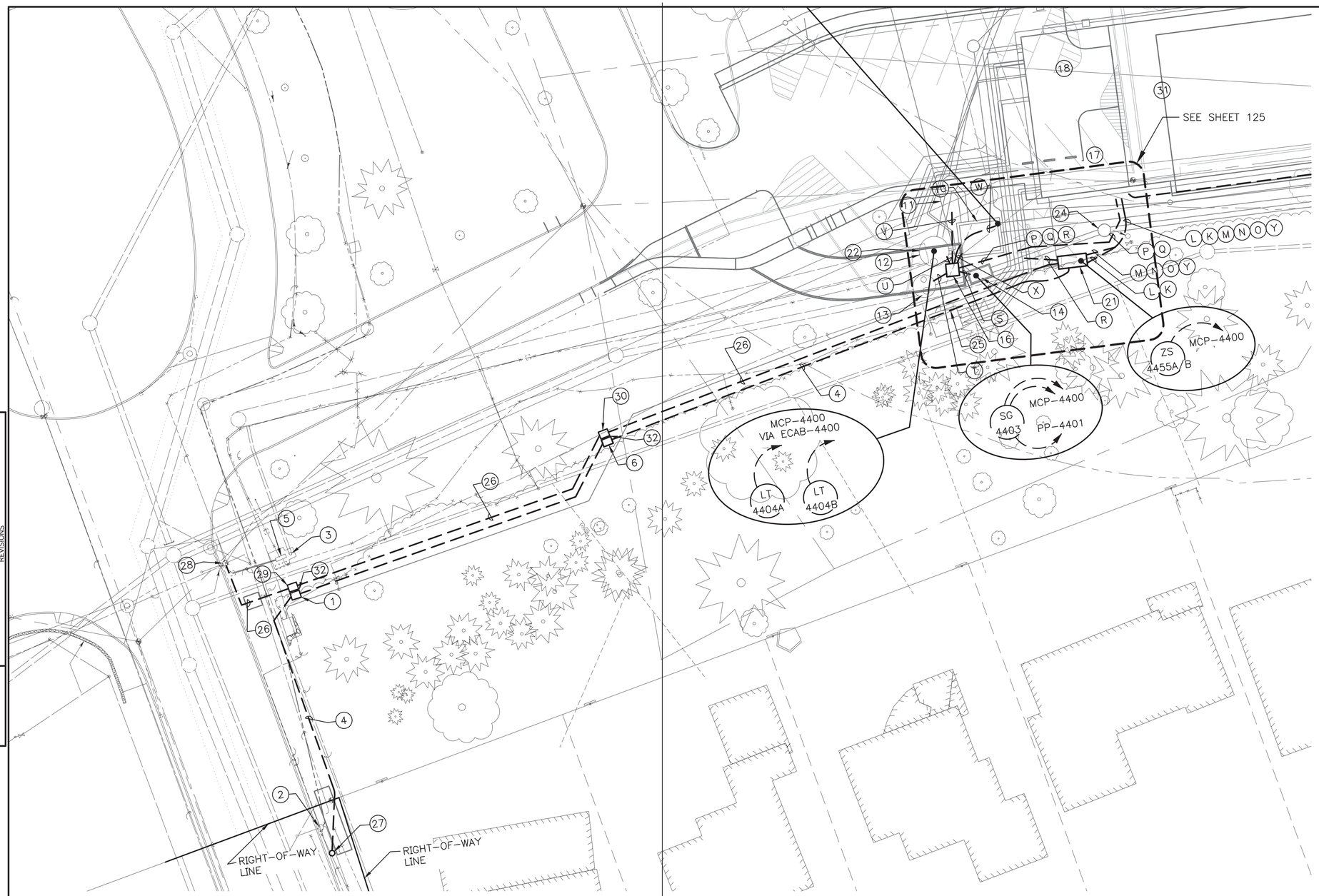

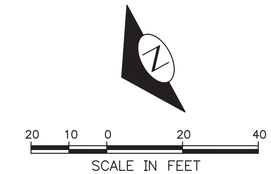

KEYNOTES:

1. HH–5 SEATTLE CITY LIGHT (SCL) TYPE 5 HANDHOLE.
2. UTILITY POLE (EXISTING). SCL POLE #: 1364616 (5903), MAINTAINED IN PLACE.
3. FAN STACK.
4. SCL SERVICE CONDUITS. PROVIDE THREE CONCRETE ENCASED, 4–INCH SCHEDULE 80 CONDUITS PER SCL STANDARDS. SEE SCL DUCTBANK DETAIL ON SHEET 141 FOR APPLICABLE STANDARDS.
5. CSO 8 FAN CONTROL CABINET.
6. HH–4.
7. SUBMERSIBLE CABLE TERMINATION VAULT.
8. HH–8.
9. NOT USED
10. INFLUENT CONTROL STRUCTURE.
11. MH–C.
12. NPDES 44A OVERFLOW STRUCTURE (MH 067–274).
13. MH 067–272.
14. MH 067–273.
15. MH–B.
16. HH–3.
17. ELECTRICAL ROOM.
18. MECHANICAL ROOM.
19. NOT USED
20. EFFLUENT CONTROL STRUCTURE.
21. ELECTRICAL AND COMMUNICATION CABINET (ECAB–4400) AND SERVICE ENTRANCE PANEL (SEP–4455). ELECTRICAL AND COMMUNICATION CABINET CONTAINS SCL METER AND CENTURY LINK DEMARK.
22. CSO 8 CONTROL STRUCTURE.
23. MH–A.
24. MH 067–261.
25. NPDES 44 OVERFLOW MONITORING CABINET. SALVAGE TO OWNER.
26. CENTURY LINK CONDUITS. PROVIDE THREE 2–INCH SCHEDULE 80 PVC CONDUITS.
27. SCL OVERHEAD TRANSFORMER BANK SERVICE POLE, 480/277V SECONDARY (NEW).
28. UTILITY POLE (EXISTING). SCL POLE #1364615 (5905). CENTURY LINK WILL USE THIS POLE TO SERVICE SITE.
29. HH–6. CENTURY LINK. TYPE 5 HANDHOLE.
30. HH–7. CENTURY LINK. TYPE 5 HANDHOLE.
31. CSO 8A STORAGE TANK.
32. PROVIDE SEPARATION BETWEEN HH OF ONE FOOT.

NOTES:

1. DUCTBANKS ARE INDICATED BY ALPHABETIC KEYNOTES (A, B, ETC). THE CONTENTS OF THE DUCTBANKS ARE DEFINED IN SPECIFICATION SECTION 26 05 43.

VAULT SERIAL NO.	DATE	MARK	NATURE REVISIONS	MADE	CHK'D	REV'D

MUP SUBMITTAL

CSO FACILITY 8A–ELECTRICAL SITE PLAN–SHEET 1 OF 2

HDR Engineering, Inc.

CH2MHILL

REVIEWED BY SPU/WATER ENGINEERING ..... 20.....
REVIEWED BY SPU/DRAINAGE ..... 20.....
APPROVED BY SDOT STREET IMPROVEMENT PERMITTING ..... 20.....

APPROVED FOR ADVERTISING
NANCY LOCKE
DEPARTMENT OF FINANCE & ADMINISTRATIVE SERVICES
SEATTLE, WASHINGTON 20
BY:
PURCHASING & CONTRACTING SERVICES DIRECTOR

NAME OR INITIALS AND DATE
DESIGNED LGK
CHECKED LDS
DRAWN PJM
CHECKED LDS

INITIALS AND DATE
REVIEWED:
DES. CONST.
SDOT PROJ. MGR.
RECEIVED
REVISED AS BUILT

ALL WORK SHALL BE DONE IN ACCORDANCE WITH THE CITY OF SEATTLE STANDARD PLANS AND SPECIFICATIONS AND OTHER DOCUMENTS CALLED FOR IN SECTION 0–02.3 OF THE PROJECT MANUAL.

LANCE G. KIRMEYER
STATE OF WASHINGTON
48334
REGISTERED PROFESSIONAL ENGINEER

Seattle Public Utilities
City of Seattle
Ray Hoffman, Director
ORDINANCE NO.
FUND:
SCALE: 1" = 20'
APPROVED
INSPECTOR'S BOOK

HENDERSON NORTH
CSO REDUCTION

JOB NO. PC C304102
R/W
CO C304102
VAULT PLAN NO.
SHEET 123 OF 320

C:\pwworking\sea\d0383923\123 C304102-P-INST-44E002.dwg
pwitherh Nov-19-13 3:11pm

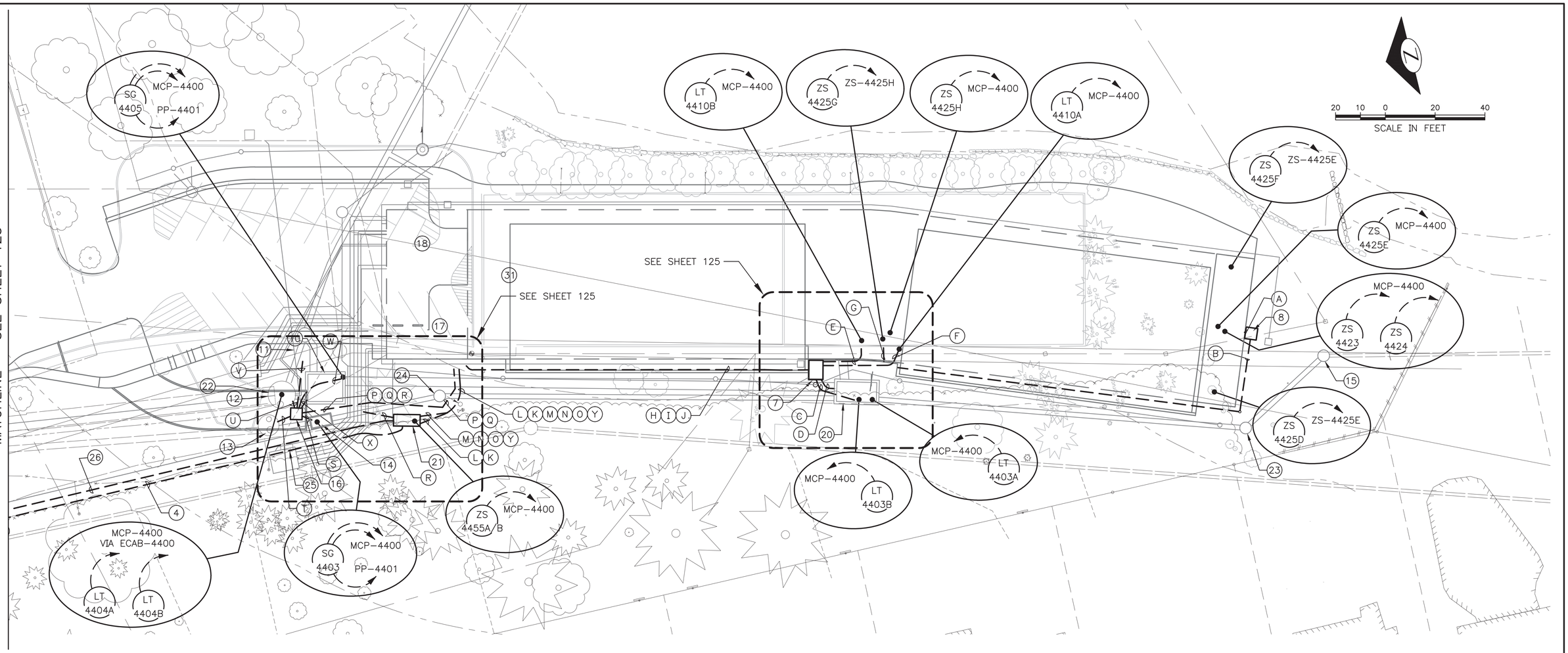

NOTES:

1. SEE SHEET 123 FOR ADDITIONAL KEYNOTES AND GENERAL NOTES.

VAULT SERIAL NO.	DATE	MARK	NATURE REVISIONS	MADE	CHK'D	REV'D

C:\pwworking\sea\d0883923\124 C304102-P-INST-44E003.dwg
pwitkem Nov-19-13 2:21pm

MUP SUBMITTAL

HDR Engineering, Inc.

0 ½ 1
IF THIS BAR DOES NOT MEASURE 1" THEN DRAWING IS NOT PLOTTED TO ORIGINAL SCALE.

APPROVED FOR ADVERTISING
NANCY LOCKE
DEPARTMENT OF FINANCE & ADMINISTRATIVE SERVICES
SEATTLE, WASHINGTON 20
BY:
PURCHASING & CONTRACTING SERVICES DIRECTOR

NAME OR INITIALS AND DATE	INITIALS AND DATE
DESIGNED LGK	REVIEWED: DES. CONST. SDOT PROJ. MGR.
CHECKED LDS	
DRAWN PJM	RECEIVED
CHECKED LDS	REVISED AS BUILT

ALL WORK SHALL BE DONE IN ACCORDANCE WITH THE CITY OF SEATTLE STANDARD PLANS AND SPECIFICATIONS AND OTHER DOCUMENTS CALLED FOR IN SECTION 0-02.3 OF THE PROJECT MANUAL.

LANCE G. KIRMEYER
STATE OF WASHINGTON
48334
REGISTERED PROFESSIONAL ENGINEER

CSO FACILITY 8A–ELECTRICAL SITE PLAN–SHEET 2 OF 2

Seattle Public Utilities
City of Seattle
Ray Hoffman, Director
ORDINANCE NO. APPROVED
FUND:
SCALE: 1" = 20' INSPECTOR'S BOOK

HENDERSON NORTH CSO REDUCTION

JOB NO. PC C304102 R/W CO C304102
VAULT PLAN NO.
SHEET 124 OF 320

NOTES:

1. PROVIDE SPACE HEATER IN EACH VERTICAL SECTION OF MCC TO PREVENT CONDENSATION.
2. INSTALL VANDAL PROOF METER VIEWING WINDOW ON CABINET FRONT DOOR IN ALIGNMENT WITH SCL METER.
3. SCL METER AND METER BASE WITH BYPASS SOCKET PROVISION.
4. NETWORK INTERFACE UNIT (NIU).
5. INSTRUMENT TERMINATION AREA.
6. PROVIDE POWER FOR HEATER, LIGHT AND RECEPTACLE FROM LP–4455.

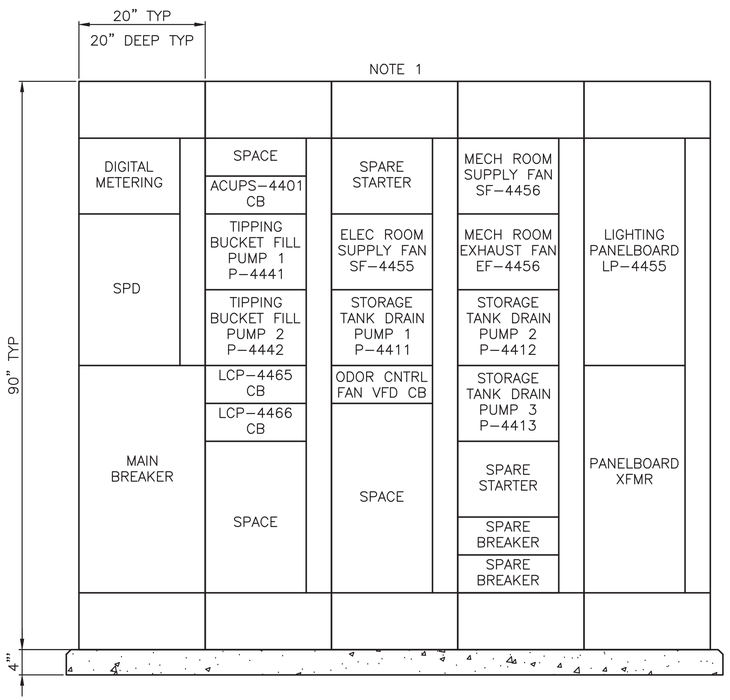

MCC–4455 FRONT VIEW

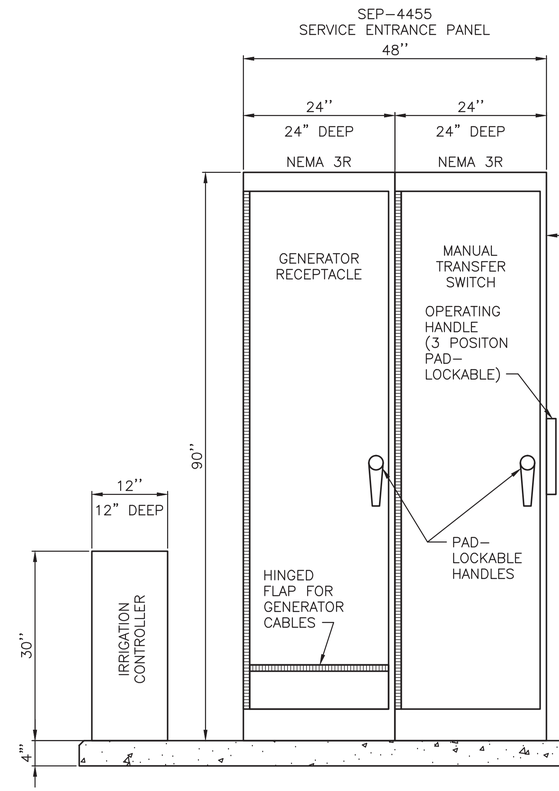

SEP–4455 FRONT VIEW

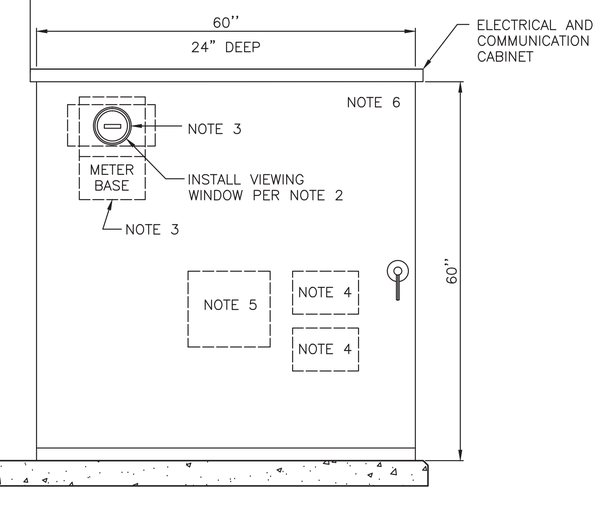

ECAB–4400 FRONT VIEW

MOTOR CONTROL CENTER ELEVATION

NTS

SERVICE ENTRANCE PANEL AND ELECTRICAL AND COMMUNICATION CABINET ELEVATION

NTS

MUP SUBMITTAL

CSO FACILITY 8A–ELECTRICAL EQUIPMENT ELEVATIONS

HDR Engineering, Inc.

0 ½ 1
IF THIS BAR DOES NOT MEASURE 1" THEN DRAWING IS NOT PLOTTED TO ORIGINAL SCALE.

APPROVED FOR ADVERTISING
NANCY LOCKE
DEPARTMENT OF FINANCE & ADMINISTRATIVE SERVICES
SEATTLE, WASHINGTON 20
BY: PURCHASING & CONTRACTING SERVICES DIRECTOR

NAME OR INITIALS AND DATE
DESIGNED LGK
CHECKED LDS
DRAWN PJM
CHECKED LDS

INITIALS AND DATE
REVIEWED:
DES. CONST.
SDOT PROJ. MGR.
RECEIVED
REVISED AS BUILT

ALL WORK SHALL BE DONE IN ACCORDANCE WITH THE CITY OF SEATTLE STANDARD PLANS AND SPECIFICATIONS AND OTHER DOCUMENTS CALLED FOR IN SECTION 0–02.3 OF THE PROJECT MANUAL.

LANCE G. KIRMEYER STATE OF WASHINGTON 48334 REGISTERED PROFESSIONAL ENGINEER

Seattle Public Utilities
City of Seattle
Ray Hoffman, Director
ORDINANCE NO.
FUND:
SCALE: NOTED
APPROVED
INSPECTOR'S BOOK

HENDERSON NORTH CSO REDUCTION

JOB NO. PC C304102 R/W CO C304102
VAULT PLAN NO.
SHEET 133 OF 320

VAULT SERIAL NO.	DATE	MARK	NATURE REVISIONS	MADE	CHK'D	REV'D

C:\pwworking\sea\d0883923\133 C304102–P–INST–44E012.dwg
bdefrees Nov–19–13 10:31am

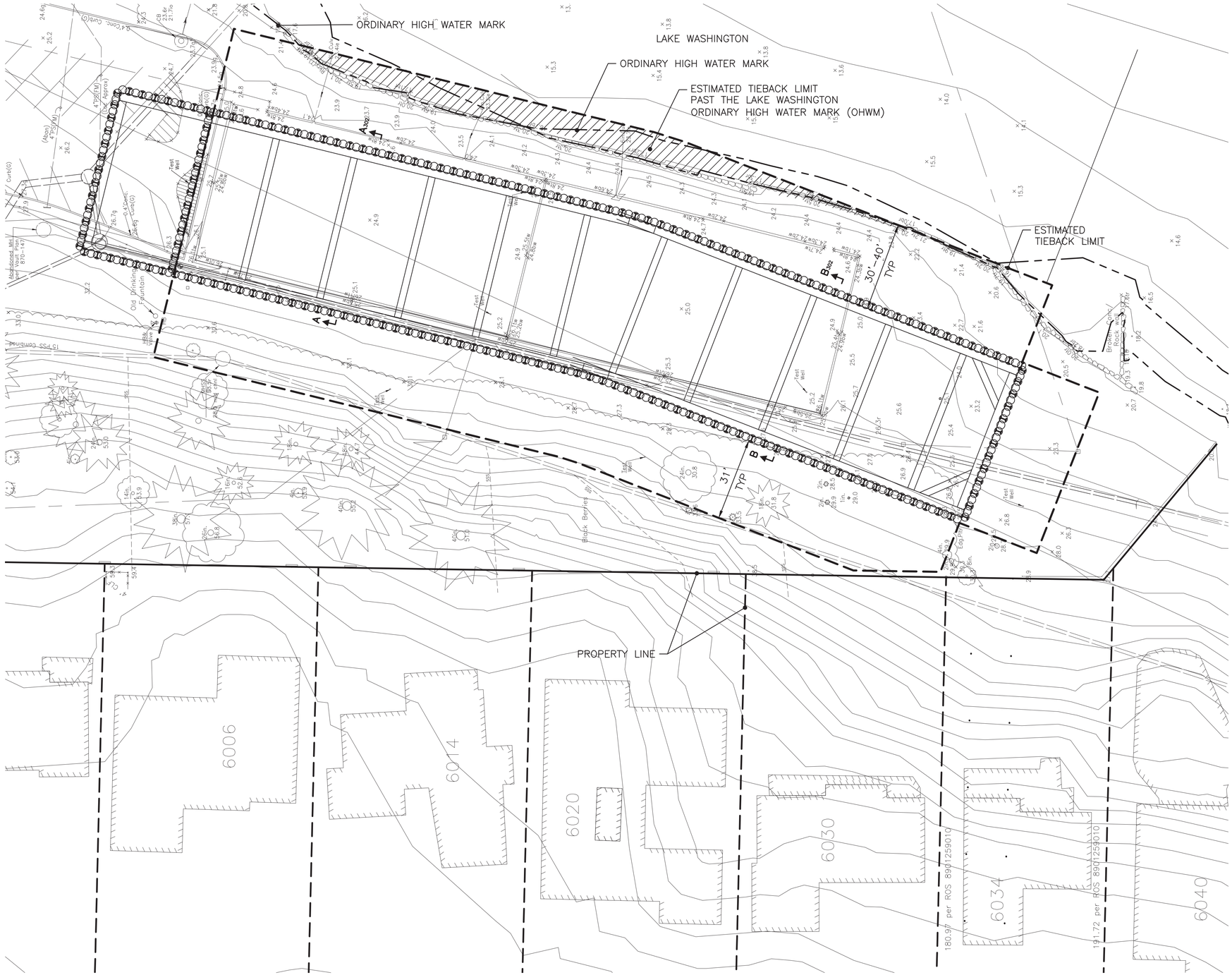

VAULT SERIAL NO.	DATE	MARK	NATURE	MADE	CHK'D	REV'D
			REVISIONS			

C:\pwworking\sea\d1024950\TIEBACK-AREA.dwg
pwitkem Aug-28-13 3:58pm

MUP SUBMITTAL

CSO FACILITY 8A-SHORING SITE PLAN

HDR Engineering, Inc.

CIVILTECH engineering

0 10' 20'
IF THIS BAR DOES NOT MEASURE 1" THEN DRAWING IS NOT PLOTTED TO ORIGINAL SCALE.

APPROVED FOR ADVERTISING
NANCY LOCKE
DEPARTMENT OF FINANCE & ADMINISTRATIVE SERVICES
SEATTLE, WASHINGTON 20

BY:
PURCHASING & CONTRACTING SERVICES DIRECTOR

NAME OR INITIALS AND DATE	INITIALS AND DATE
DESIGNED	REVIEWED:
CHECKED	DES. CONST.
	SDOT PROJ. MGR.
DRAWN	RECEIVED
CHECKED	REVISED AS BUILT

ALL WORK SHALL BE DONE IN ACCORDANCE WITH THE CITY OF SEATTLE STANDARD PLANS AND SPECIFICATIONS AND OTHER DOCUMENTS CALLED FOR IN SECTION 0-02.3 OF THE PROJECT MANUAL.

ENGINEER NAME
STATE OF WASHINGTON
REGISTERED
PROFESSIONAL ENGINEER

Seattle Public Utilities

City of Seattle
Ray Hoffman, Director

ORDINANCE NO. APPROVED
FUND:
SCALE: H. 1"=20', V. 1"=20' INSPECTOR'S BOOK

HENDERSON NORTH CSO REDUCTION

JOB NO. PC C304102 R/W CO C304102
VAULT PLAN NO.
SHEET 302 OF 320

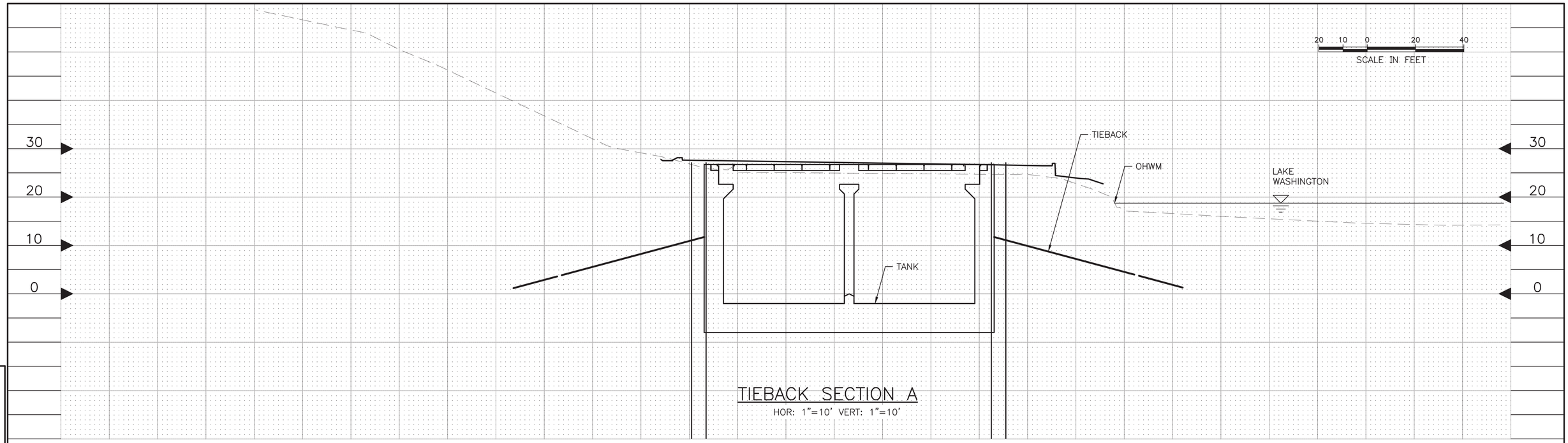

TIEBACK SECTION A

HOR: 1"=10' VERT: 1"=10'

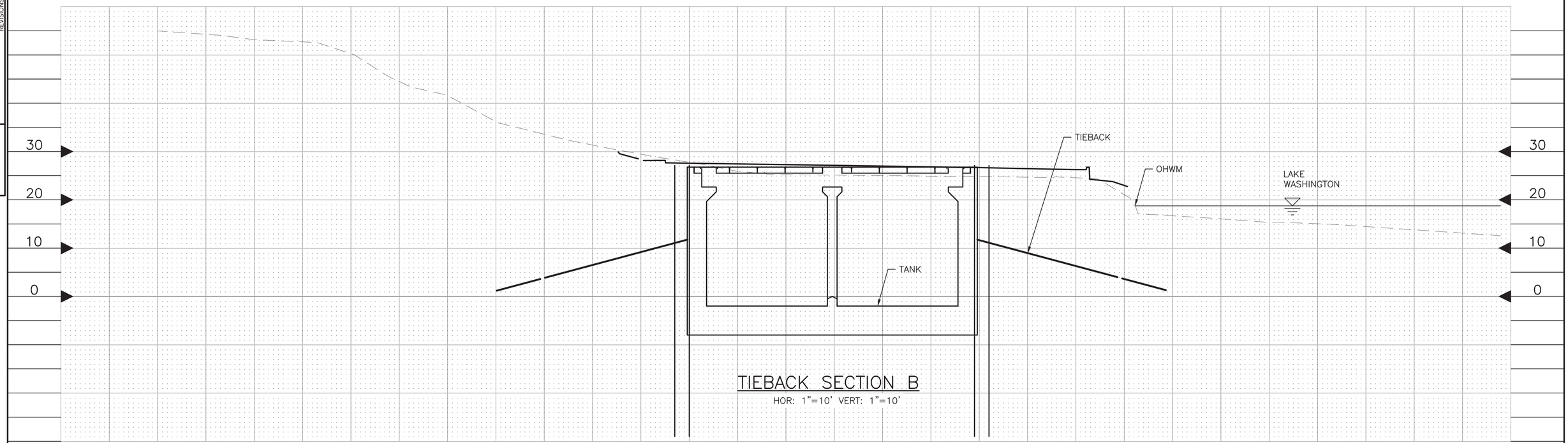

TIEBACK SECTION B

HOR: 1"=10' VERT: 1"=10'

VAULT SERIAL NO.	DATE	MARK	NATURE REVISIONS	MADE	CHK'D	REV'D

MUP SUBMITTAL

CSO FACILITY 8A – SHORING SECTION

HDR Engineering, Inc.

CIVILTECH engineering

0 ½ 1
IF THIS BAR DOES NOT MEASURE 1" THEN DRAWING IS NOT PLOTTED TO ORIGINAL SCALE.

APPROVED FOR ADVERTISING
NANCY LOCKE
DEPARTMENT OF FINANCE & ADMINISTRATIVE SERVICES
SEATTLE, WASHINGTON 20

BY:
PURCHASING & CONTRACTING SERVICES DIRECTOR

NAME OR INITIALS AND DATE
DESIGNED
CHECKED
DRAWN
CHECKED

INITIALS AND DATE
REVIEWED:
DES. CONST.
SDOT PROJ. MGR.
RECEIVED
REVISED AS BUILT

ALL WORK SHALL BE DONE IN ACCORDANCE WITH THE CITY OF SEATTLE STANDARD PLANS AND SPECIFICATIONS AND OTHER DOCUMENTS CALLED FOR IN SECTION 0-02.3 OF THE PROJECT MANUAL.

ENGINEER'S NAME
STATE OF WASHINGTON
REGISTERED
PROFESSIONAL ENGINEER

Seattle Public Utilities

City of Seattle
Ray Hoffman, Director

ORDINANCE NO. APPROVED
FUND:
SCALE: H. 1"=20', V. 1"=20' INSPECTOR'S BOOK

HENDERSON NORTH
CSO REDUCTION

JOB NO. PC C304102
R/W
CO C304102
VAULT PLAN NO.

SHEET 320 OF 320

C:\pwworking\sea\d1024950\SHOR-Figure1.dwg
pwitkem Dec-03-13 11:37am